2N5191
2N5192

NPN power transistors

Features

- NPN transistors

Applications

- Linear and switching industrial equipment

Description

The devices are manufactured in Planar technology with “Base Island” layout. The resulting transistor shows exceptional high gain performance coupled with very low saturation voltage. The PNP type of 2N5192 is 2N5195.

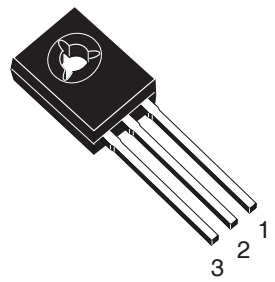

SOT-32

Figure 1. Internal schematic diagram

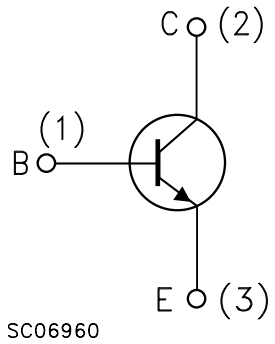

Table 1. Devices summary

Order code	Marking	Package	Packaging
2N5191	2N5191	SOT-32	Tube
2N5192	2N5192	SOT-32	Tube

1 Electrical ratings

Table 2. Absolute maximum rating

Symbol	Parameter	Value		Unit
		2N5191	2N5192	
V_{CBO}	Collector-base voltage (I_E = 0)	60	80	V
V_{CEO}	Collector-base voltage (I_B = 0)	60	80	V
V_{EBO}	Emitter-base voltage (I_C = 0)	5		V
I_C	Collector current	4		A
I_{CM}	Collector peak current	7		A
I_B	Base current	1		A
P_{TOT}	Total dissipation at T_{case} = 25°C	40		W
T_{stg}	Storage temperature	-65 to 150		°C
T_J	Max. operating junction temperature	150		°C

2 Electrical characteristics

(T_{case} = 25°C unless otherwise specified)

Table 3. Electrical characteristics

Symbol	Parameter	Test Conditions	Min.	Typ.	Max.	Unit
I_{CBO}	Collector cut-off current (I_E = 0)	V_{CB} = rated V_{CBO}			0.1	mA
I_{CEX}	Collector cut-off current (V_{BE} = -1.5V)	V_{CE} = rated V_{CEO} V_{CE} = rated V_{CEO} T_c=125°C			0.1 2	mA mA
I_{CEO}	Collector cut-off current (I_B = 0)	V_{CE} = rated V_{CEO}			1	mA
I_{EBO}	Emitter cut-off current (I_C = 0)	V_{EB} = 5V			1	mA
$V_{CEO(sus)}$ (1)	Collector-emitter sustaining voltage (I_B = 0)	I_C =100mA for 2N5191 for 2N5192	 60 80			 V V
$V_{CE(sat)}$ (1)	Collector-emitter saturation voltage	I_C = 1.5A I_B = 0.15A I_C = 4A I_B = 1A			0.6 1.4	V V
V_{BE} (1)	Base-emitter voltage	I_C = 1.5A V_{CE} = 2V			1.2	V
h_{FE}	DC current gain	I_C = 1.5A V_{CE} =2V for 2N5191 for 2N5192 I_C =4A V_{CE} =2V for 2N5191 for 2N5192	 25 20 10 7		 100 80	

Note (1) Pulsed duration = 300 µs, duty cycle ≤1.5%

2.1 Electrical characteristic (curves)

Figure 2. DC current gain

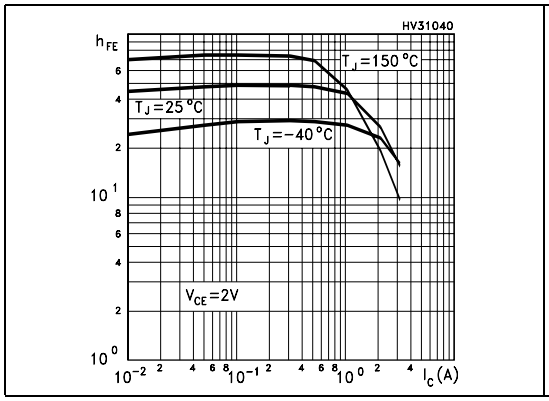

Figure 3. DC current gain

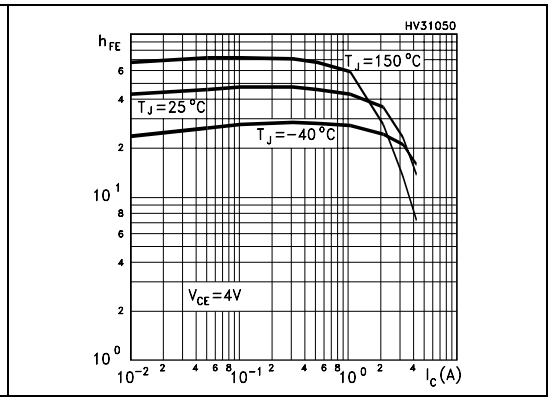

Figure 4. Collector-emitter saturation voltage

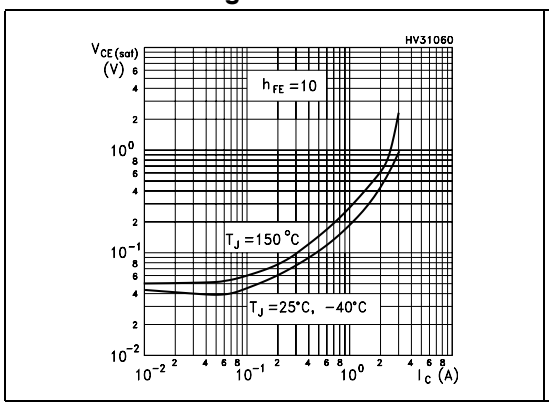

Figure 5. Base-emitter saturation voltage

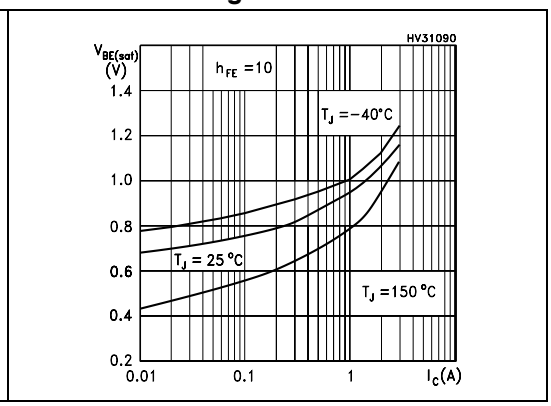

Figure 6. Base-emitter on voltage

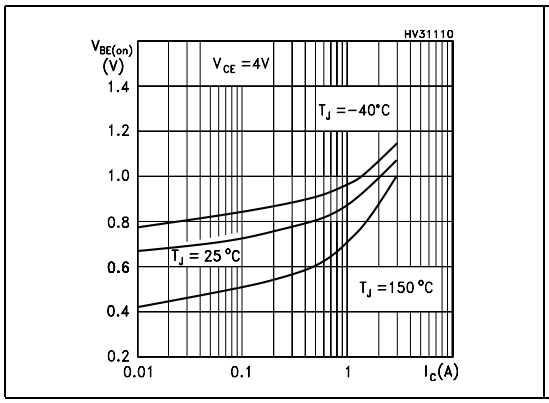

Figure 7. Resistive load switching time

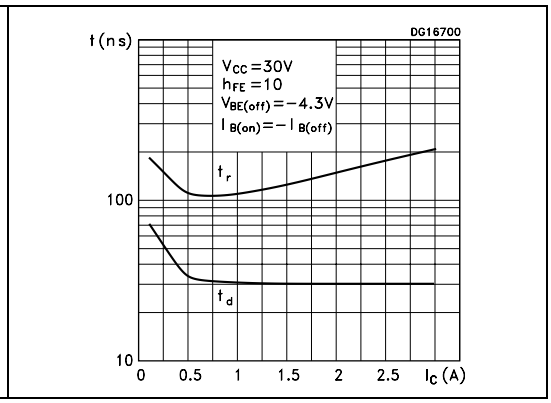

Figure 8. Resistive load switching time

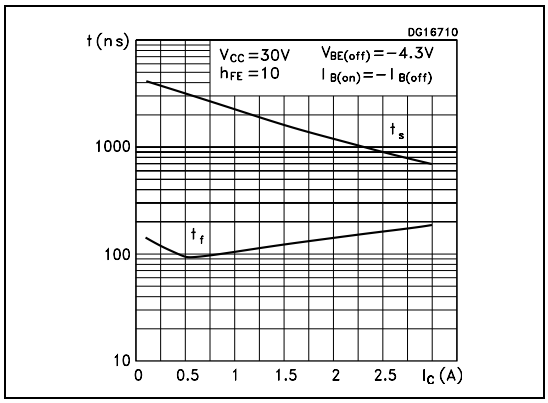

2.2 Test circuit

Figure 9. Resistive load switching test circuit

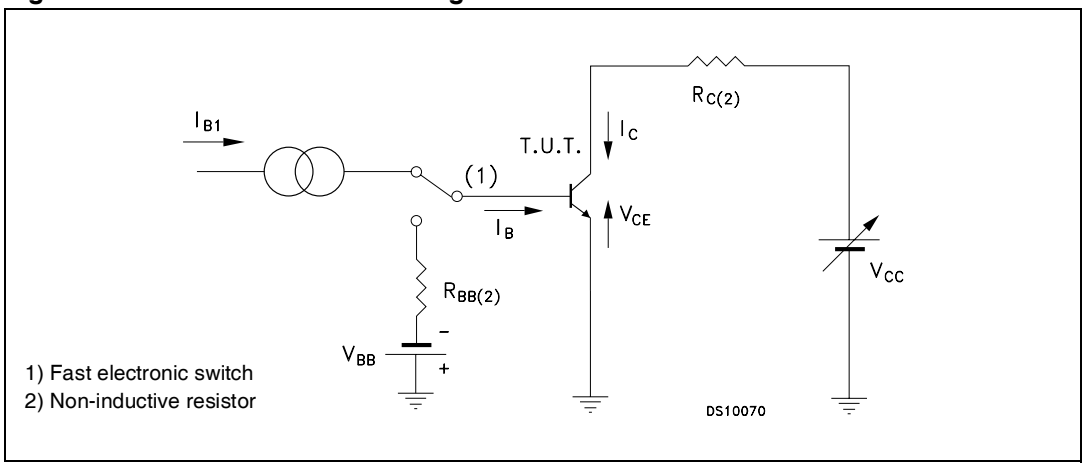

3 Package mechanical data

In order to meet environmental requirements, ST offers these devices in ECOPACK® packages. These packages have a Lead-free second level interconnect. The category of second level interconnect is marked on the package and on the inner box label, in compliance with JEDEC Standard JESD97. The maximum ratings related to soldering conditions are also marked on the inner box label. ECOPACK is an ST trademark. ECOPACK specifications are available at: www.st.com

SOT-32 (TO-126) MECHANICAL DATA

DIM.	mm.		
	MIN.	TYP	MAX.
A	2.4		2.9
B	0.64		0.88
B1	0.39		0.63
D	10.5		11.05
E	7.4		7.8
e	2.04	2.29	2.54
e1	4.07	4.58	5.08
L	15.3		16
P	2.9		3.2
Q		3.8	
Q1	1		1.52
H2		2.15	
I		1.27	

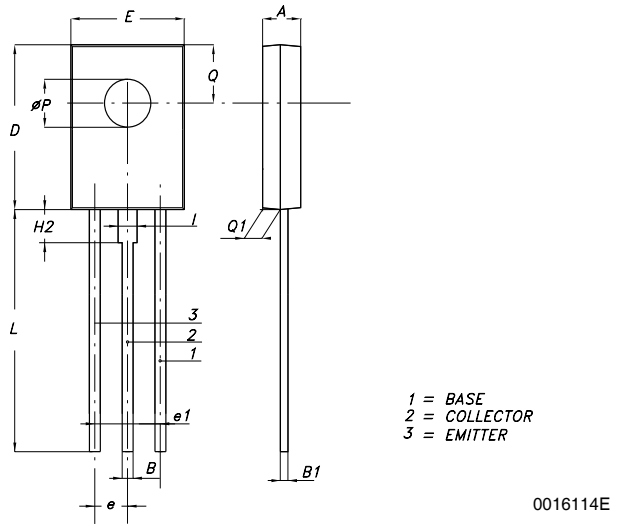

4 Revision history

Table 4. Revision history

Date	Revision	Changes
01-Dec-2000	1	Initial release.
14-Jan-2004	2	Technical migration from ST-Press to EDOCS
28-Jun-2007	3	Figures 2,3,4,5,6,7, 8 and figure 9 have been added.

Please Read Carefully:

Information in this document is provided solely in connection with ST products. STMicroelectronics NV and its subsidiaries (“ST”) reserve the right to make changes, corrections, modifications or improvements, to this document, and the products and services described herein at any time, without notice.

All ST products are sold pursuant to ST’s terms and conditions of sale.

Purchasers are solely responsible for the choice, selection and use of the ST products and services described herein, and ST assumes no liability whatsoever relating to the choice, selection or use of the ST products and services described herein.

No license, express or implied, by estoppel or otherwise, to any intellectual property rights is granted under this document. If any part of this document refers to any third party products or services it shall not be deemed a license grant by ST for the use of such third party products or services, or any intellectual property contained therein or considered as a warranty covering the use in any manner whatsoever of such third party products or services or any intellectual property contained therein.

UNLESS OTHERWISE SET FORTH IN ST’S TERMS AND CONDITIONS OF SALE ST DISCLAIMS ANY EXPRESS OR IMPLIED WARRANTY WITH RESPECT TO THE USE AND/OR SALE OF ST PRODUCTS INCLUDING WITHOUT LIMITATION IMPLIED WARRANTIES OF MERCHANTABILITY, FITNESS FOR A PARTICULAR PURPOSE (AND THEIR EQUIVALENTS UNDER THE LAWS OF ANY JURISDICTION), OR INFRINGEMENT OF ANY PATENT, COPYRIGHT OR OTHER INTELLECTUAL PROPERTY RIGHT.

UNLESS EXPRESSLY APPROVED IN WRITING BY AN AUTHORIZE REPRESENTATIVE OF ST, ST PRODUCTS ARE NOT RECOMMENDED, AUTHORIZED OR WARRANTED FOR USE IN MILITARY, AIR CRAFT, SPACE, LIFE SAVING, OR LIFE SUSTAINING APPLICATIONS, NOR IN PRODUCTS OR SYSTEMS, WHERE FAILURE OR MALFUNCTION MAY RESULT IN PERSONAL INJURY, DEATH, OR SEVERE PROPERTY OR ENVIRONMENTAL DAMAGE. ST PRODUCTS WHICH ARE NOT SPECIFIED AS “AUTOMOTIVE GRADE” MAY ONLY BE USED IN AUTOMOTIVE APPLICATIONS AT USER’S OWN RISK.

Resale of ST products with provisions different from the statements and/or technical features set forth in this document shall immediately void any warranty granted by ST for the ST product or service described herein and shall not create or extend in any manner whatsoever, any liability of ST.

ST and the ST logo are trademarks or registered trademarks of ST in various countries.

Information in this document supersedes and replaces all information previously supplied.

The ST logo is a registered trademark of STMicroelectronics. All other names are the property of their respective owners.

© 2007 STMicroelectronics - All rights reserved

STMicroelectronics group of companies

Australia - Belgium - Brazil - Canada - China - Czech Republic - Finland - France - Germany - Hong Kong - India - Israel - Italy - Japan - Malaysia - Malta - Morocco - Singapore - Spain - Sweden - Switzerland - United Kingdom - United States of America

www.st.com