End of Life

PRM® Regulator

P036F048T12AL

Non-isolated Regulator

Features

- 36 V input VI Chip® PRM
- Vin range 18 – 60 Vdc
- High density – 407 W/in³
- Small footprint – 1.1 in²
- Low weight – 0.5 oz (15 g)
- Adaptive Loop feedback
- ZVS buck-boost regulator
- 1.35 MHz switching frequency
- 95% efficiency
- 125˚C operation (Tj)

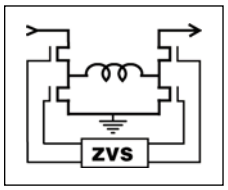

©

Vin = 18 – 60 Vdc
V_f = 26 – 55 Vdc
P_f = 120 W
I_f = 2.5 A

Product Description

The VI Chip regulator is a very efficient non-isolated regulator capable of both boosting and bucking a wide range input voltage. It is specifically designed to provide a controlled Factorized Bus distribution voltage for powering downstream VTM Transformer — fast, efficient, isolated, low noise Point-of-Load (POL) converters. In combination, PRMs and VTMs form a complete DC-DC converter subsystem offering all of the unique benefits of Vicor's Factorized Power Architecture™ (FPA)™: high density and efficiency; low noise operation; architectural flexibility; extremely fast transient response; and elimination of bulk capacitance at the Point-of-Load (POL).

In FPA systems, the POL voltage is the product of the Factorized Bus voltage delivered by the PRM and the "K-factor" (the fixed voltage transformation ratio) of a downstream VTM. The PRM controls the Factorized Bus voltage to provide regulation at the POL. Because VTMs perform true voltage division and current multiplication, the Factorized Bus voltage may be set to a value that is substantially higher than the bus voltages typically found in "intermediate bus" systems, reducing distribution losses and enabling use of narrower distribution bus traces. A PRM-VTM chip set can provide up to 100 A, or 115 W at a FPA system density of 169 A/in³, or 195 W/in³ — and because the PRM can be located, or "factorized," remotely from the POL, these power densities can be effectively doubled.

The PRM described in this data sheet features a unique "Adaptive Loop" compensation feedback: a single wire alternative to traditional remote sensing and feedback loops that enables precise control of an isolated POL voltage without the need for either a direct connection to the load or for noise sensitive, bandwidth limiting, isolation devices in the feedback path.

Absolute Maximum Ratings

Parameter	Values	Unit	Notes
+In to -In	-1.0 to 85.0	Vdc	
PC to -In	-0.3 to 6.0	Vdc	
PR to -In	-0.3 to 9.0	Vdc	
IL to -In	-0.3 to 6.0	Vdc	
VC to -In	-0.3 to 18.0	Vdc	
+Out to -Out	-0.3 to 59	Vdc	
SC to -Out	-0.3 to 3.0	Vdc	
VH to -Out	-0.3 to 9.5	Vdc	
OS to -Out	-0.3 to 9.0	Vdc	
CD to -Out	-0.3 to 9.0	Vdc	
SG to -Out	100	mA	
Continuous output current	2.5	Adc	
Continuous output power	120	W	
Case temperature during reflow	245	°C	MSL 4 (Datecode 1528 and later)
Operating junction temperature	-40 to 125	°C	T-Grade
Storage temperature	-40 to 125	°C	T-Grade

DC-DC Converter

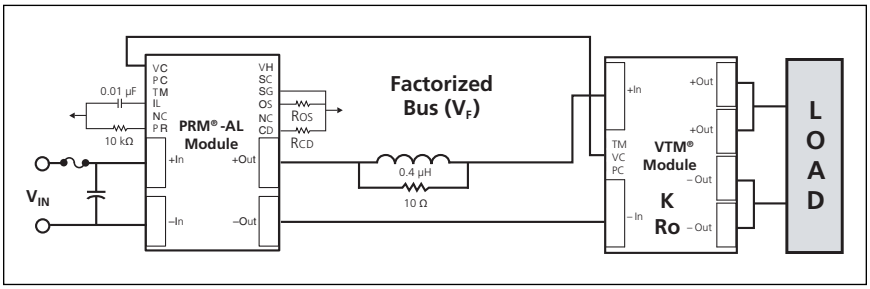

The P036F048T12AL is used with any 048 input series VTM to provide a regulated and isolated output.

General Specifications

Part Numbering

P	036	F	048	T	12	AL
Regulator	Input Voltage Designator	Configuration F = J-lead T = Through hole	Nominal Factorized Bus Voltage	Product Grade Temperatures (°C) Grade Storage Operating (T_J) T -40 to125 -40 to125	Output Power Designator (=P_f /10)	AL = Adaptive Loop

Overview of Adaptive Loop Compensation

Adaptive Loop compensation, illustrated in Figure 1, contributes to the bandwidth and speed advantage of Factorized Power. The PRM monitors its output current and automatically adjusts its output voltage to compensate for the voltage drop in the output resistance of the VTM. R_{OS} sets the desired value of the VTM output voltage, Vout; R_{CD} is set to a value that compensates for the output resistance of the VTM (which, ideally, is located at the point of load). For selection of R_{OS} and R_{CD}, refer to Table 1 below or Page 9.

The VI Chip's bi-directional VC port :

1. Provides a wake up signal from the PRM to the VTM that synchronizes the rise of the VTM output voltage to that of the PRM.
2. Provides feedback from the VTM to the PRM to enable the PRM to compensate for the voltage drop in VTM output resistance, R_O.

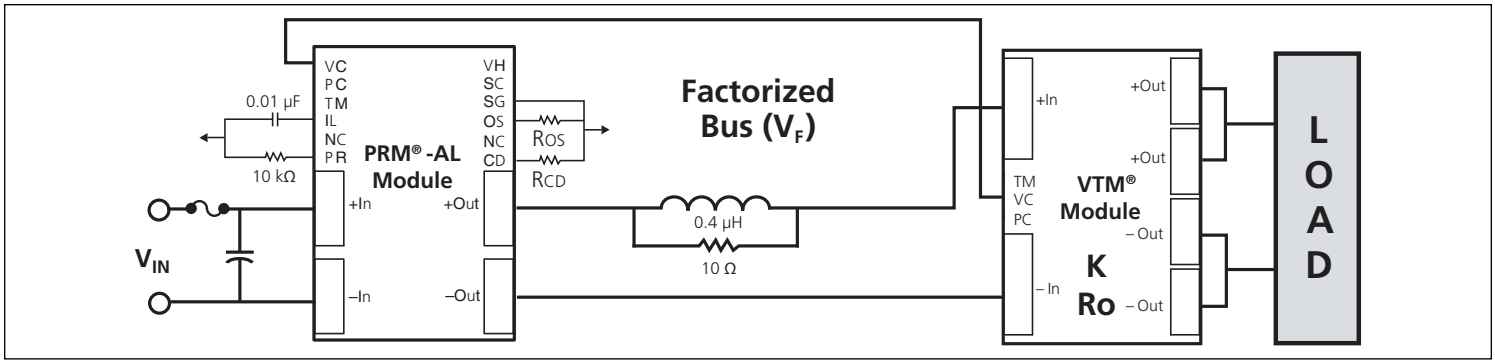

Figure 1 *— With Adaptive Loop control, the output of the VTM is regulated over the load current range with only a single interconnect between the PRM and VTM and without the need for isolation in the feedback path.*

Desired Load Voltage (Vdc)	VTM P/N(1)	Max VTM Output Current (A)(2)	R_{OS} (kΩ)(3)	R_{CD} (Ω)(3)
1.0	V048F015T100	100	3.57	26.1
1.2	V048F015T100	100	2.94	32.4
1.5	V048F015T100	100	2.37	39.2
1.8	V048F020T080	80	2.61	35.7
2.0	V048F020T080	80	2.37	39.2
3.0	V048F030T070	70	2.37	39.2
3.3	V048F040T050	50	2.89	32.6
5.0	V048F060T040	40	2.87	33.2
8.0	V048F080T030	30	2.37	32.9
9.6	V048F096T025	25	2.37	32.9
10	V048F120T025	25	2.86	32.9
12	V048F120T025	25	2.37	39.2
15	V048F160T015	15	2.49	37.4
24	V048F240T012	12.5	2.37	39.2
28	V048F320T009	9.4	2.74	35.7
36	V048F480T006	6.3	3.16	30.1
48	V048F480T006	6.3	2.37	39.2

Note:

(1) See Table 2 on page 9 for nominal Vout range and K factors.

(2) See "PRM output power vs. VTM output power" on Page 10

(3) 1% precision resistors recommended

Table 1 *— Configure your Chip Set using the PRM-AL*

Electrical Specifications

VI Chip Regulator

Input Specs (Conditions are at 36 Vin, 48 Vf, full load, and 25°C ambient unless otherwise specified)

Parameter	Min	Typ	Max	Unit	Note
Input voltage range	18	36	60	Vdc	
Input dV/dt			1	V/µs	
Input undervoltage turn-on		17	17.6	Vdc	
Input undervoltage turn-off	15.2	15.9		Vdc	
Input overvoltage turn-on	60	62		Vdc	
Input overvoltage turn-off		63	65	Vdc	
Input quiescent current		0.5	1	mA	PC low
Input current		3.5		Adc	
Input reflected ripple current		586		mA p-p	See Figures 4 & 5
No load power dissipation		3	6	W	
Internal input capacitance		5		µF	Ceramic
Recommended external input capacitance		100		µF	See Figure 5 for input filter circuit. Source impedance dependent

Input Waveforms

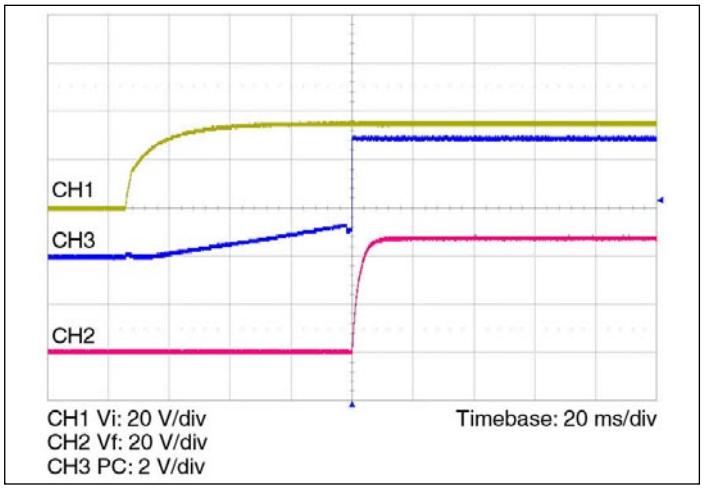

Figure 2 *— Vf and PC response from power up*

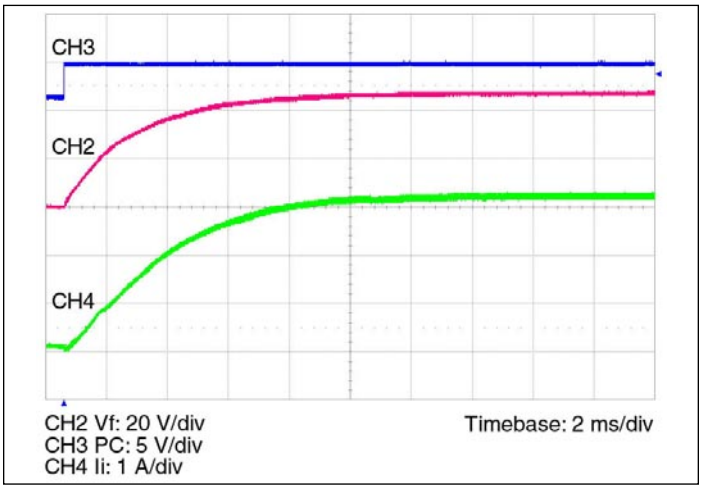

Figure 3 *— Vf turn-on waveform with inrush current – PC enabled*

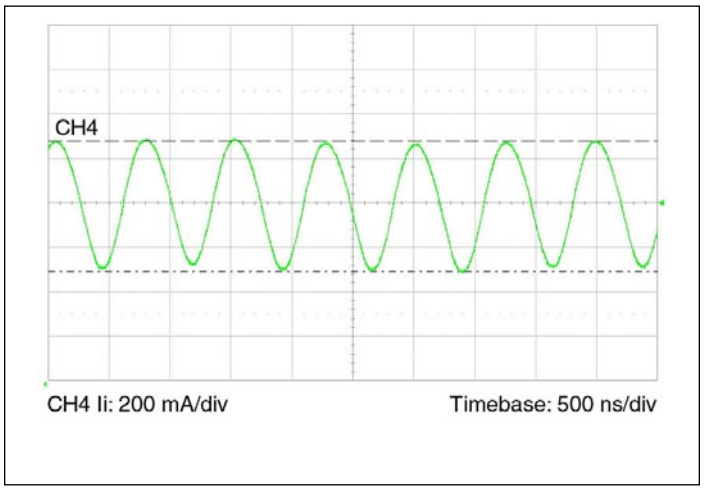

Figure 4 *— Input reflected ripple current*

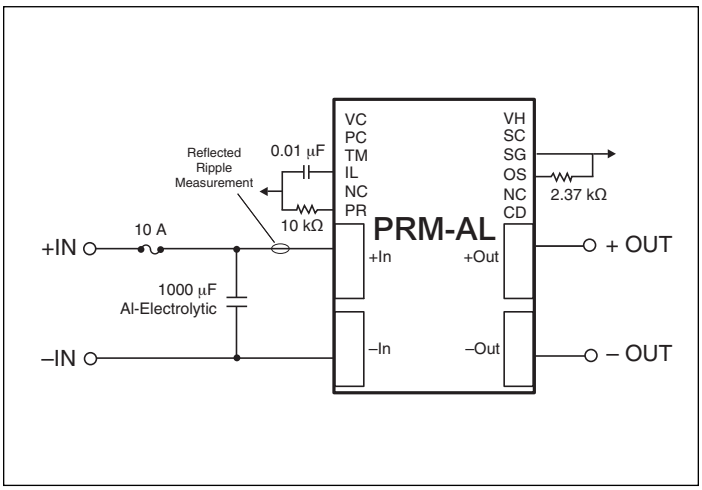

Figure 5 *— Input filter capacitor recommendation*

Electrical Specifications (continued)

VI Chip Regulator

Output Specs (Conditions are at 36 Vin, 48 Vf, full load, and 25°C ambient unless otherwise specified)

Parameter	Min	Typ	Max	Unit	Note
Output voltage range	26	48	55	Vdc	Factorized Bus voltage (Vf) set by R_{OS}
Output power	0		120	W	
Output current	0		2.5	Adc	
DC current limit	2.6	2.96	3.3	Adc	I_L pin floating
Average short circuit current			1.25	A	Auto recovery
Set point accuracy		1.5		%	
Line regulation		0.1	0.2	%	Low line to high line
Load regulation		0.1	0.2	%	No CD resistor
Load regulation (at VTM output)		1.0	2.0	%	Adaptive Loop
Current share accuracy		5	10	%	See description page 8
Efficiency					
Full load		95		%	See Figure 6,7 & 8
Output overvoltage set point	56		59.4	Vdc	
Output ripple voltage					
No external bypass		1.51	3.5	%	Factorized Bus, see Figure 13
With 10 µF capacitor		0.42	1.0	%	Factorized Bus, see Figure 14
Switching frequency	1.26	1.35	1.46	MHz	Fixed frequency
Output turn-on delay					
From application of power		74	250	ms	See Figure 2
From PC pin high		100		µs	See Figure 3
Internal output capacitance		5		µF	Ceramic
Factorized Bus capacitance			47	µF	

Efficiency Graphs

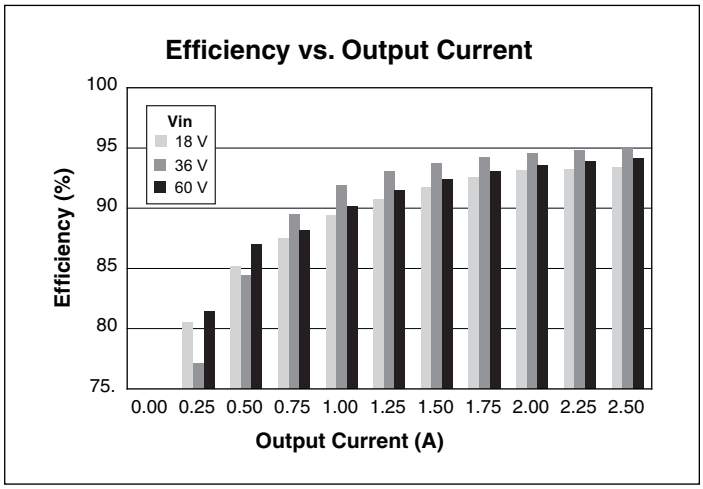

Figure 6 *— Efficiency vs. output current at 48 Vf*

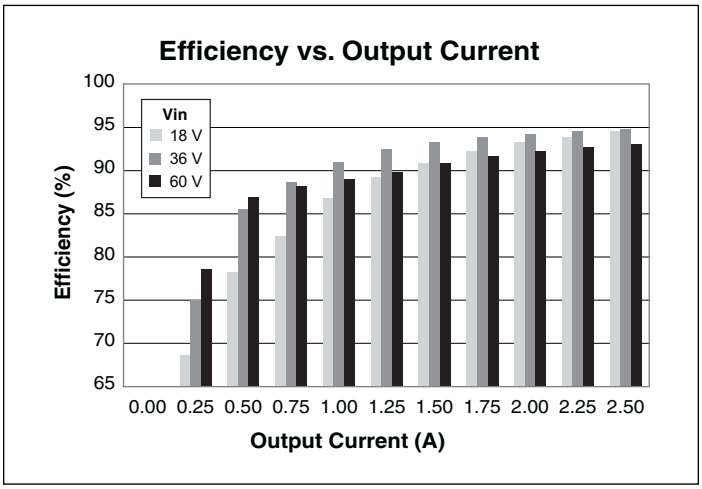

Figure 7 *— Efficiency vs. output current at 36 Vf*

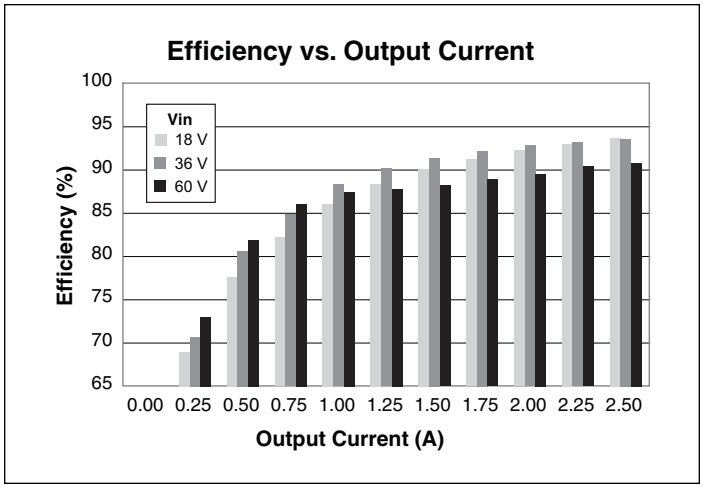

Figure 8 *— Efficiency vs. output current at 26 Vf*

Electrical Specifications (continued)

VI Chip Regulator

Output Waveforms

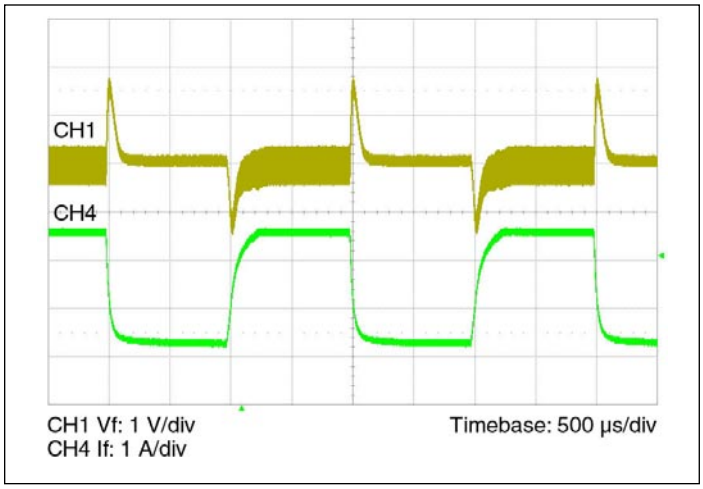

Figure 9 *— Transient response; PRM alone 36 Vin, 0–2.5–0 A no load capacitance, local loop and 48 Vf*

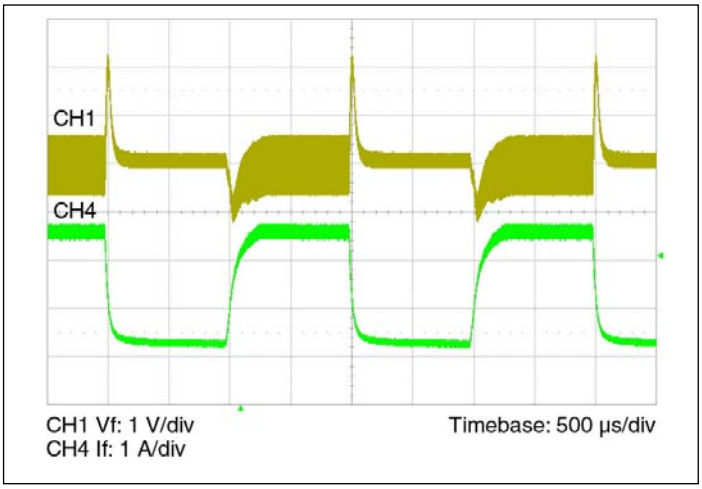

Figure 10 *— Transient response; PRM alone 18 Vin, 0–2.5–0 A no load capacitance, local loop and 48 Vf*

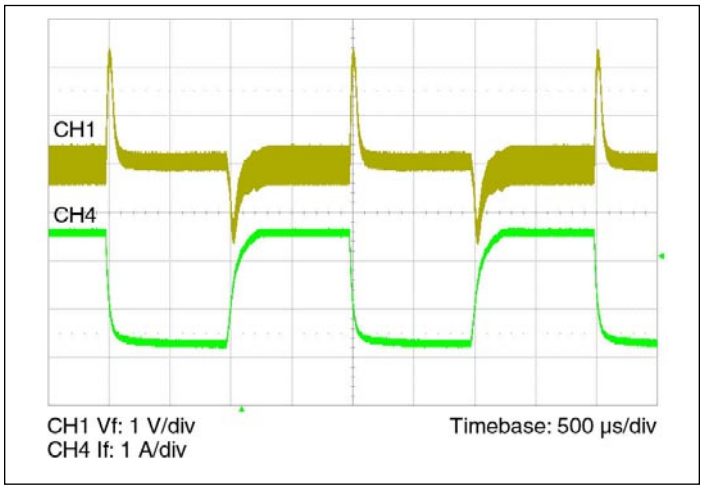

Figure 11 *— Transient response; PRM alone 60 Vin, 0–2.5–0 A no load capacitance, local loop and 48 Vf*

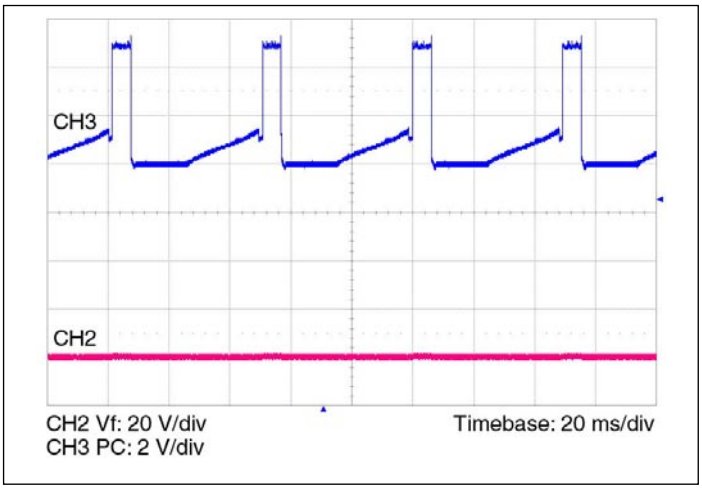

Figure 12 *— PC during fault – frequency will vary as a function of line voltage*

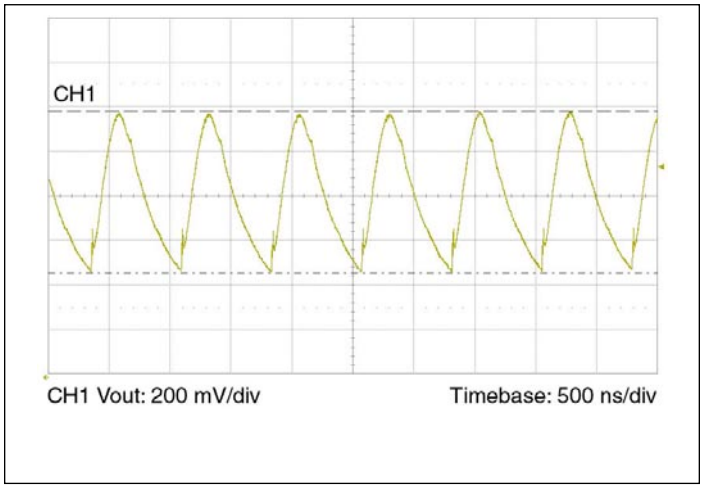

Figure 13 *— Output ripple full load no bypass capacitance. Vf = 48 Vdc*

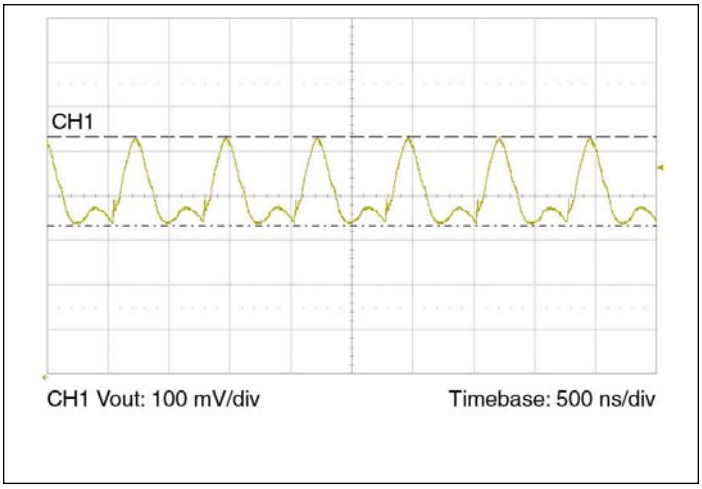

Figure 14 *— Output ripple full load 10µF bypass capacitance. Vf = 48 Vdc*

Electrical Specifications (continued)

VI Chip Regulator

Auxiliary Pins (Conditions are at 36 Vin, 48 Vf, full load, and 25°C ambient unless otherwise specified)

Parameter	Min	Typ	Max	Unit	Note
VC (VTM Control)					
Pulse width	8	12	18	ms	
Peak voltage	12	14	18	V	Referenced to –Out
PC (Primary Control)					
DC voltage	4.8	5.0	5.2	Vdc	Referenced to –In
Module disable voltage	2.3	2.4		Vdc	Referenced to –In
Module enable voltage		2.5	2.6	Vdc	
Disable hysteresis		100		mV	
Current limit		1.75	1.90	mA	Source only after start up; not to be used for aux. supply; 100 kΩ minimum load impedance to assure start up.
Enable delay time		100		µs	
Disable delay time		1		µs	
IL (Current Limit Adjust)					
Voltage		1		V	
Accuracy		± 15		%	Based on DC current limit set point
PR (Parallel Port)					
Voltage	0.5		3.5	V	Referenced to SG; See description page 8
Source current	1			mA	
External capacitance			100	pF	
VH (Auxiliary Voltage)					Typical internal bypass C=0.1 µF
Range	8.7	9.0	9.3	Vdc	Maximum external C=0.1 µF, referenced to SG
Regulation		0.04		%/mA	
Current			5	mA p	See description page 8
SC (Secondary Control)					
Voltage	1.23	1.24	1.25	Vdc	Referenced to SG
Internal capacitance		0.22		µF	
External capacitance			0.7	µF	
OS (Output Set)					
Set point accuracy		± 1.5		%	Includes 1% external resistor
Reference offset		± 4		mV	
CD (Compensation Device)					
External resistance	20			Ω	Omit resistor for regulation at output of PRM

General Specs

Parameter	Min	Typ	Max	Unit	Note
MTBF					
MIL-HDBK-217F		2.2		Mhrs	25°C, GB
Agency approvals		cTÜVus			UL/CSA 60950-1, EN60950-1
		CE Marked for Low Voltage Directive and RoHS Recast Directive, as applicable			
Mechanical parameters					See Mechanical Drawings, Figures 19 – 22
Weight		0.53/15		oz/g	
Dimensions					
Length		1.28/32,5		in/mm	
Width		0.87/22,0		in/mm	
Height		0.265/6,73		in/mm	
Thermal					
Over temperature shutdown	125	135	140	°C	Junction temperature
Thermal capacity		9.3		Ws/°C	
Junction-to-case thermal impedance ($R_{\theta JC}$)		1.1		°C/W	
Junction-to-board thermal impedance ($R_{\theta JB}$)		2.1		°C/W	
Case-to-ambient		3.7		°C/W	With 0.25" heat sink @ 300 LFM

Pin / Control Functions

+In / -In DC Voltage Ports

The VI Chip maximum input voltage should not be exceeded. PRMs have internal over / undervoltage lockout functions that prevent operation outside of the specified input range. PRMs will turn on when the input voltage rises above its undervoltage lockout. If the input voltage exceeds the overvoltage lockout, PRMs will shut down until the overvoltage fault clears. PC will toggle indicating an out of bounds condition.

+Out / -Out Factorized Voltage Output Ports

These ports provide the Factorized Bus voltage output. The –Out port is connected internally to the –In port through a current sense resistor. The PRM has a maximum power and a maximum current rating and is protected if either rating is exceeded. Do not short –Out to –In.

VC – VTM Control

The VTM Control (VC) port supplies an initial V_{CC} voltage to downstream VTMs, enabling the VTMs and synchronizing the rise of the VTM output voltage to that of the PRM. The VC port also provides feedback to the PRM to compensate for voltage drop due to the VTM output resistance. The PRM's VC port should be connected to the VTM VC port. A PRM VC port can drive a maximum of two (2) VTM VC ports.

PC – Primary Control

The PRM voltage output is enabled when the PC pin is open circuit (floating). To disable the PRM output voltage, the PC pin is pulled low. Open collector optocouplers, transistors, or relays can be used to control the PC pin. When using multiple PRMs in a high power array, the PC ports should be tied together to synchronize their turn on. During an abnormal condition the PC pin will pulse (Fig.12) as the PRM initiates a restart cycle. This will continue until the abnormal condition is rectified. The PC should not be used as an auxiliary voltage supply, nor should it be switched at a rate greater than 1 Hz.

TM – Factory Use Only

IL – Current Limit Adjust

The PRM has a preset, maximum, current limit set point. The IL port may be used to reduce the current limit set point to a lower value. See "adjusting current limit" on page 10.

PR – Parallel Port

The PR port signal, which is proportional to the PRM output power, supports current sharing of two PRMs. To enable current sharing, PR ports should be interconnected. Steps should be taken to minimize coupling noise into the interconnecting bus. Terminate this port with a 10 k equivalent resistance to SG, e.g. 10 k for a single PRM, 20 k each for 2 PRMs in parallel, 30 k each for 3 PRMs in parallel etc.. Please consult Vicor Applications Engineering regarding additional considerations when paralleling more than two PRMs.

VH – Auxiliary Voltage

VH is a gated (e.g. mirrors PC), non-isolated, nominally 9 Volt, regulated DC voltage (see "Auxiliary Pins" specifications, on Page 7) that is referenced to SG. VH may be used to power external circuitry having a total current consumption of no more than 5 mA under either transient or steady state conditions including turn-on.

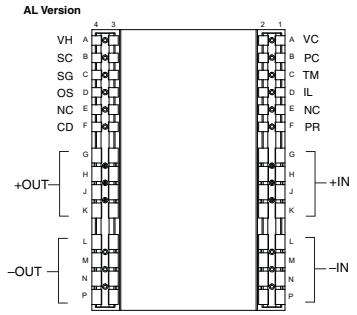

Signal Name	Designation
+In	G1-K1,G2-K2
–In	L1-P1, L2-P2
VC	A1,A2
PC	B1, B2
TM	C1, C2
IL	D1, D2
PR	F1, F2
VH	A3, A4
SC	B3, B4
SG	C3, C4
OS	D3, D4
CD	F3, F4
+Out	G3-K3, G4-K4
–Out	L3-P3, L4-P4

Figure 15 *— PRM pin configuration*

SC – Secondary Control

The load voltage may be controlled by connecting a resistor or voltage source to the SC port. The slew rate of the output voltage may be controlled by controlling the rate-of-rise of the voltage at the SC port (e.g., to limit inrush current into a capacitive load).

SG – Signal Ground

This port provides a low inductance Kelvin connection to –In and should be used as reference for the OS, CD, SC,VH and IL ports.

OS – Output Set

The application-specific value of the Factorized Bus voltage (Vf) is set by connecting a resistor between OS and SG. Resistor value selection is shown in Table 1 on Page 2, and described on Page 9. If no resistor is connected, the PRM output will be approximately one volt. If set resistor is not collocated with the PRM a load bypass capacitor of ~200 pF may be required.

CD – Compensation Device

Adaptive Loop control is configured by connecting an external resistor between the CD port and SG. Selection of an appropriate resistor value (see Equation 2 on Page 9 and Table 1 on Page 2) configures the PRM to compensate for voltage drops in the equivalent output resistance of the VTM and the PRM-VTM distribution bus. If no resistor is connected to CD, the PRM will be in Local Loop mode and will regulate the +Out / –Out voltage to a fixed value.

Application Information

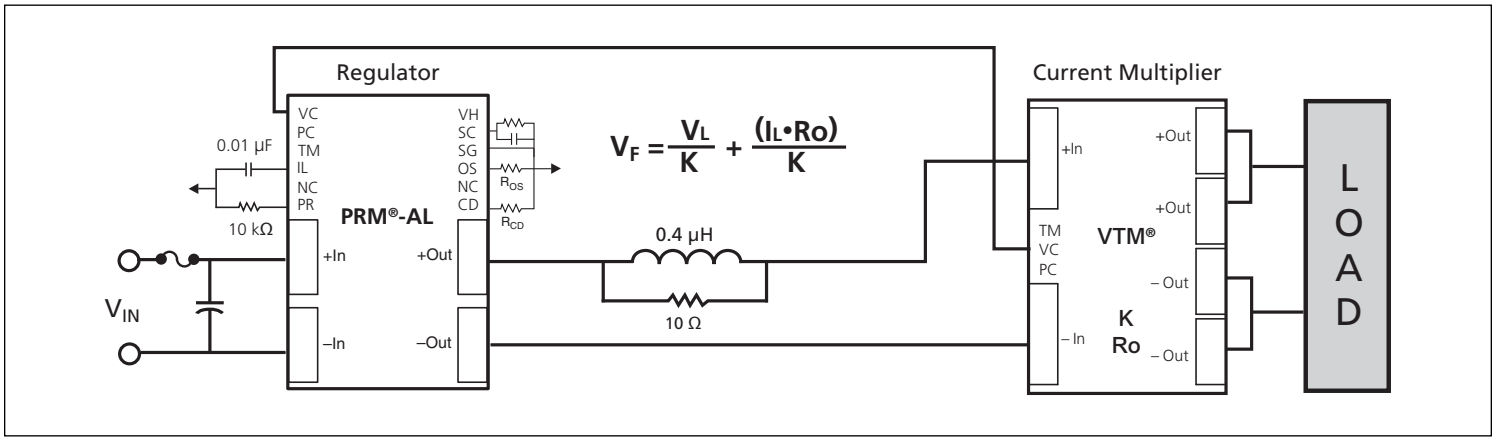

Figure 16 *— Adaptive Loop compensation with soft start using the SC port.*

Output Voltage Setting with Adaptive Loop

The equations for calculating R_{OS} and R_{CD} to set a VTM output voltage are:

$$R_{OS} = \frac{93100}{\left(\frac{V_L \bullet 0.8395}{K}\right) - 1} \qquad (1)$$

$$R_{CD} = \frac{91238}{R_{OS}} + 1 \qquad (2)$$

V_L = Desired load voltage

V_{OUT} = VTM output voltage

K = VTM transformation ratio
(available from appropriate VTM data sheet)

V_f = PRM output voltage, the Factorized Bus (see Figure 16)

R_O = VTM output resistance
(available from appropriate VTM data sheet)

I_L = Load Current
(actual current delivered to the load)

Output Voltage Trimming (optional)

After setting the output voltage from the procedure above the output may be margined down (26 Vf min) by a resistor from SC-SG using this formula:

$$R_d\Omega = \frac{10000\ V_{fd}}{V_{fs} - V_{fd}}$$

Where V_{fd} is the desired factorized bus and V_{fs} is the set factorized bus.

A low voltage source can be applied to the SC port to margin the load voltage in proportion to the SC reference voltage.

An external capacitor can be added to the SC port as shown in Figure 16 to control the output voltage slew rate for soft start.

Nominal Vout Range (Vdc)	VTM K Factor
0.8 ↔ 1.6	1/32
1.1 ↔ 2.2	1/24
1.6 ↔ 3.3	1/16
2.2 ↔ 4.4	1/12
3.3 ↔ 6.6	1/8
4.3 ↔ 8.8	1/6
6.5 ↔ 13.4	1/4
8.7 ↔ 17.9	1/3
13.0 ↔ 26.9	1/2
17.4 ↔ 36.0	2/3
26.0 ↔ 54.0	1

Table 2 *— 048 input series VTM K factor selection guide*

Application Information (continued)

OVP – Overvoltage Protection

The output overvoltage protection set point of the P036F048T12AL is factory preset for 56 V. If this threshold is exceeded the output shuts down and a restart sequence is initiated, also indicated by PC pulsing. If the condition that causes OVP is still present, the unit will again shut down. This cycle will be repeated until the fault condition is removed. The OVP set point may be set at the factory to meet unique high voltage requirements.

PRM Output Power Versus VTM Output Power

As shown in Figure 17, the P036F048T12AL is rated to deliver 2.5 A maximum, when it is delivering an output voltage in the range from 26 V to 48 V, and 120 W, maximum, when delivering an output voltage in the range from 48 V to 55 V. When configuring a PRM for use with a specific VTM, refer to the appropriate VTM data sheet. The VTM input power can be calculated by dividing the VTM output power by the VTM efficiency (available from the VTM data sheet). The input power required by the VTM should not exceed the output power rating of the PRM.

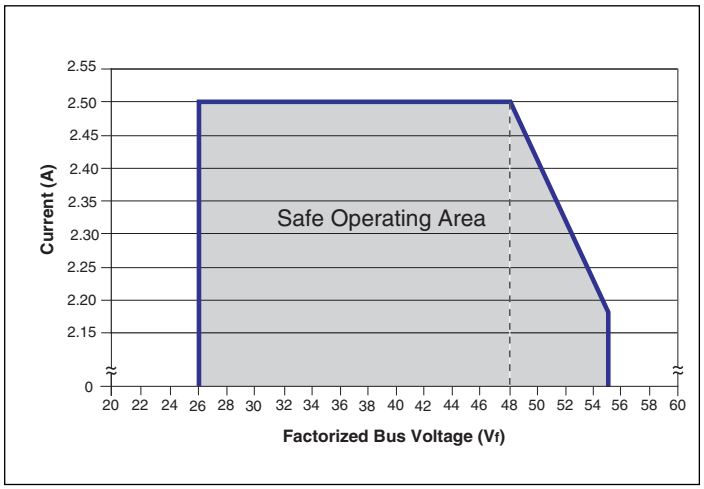

Figure 17 *— P036F048T12AL rating based on Factorized Bus voltage*

The Factorized Bus voltage should not exceed an absolute limit of 55 V, including steady state, ripple and transient conditions. Exceeding this limit may cause the internal OVP set point to be exceeded.

Parallel Considerations

The PR port is used to connect two PRMs in parallel to form a higher power array. When configuring arrays, PR port interconnection terminating impedance is 10 k to SG. See note Page 8 and refer to Application Note AN002. Additionally one PRM should be designated as the master while all other PRMs are set as slaves by shorting their SC pin to SG. The PC pins must be directly connected (no diodes) to assure a uniform start up sequence. Consult Vicor applications engineering for applications requiring more than two PRMs.

Adjusting Current Limit

The current limit can be lowered by placing an external resistor between the I_L and SG ports (see Figure 18 for resistor values). With the I_L port open-circuit, the current limit is preset to be within the range specified in the output specifications table on Page 4.

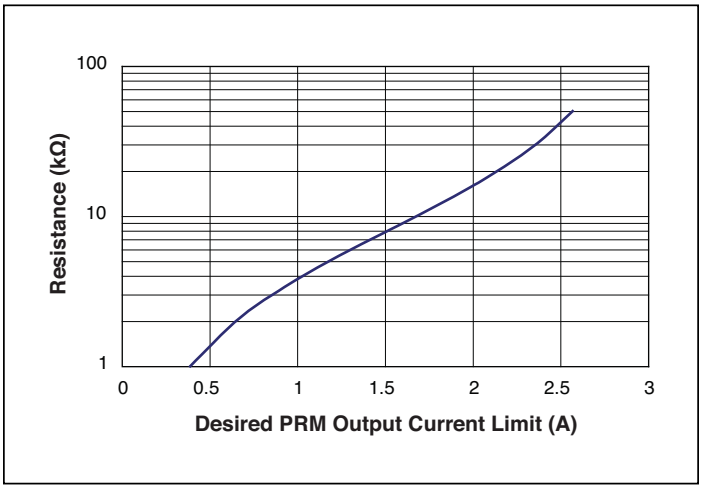

Figure 18 *— Calculated external resistor value for adjusting current limit, actual value may vary.*

Input Fuse Recommendations

A fuse should be incorporated at the input to the PRM, in series with the +In port. A fast acting fuse, NANO2 FUSE 451/453 Series 10 A 125 V, or equivalent, may be required to meet certain safety agency Conditions of Acceptability. Always ascertain and observe the safety, regulatory, or other agency specifications that apply to your specific application.

Product Safety Considerations

If the input of the PRM is connected to SELV or ELV circuits, the output of the PRM can be considered SELV or ELV respectively.
If the input of the PRM is connected to a centralized DC power system where the working or float voltage is above SELV, but less than or equal to 75 V, the input and output voltage of the PRM should be classified as a TNV-2 circuit and spaced 1.3 mm from SELV circuitry or accessible conductive parts according to the requirements of UL60950-1, CSA 22.2 60950-1, EN60950-1, and IEC60950-1.

Application Notes

For PRM and VI Chip application notes on soldering, board layout, and system design please click on the link below:

http://www.vicorpower.com/powerbench/applicationnotes

Applications Assistance

Please contact Vicor Applications Engineering for assistance, 1-800-927-9474, or email at apps@vicorpower.com.

Mechanical Drawings

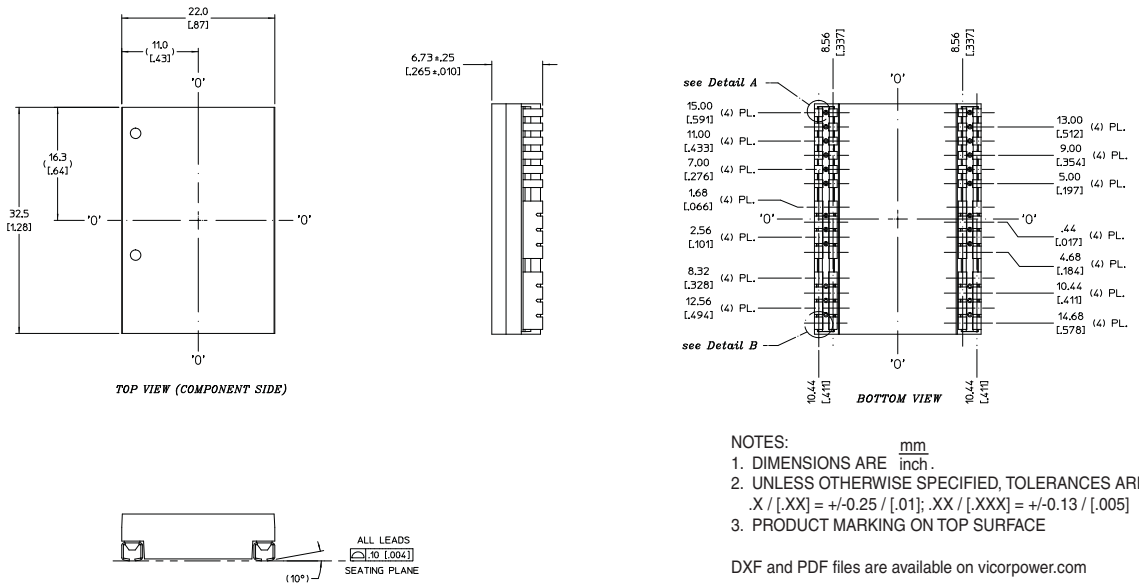

NOTES:
1. DIMENSIONS ARE mm/inch.
2. UNLESS OTHERWISE SPECIFIED, TOLERANCES ARE:
   .X / [.XX] = +/-0.25 / [.01]; .XX / [.XXX] = +/-0.13 / [.005]
3. PRODUCT MARKING ON TOP SURFACE

DXF and PDF files are available on vicorpower.com

Figure 19 — *PRM J-Lead mechanical outline; Onboard mounting*

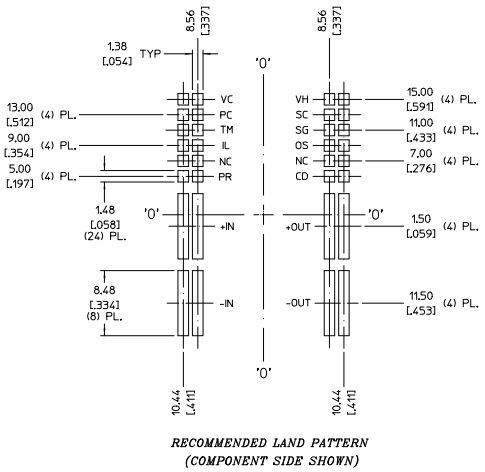

NOTES:
1. DIMENSIONS ARE mm/inch.
2. UNLESS OTHERWISE SPECIFIED, TOLERANCES ARE:
   .X / [.XX] = +/-0.25 / [.01]; .XX / [.XXX] = +/-0.13 / [.005]
3. PRODUCT MARKING ON TOP SURFACE

DXF and PDF files are available on vicorpower.com

Figure 20 — *PRM J-Lead PCB land layout information; Onboard mounting*

Mechanical Drawings (continued)

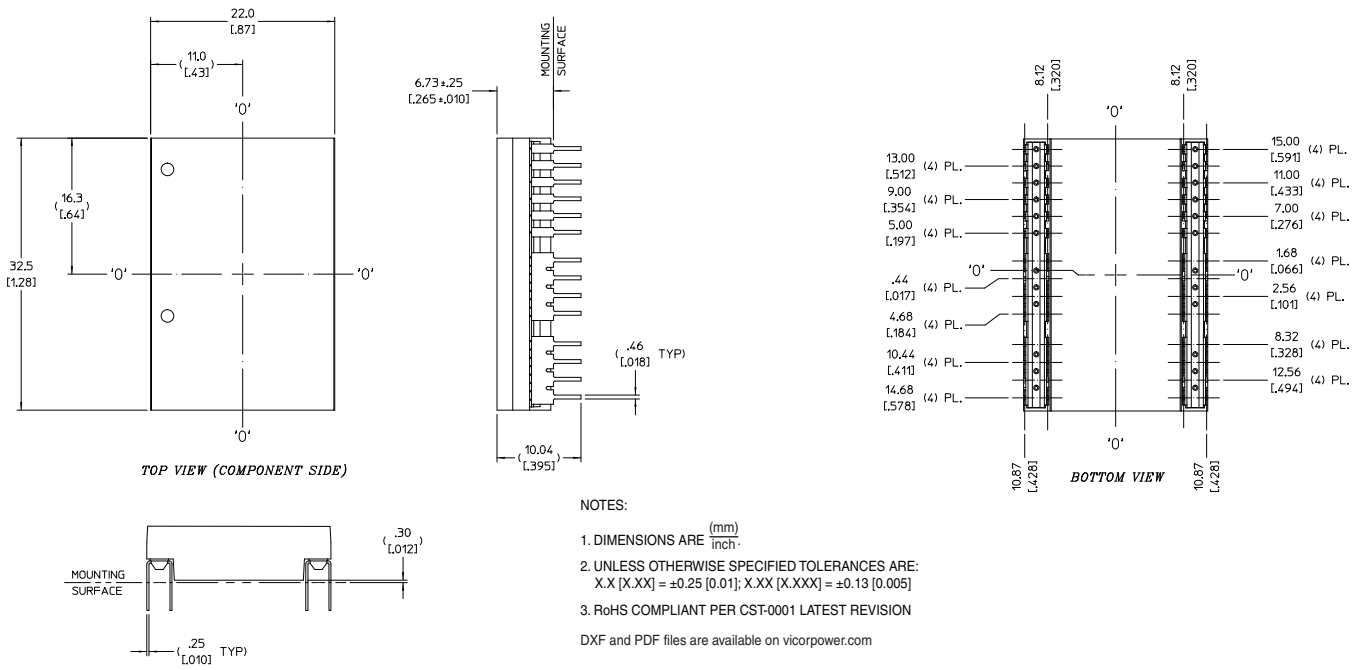

Figure 21 — *PRM Through-hole mechanical outline*

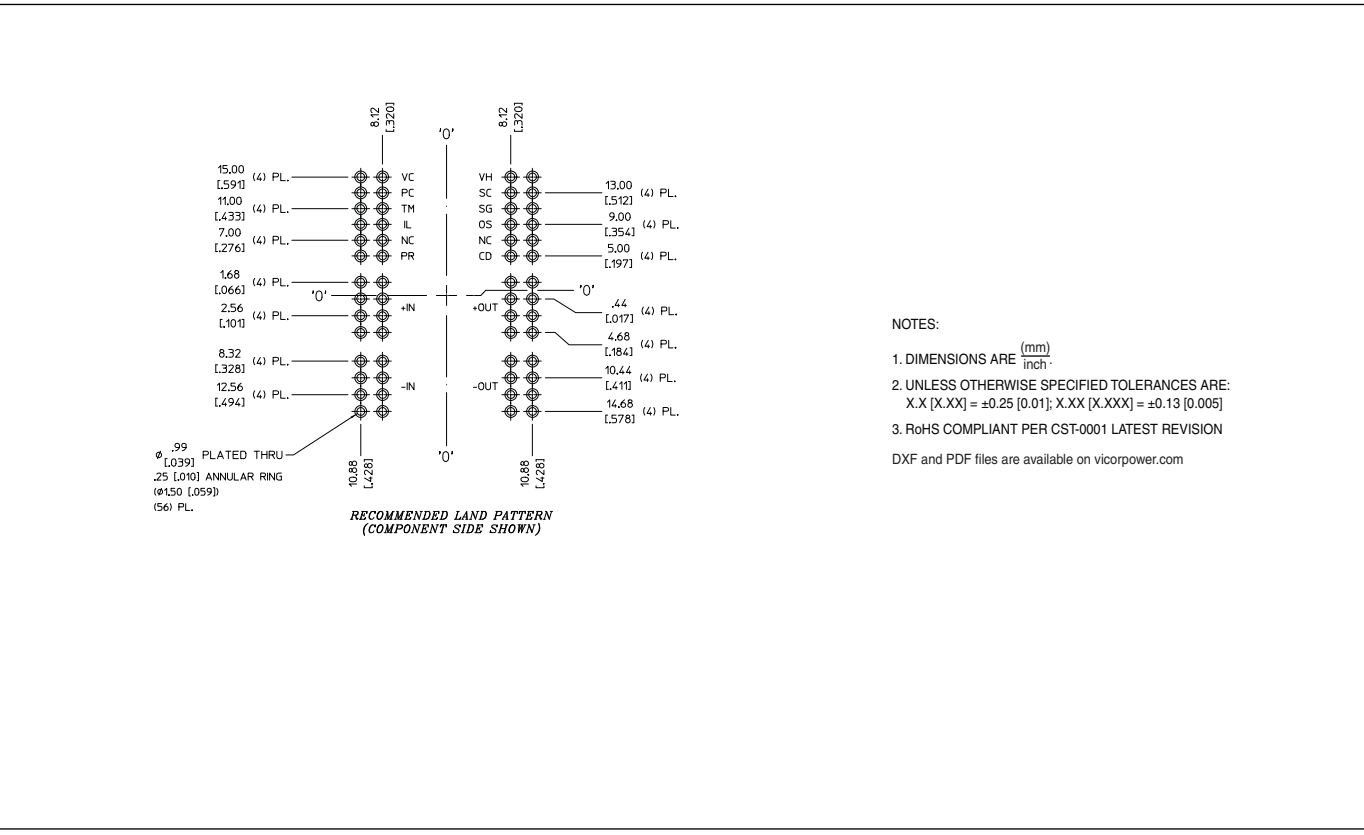

Figure 22 — *PRM Through-hole PCB layout information*

Configuration Options

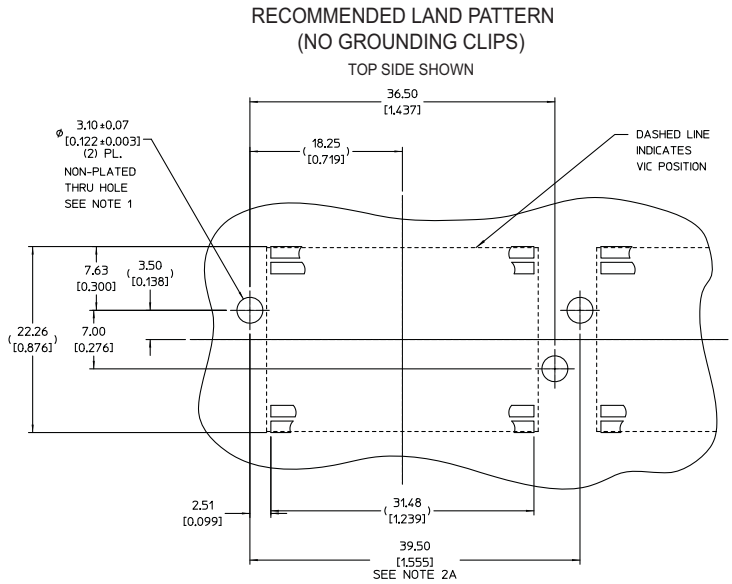

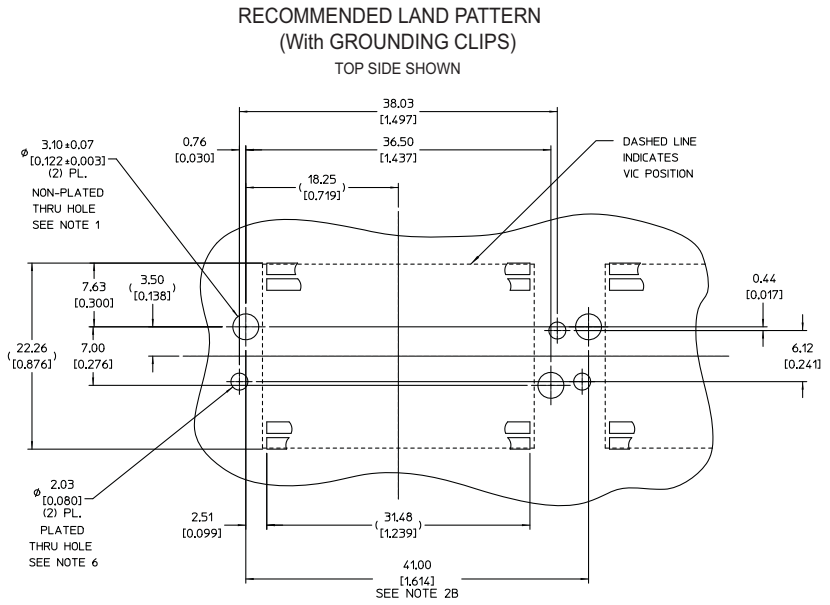

NOTES:

1. MAINTAIN 3.50 [0.138] DIA. KEEP-OUT ZONE FREE OF COPPER, ALL PCB LAYERS.
2. (A) MINIMUM RECOMMENDED PITCH IS 39.50 [1.555], THIS PROVIDES 7.00 [0.275] COMPONENT EDGE-TO-EDGE SPACING, AND 0.50 [0.020] CLEARANCE BETWEEN VICOR HEAT SINKS.

   (B) MINIMUM RECOMMENDED PITCH IS 41.00 [1.614], THIS PROVIDES 8.50 [0.334] COMPONENT EDGE-TO-EDGE SPACING, AND 2.00 [0.079] CLEARANCE BETWEEN VICOR HEAT SINKS.
3. VI CHIP® MODULE LAND PATTERN SHOWN FOR REFERENCE ONLY; ACTUAL LAND PATTERN MAY DIFFER. DIMENSIONS FROM EDGES OF LAND PATTERN TO PUSH-PIN HOLES WILL BE THE SAME FOR ALL FULL SIZE VI CHIP PRODUCTS.
4. RoHS COMPLIANT PER CST-0001 LATEST REVISION.
5. UNLESS OTHERWISE SPECIFIED:
   DIMENSIONS ARE MM [INCH].
   TOLERANCES ARE:
   X.X [X.XX] = ±0.3 [0.01]
   X.XX [X.XXX] = ±0.13 [0.005]
6. PLATED THROUGH HOLES FOR GROUNDING CLIPS (33855) SHOWN FOR REFERENCE. HEAT SINK ORIENTATION AND DEVICE PITCH WILL DICTATE FINAL GROUNDING SOLUTION.

Figure 23 *— Hole location for push pin heat sink relative to VI Chip*

Vicor's comprehensive line of power solutions includes high density AC-DC and DC-DC modules and accessory components, fully configurable AC-DC and DC-DC power supplies, and complete custom power systems.

Information furnished by Vicor is believed to be accurate and reliable. However, no responsibility is assumed by Vicor for its use. Vicor makes no representations or warranties with respect to the accuracy or completeness of the contents of this publication. Vicor reserves the right to make changes to any products, specifications, and product descriptions at any time without notice. Information published by Vicor has been checked and is believed to be accurate at the time it was printed; however, Vicor assumes no responsibility for inaccuracies. Testing and other quality controls are used to the extent Vicor deems necessary to support Vicor's product warranty. Except where mandated by government requirements, testing of all parameters of each product is not necessarily performed.
Specifications are subject to change without notice.

Vicor's Standard Terms and Conditions

All sales are subject to Vicor's Standard Terms and Conditions of Sale, which are available on Vicor's webpage or upon request.

Product Warranty

In Vicor's standard terms and conditions of sale, Vicor warrants that its products are free from non-conformity to its Standard Specifications (the "Express Limited Warranty"). This warranty is extended only to the original Buyer for the period expiring two (2) years after the date of shipment and is not transferable.
UNLESS OTHERWISE EXPRESSLY STATED IN A WRITTEN SALES AGREEMENT SIGNED BY A DULY AUTHORIZED VICOR SIGNATORY, VICOR DISCLAIMS ALL REPRESENTATIONS, LIABILITIES, AND WARRANTIES OF ANY KIND (WHETHER ARISING BY IMPLICATION OR BY OPERATION OF LAW) WITH RESPECT TO THE PRODUCTS, INCLUDING, WITHOUT LIMITATION, ANY WARRANTIES OR REPRESENTATIONS AS TO MERCHANTABILITY, FITNESS FOR PARTICULAR PURPOSE, INFRINGEMENT OF ANY PATENT, COPYRIGHT, OR OTHER INTELLECTUAL PROPERTY RIGHT, OR ANY OTHER MATTER.

This warranty does not extend to products subjected to misuse, accident, or improper application, maintenance, or storage. Vicor shall not be liable for collateral or consequential damage. Vicor disclaims any and all liability arising out of the application or use of any product or circuit and assumes no liability for applications assistance or buyer product design. Buyers are responsible for their products and applications using Vicor products and components. Prior to using or distributing any products that include Vicor components, buyers should provide adequate design, testing and operating safeguards.

Vicor will repair or replace defective products in accordance with its own best judgment. For service under this warranty, the buyer must contact Vicor to obtain a Return Material Authorization (RMA) number and shipping instructions. Products returned without prior authorization will be returned to the buyer. The buyer will pay all charges incurred in returning the product to the factory. Vicor will pay all reshipment charges if the product was defective within the terms of this warranty.

Life Support Policy

VICOR'S PRODUCTS ARE NOT AUTHORIZED FOR USE AS CRITICAL COMPONENTS IN LIFE SUPPORT DEVICES OR SYSTEMS WITHOUT THE EXPRESS PRIOR WRITTEN APPROVAL OF THE CHIEF EXECUTIVE OFFICER AND GENERAL COUNSEL OF VICOR CORPORATION. As used herein, life support devices or systems are devices which (a) are intended for surgical implant into the body, or (b) support or sustain life and whose failure to perform when properly used in accordance with instructions for use provided in the labeling can be reasonably expected to result in a significant injury to the user. A critical component is any component in a life support device or system whose failure to perform can be reasonably expected to cause the failure of the life support device or system or to affect its safety or effectiveness. Per Vicor Terms and Conditions of Sale, the user of Vicor products and components in life support applications assumes all risks of such use and indemnifies Vicor against all liability and damages.

Intellectual Property Notice

Vicor and its subsidiaries own Intellectual Property (including issued U.S. and Foreign Patents and pending patent applications) relating to the products described in this data sheet. No license, whether express, implied, or arising by estoppel or otherwise, to any intellectual property rights is granted by this document. Interested parties should contact Vicor's Intellectual Property Department.

The products described on this data sheet are protected by the following U.S. Patents Numbers:
5,945,130; 6,403,009; 6,710,257; 6,788,033; 6,940,013; 6,969,909; 7,038,917; 7,154,250; 7,166,898; 7,187,263; 7,202,646; 7,361,844; 7,368,957; RE40,072; D496,906; D506,438; D509,472; and for use under 6,975,098 and 6,984,965.

Vicor Corporation
25 Frontage Road
Andover, MA, USA 01810
Tel: 800-735-6200
Fax: 978-475-6715

email
Customer Service: custserv@vicorpower.com
Technical Support: apps@vicorpower.com