OptoSupply
Light It Up

3mm Tower Blue LED
OSB5SA3Q51A-1mA

■Features

- High Luminous LEDs
- 3mm Tower Standard Directivity
- Superior Weather-resistance
- UV Resistant Epoxy
- Low Power dissipation: Type. 2.8mW
- Water Clear Type

■Applications

- Electronic Signs And Signals
- Small Area Illuminations
- Back Lighting
- Other Lighting

■Outline Dimension

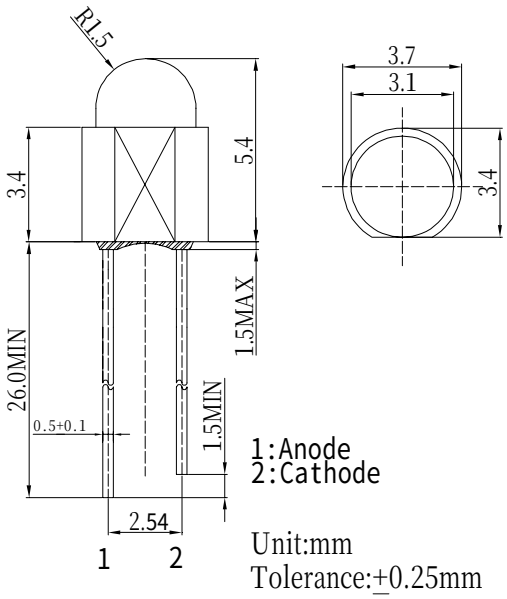

■Absolute Maximum Rating (Ta=25℃)

Item	Symbol	Value	Unit
DC Forward Current	I_F	30	mA
Pulse Forward Current*	I_{FP}	100	mA
Reverse Voltage	V_R	5	V
Power Dissipation	P_D	108	mW
Operating Temperature	Topr	-30 ~ +85	℃
Storage Temperature	Tstg	-40~ +100	℃
Lead Soldering Temperature	Tsol	260℃/5sec	-

*Pulse width Max.10ms Duty ratio max 1/10

■Directivity

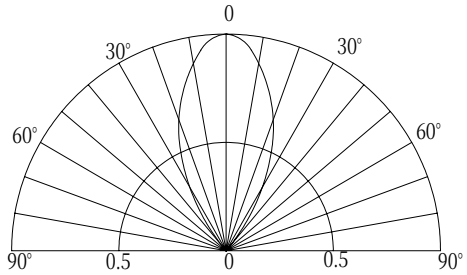

■Electrical -Optical Characteristics (Ta=25℃)

Item	Symbol	Condition	Min.	Typ.	Max.	Unit
DC Forward Voltage	V_F	I_F=1mA	2.6	2.8	3.3	V
DC Reverse Current	I_R	V_R=5V	-	-	10	μA
Domi. Wavelength*	λ_D	I_F=1mA	465	470	475	nm
Luminous Intensity*	Iv	I_F=1mA	220	330	-	mcd
50% Power Angle	$2\theta_{1/2}$	I_F=1mA	-	50	-	deg

*1 Tolerance of dominant wavelength is ±1nm
*2 Tolerance of luminous intensity is ±15%