INTEGER-N PLL WITH INTEGRATED VCO

FEATURES

- **Fully Integrated VCO**
- **Low Phase Noise: –137dBc/Hz at 600kHz, f_{VCO} of 1.9GHz**
- **Low Noise Floor: –158dBc/Hz at 10MHz Offset**
- **Integer-N PLL**
- **Input Reference Frequency range: 10MHz to 104MHz**
- **VCO Frequency Divided by 2-4 Output**
- **Output Buffer Enable Pin**
- **Programmable Charge Pump Current**
- **Hardware and Software Power Down**
- **3-Wire Serial Interface**
- **Single Supply: 4.5V to 5.25V Operation**

APPLICATIONS

- **Wireless Infrastructure**
  - **WCDMA, CDMA, GSM**
  - **Wideband Transceivers**
  - **Wireless Local Loop**
  - **RFID Transceivers**
  - **Clock generation**
  - **IF LO generation**

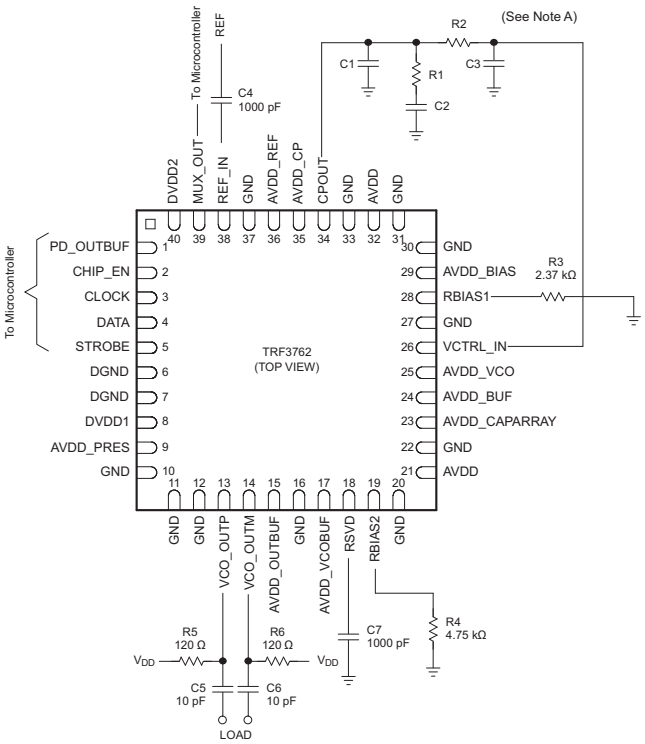

A. See the Application Information section for Loop Filter Design procedures.

AVAILABLE DEVICE OPTIONS

PART NUMBER	Div by 1		Div by 2		Div by 4	
	Fstart	Fstop	Fstart	Fstop	Fstart	Fstop
TRF3762-E	1805	1936	902.5	968	451.25	484

DESCRIPTION

TRF3762-E is a high performance, highly integrated frequency synthesizer, optimized for high performance applications. The device includes a low-noise, voltage-controlled oscillator (VCO) and an integer-N PLL. TRF3762-E integrates divide-by 1, 2, or 4 options for a more flexible output frequency range. The device is controlled through a 3-wire serial-programming-interface (SPI) interface. For power sensitive applications, the device can be powered down by the SPI interface or externally via CHIP_EN (pin 2).

The TRF3762-E offers the ability to reduce lock time when compared to the TRF3761-E device. The TRF3762-E was designed so that the external loop filter is the determining factor in the setting of lock time. Typical lock times for the TRF3762-E are less than 350µs (depending on the loop filter circuit). All other features of the TRF3762-E are identical to the TRF3761-E including superior phase noise and spurious output as well as the programming model and register mapping. The TRF3762-E is pin-to-pin compatible to the TRF3761-E.

Please be aware that an important notice concerning availability, standard warranty, and use in critical applications of Texas Instruments semiconductor products and disclaimers thereto appears at the end of this data sheet.

PRODUCTION DATA information is current as of publication date. Products conform to specifications per the terms of the Texas Instruments standard warranty. Production processing does not necessarily include testing of all parameters.

Copyright © 2008, Texas Instruments Incorporated

This integrated circuit can be damaged by ESD. Texas Instruments recommends that all integrated circuits be handled with appropriate precautions. Failure to observe proper handling and installation procedures can cause damage.

ESD damage can range from subtle performance degradation to complete device failure. Precision integrated circuits may be more susceptible to damage because very small parametric changes could cause the device not to meet its published specifications.

PACKAGE/ORDERING INFORMATION(1)

PRODUCT	PACKAGE LEAD	PACKAGE DESIGNATOR(2)	SPECIFIED TEMPERATURE RANGE	PACKAGE MARKINGS	ORDERING NUMBER	TRANSPORT MEDIA, QUANTITY
TRF3762-E	QFN-40	RHA	–40°C to 85°C	TRF3762-E	TRF3762-EIRHAR	Tape and Reel, 2500
					TRF3762-EIRHAT	Tape and Reel, 250

(1) For the most current package and ordering information, see the Package Option Addendum at the end of this document, or see the TI website at www.ti.com.
(2) Thermal pad size: 177 × 177 mils.

Functional Block Diagram

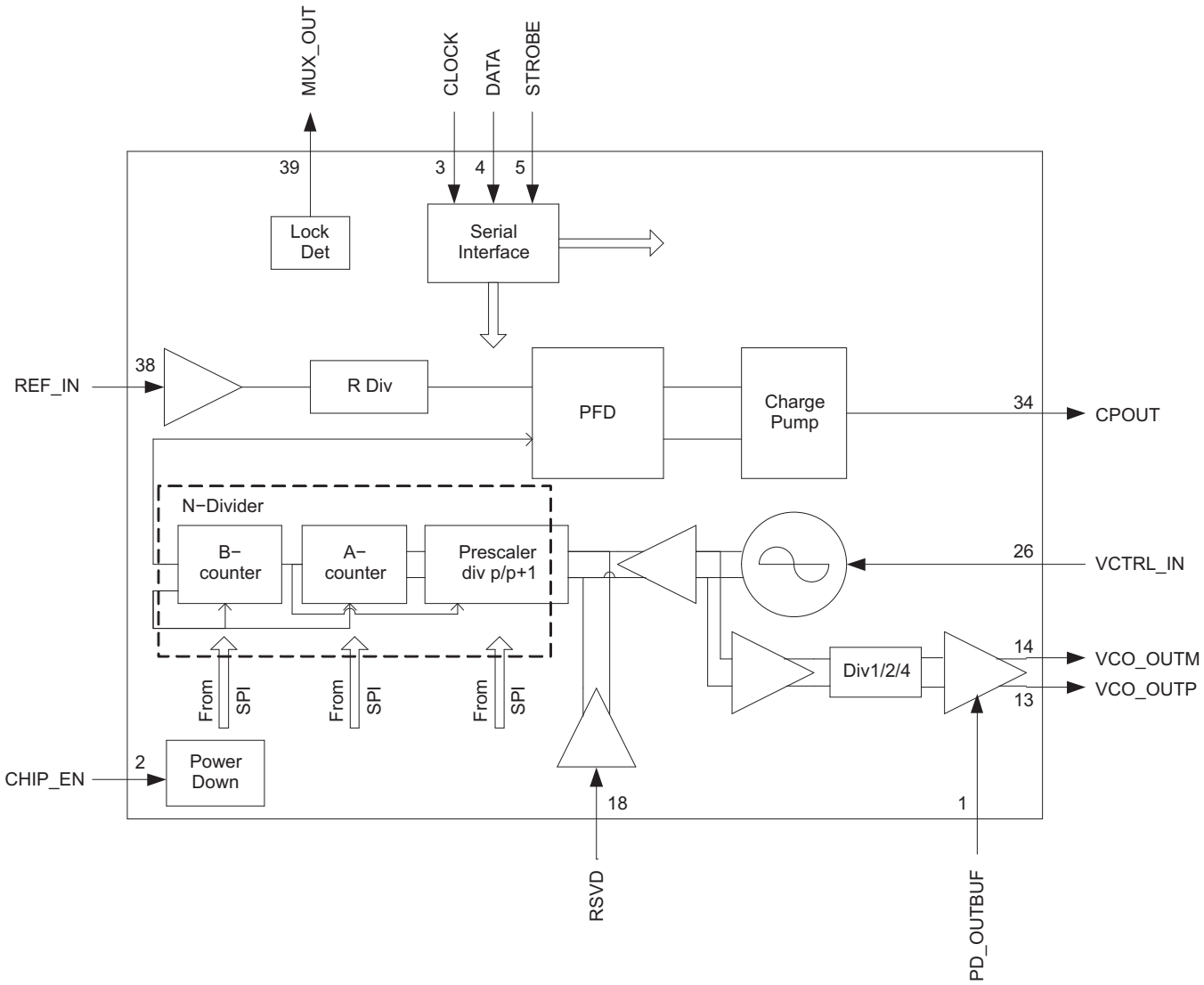

Copyright © 2008, Texas Instruments Incorporated

RHA PACKAGE
(TOP VIEW)

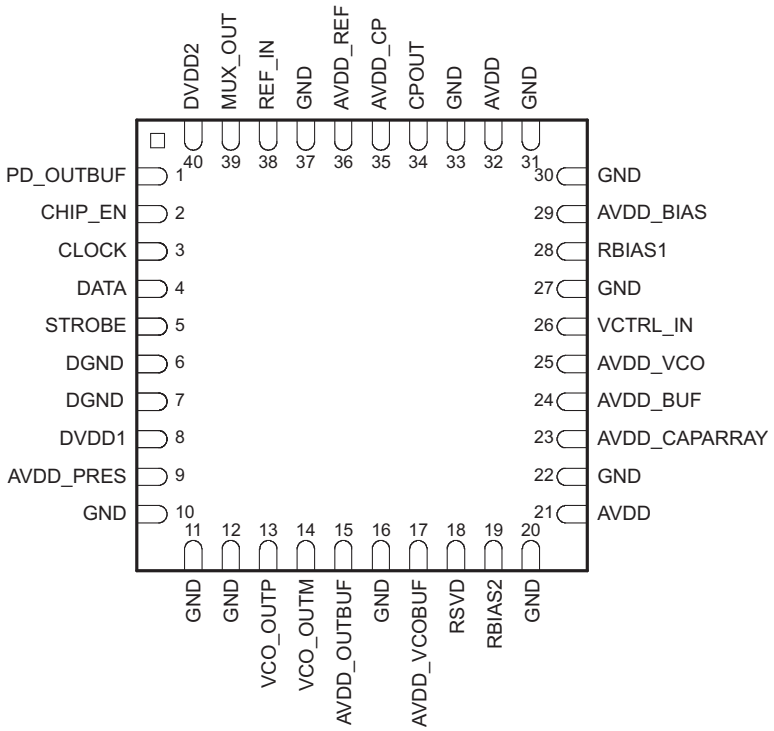

TERMINAL FUNCTIONS

TERMINAL (1)		I/O	DESCRIPTION
NAME	NO.		
PD_OUTBUF	1	I	Once configured in register 1, this pin will control the output buffer. Logic level 0 turns on the buffer and logic level 1 turns off the buffer.
CHIP_EN	2	I	This pin requires 4.5 to 5.25V applied for normal operation. Grounding this pin will disable the chip.
CLOCK	3	I	Serial-programming-interface clock
DATA	4	I/O	Serial-programming-interface data, used for programming the frequency and other features.
STROBE	5	I	Serial-programming-interface strobe required to write the data to the chip
DGND	6, 7		Digital ground
DVDD1	8		Digital power supply, requires 4.5 to 5.25V, Suggested decoupling, 0.1µF and 10pF capacitors in parallel.
AVDD_PRES	9		Power supply for prescaler circuit, requires 4.5 to 5.25V, Suggested decoupling, 0.1µF and 10pF capacitors in parallel.
VCO_OUTP	13	O	VCO output, can be used single ended matched to 50Ω or in conjuction with VCO_OUTM (pin 14) with a balun.
VCO_OUTM	14	O	VCO output, can be used single ended matched to 50Ω or in conjunction with VCO_OUTP (pin 13) with a balun.
AVDD_OUTBUF	15		Power supply for output buffers, requires 4.5 to 5.25V, Suggested decoupling, 0.1µF and 10pF capacitors in parallel.
AVDD_VCOBUF	17		Power supply for VCO buffers, requires 4.5 to 5.25V, Suggested decoupling, 0.1µF and 10pF capacitors in parallel.
RSVD	18	I	Reserved for internal use, requires a 1000pF capacitor to ground for opperation.
RBIAS2	19	I/O	External bias resistor for setting the internal reference current requires a 4.75KΩ resister to ground.

(1) Power Supply = V_{CC} = DVDD1, AVDD1, AVDD_PRES, AVDD_VCOBUF, AVDD, AVDD_CAPARRAY, AVDD_BUF, AVDD_VCO, AVDD_BIAS, AVDD_CP, AVDD_REF, DVDD2

Copyright © 2008, Texas Instruments Incorporated

TERMINAL FUNCTIONS (continued)

TERMINAL[1]		I/O	DESCRIPTION
NAME	NO.		
AVDD	21		Analog power supply, requires 4.5 to 5.25 V, Suggested decoupling, 0.1µF and 10pF capacitors in parallel.
AVDD_CAPARRAY	23		Power supply for VCO core and buffer, requires 4.5 to 5.25V, Suggested decoupling, 0.1µF and 10pF capacitors in parallel.
AVDD_BUF	24		Power supply for VCO core and buffer, requires 4.5 to 5.25V, Suggested decoupling, 0.1µF and 10pF capacitors in parallel.
AVDD_VCO	25		Power supply for VCO core and buffer, requires 4.5 to 5.25V, Suggested decoupling, 0.1µF and 10pF capacitors in parallel.
VCTRL_IN	26	I	VCO control voltage, the output of the loop filter is applied to this pin.
RBIAS1	28	I/O	External bias resistor for setting charge pump reference current, requires 2.37KΩ resistor to ground.
AVDD_BIAS	29		Power supply for band gap current bias, requires 4.5 to 5.25V, Suggested decoupling, 0.1µF and 10pF capacitors in parallel.
GND	10, 11, 12, 16, 20, 22, 27, 30, 31, 33, 37		Analog ground
AVDD	32		Power supply for FUSE cell, requires 4.5 to 5.25V. Suggested decoupling, 0.1µF, 1nF and 1pF capacitors in parallel.
CPOUT	34	O	Charge pump output, connected to the input of loop filter.
AVDD_CP	35		Analog power supply for charge pump, requires 4.5 to 5.25V, Suggested decoupling, 0.1µF and 10pF capacitors in parallel
AVDD_REF	36		Power supply for REF_IN circuitry, requires 4.5 to 5.25V, Suggested decoupling, 0.1µF and 10pF capacitors in parallel.
REF_IN	38	I	Reference signal input, reference oscillator input of 10MHz to 104MHz.
MUX_OUT	39	O	Generally used for digital lock detect, can be used to verify locked condition by microcontroller, high = locked, low = unlocked.
DVDD2	40		Power supply for the digital regulator, requires 4.5 to 5.25V, Suggested decoupling, 0.1µF and 10pF capacitors in parallel.

THERMAL CHARACTERISTICS

over operating free-air temperature range (unless otherwise noted)

PARAMETER[1]		TEST CONDITIONS	MIN	TYP	MAX	UNIT
θ_{JA}	Thermal derating, junction-to-ambient	Soldered slug, no airflow		26		°C/W
		Soldered slug, 200-LFM airflow		20.1		°C/W
		Soldered slug, 400-LFM airflow		17.4		°C/W

(1) Determined using JEDEC standard JESD-51 with High K board.

ABSOLUTE MAXIMUM RATINGS

Over operating free-air temperature range (unless otherwise noted)[1]

		VALUE	UNIT
	Supply voltage range[2]	–0.3 to 5.5	V
	Digital I/O voltage range	–0.3 to V_{CC} +0.3	V
T_J	Operating virtual junction temperature range	–40 to 150	°C
T_{stg}	Storage temperature range	–65 to 150	°C

(1) Stresses beyond those listed under absolute maximum ratings may cause permanent damage to the device. These are stress ratings only, and functional operation of the device at these or any other conditions beyond those indicated under recommended operating conditions is not implied. Exposure to absolute maximum rated conditions for extended periods may affect device reliability.
(2) All voltage values are with respect to network ground terminal.

Copyright © 2008, Texas Instruments Incorporated

RECOMMENDED OPERATING CONDITIONS

Over operating free-air temperature range (unless otherwise noted)

		MIN	NOM	MAX	UNIT
V_{CC}	Power supply voltage	4.5	5	5.25	V
	Power supply voltage ripple			500	μV_{pp}
T_A	Operating free air temperature range	–40		85	°C
T_J	Operating virtual junction temperature range	–40		150	°C

ELECTRICAL CHARACTERISTICS

Supply voltage = V_{CC} = 4.5V to 5.25V, T_A = –40 to 85 °C (unless otherwise noted)

PARAMETER		TEST CONDITIONS		MIN	TYP	MAX	UNIT
DC Parameters							
I_{CC}	Total supply current	T_A = 25°C	Divide by 1 output		130		mA
			Divide by 2 output		140		mA
			Divide by 4 output		150		mA
Reference Oscillator Parameters							
f_{ref}	Reference frequency			10		104	MHz
	Reference input sensitivity (REF_IN)			0.5		2	V_{PP}
	Reference input impedance (REF_IN)	Parallel capacitance			2		pF
		Parallel resistance			3000		Ω
PFD Charge Pump							
	PFD frequency					30	MHz
	Charge pump current (I_{CP_OUT})	SPI programmable			5.6		mA
Digital Interface (PD_OUTBUF, CHIP_EN, CLOCK, DATA, STROBE)							
V_{IH}	High-level input voltage			2.5		V_{CC}	V
V_{IL}	Low-level input voltage			0		0.8	V
V_{OH}	High-level output voltage			$0.8V_{CC}$			V
V_{OL}	Low-level output voltage					$0.2V_{CC}$	V
Output Power							
	Single ended				0		dBm
	Differential				3		dBm

TIMING REQUIREMENTS

Supply voltage = V_{CC} = 4.5V to 5.25V, T_A = –40 to 85 °C

PARAMETER		TEST CONDITIONS	MIN	TYP	MAX	UNIT
$t_{(CLK)}$	Clock period		50			ns
t_{su1}	Setup time, data		10			ns
t_h	Hold time, data		10			ns
t_w	Pulse width, STROBE		20			ns
t_{su2}	Setup time, STROBE		10			ns

Copyright © 2008, Texas Instruments Incorporated

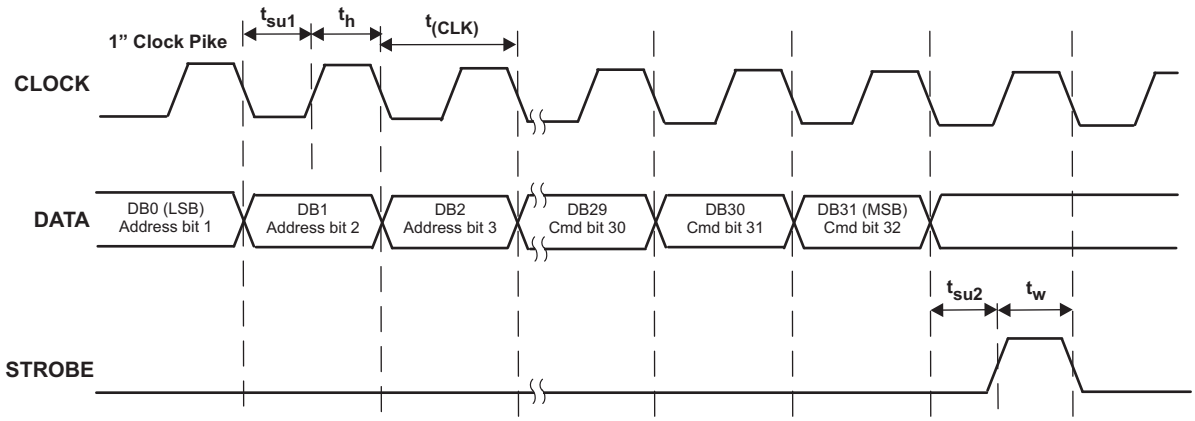

A. The first 4 bits, DB(3-0), of data are Address bits. The 28 remaining bits, DB(31-4), are part of the command. The command is little endian or lower bits first.

Figure 1. Serial Programming Timing Diagram

Copyright © 2008, Texas Instruments Incorporated

TRF3762-E ELECTRICAL CHARACTERISTICS

Supply voltage = V_{CC} = 5V, T_A = –40 to 85 °C (unless otherwise noted)

PARAMETER	TEST CONDITIONS		MIN	TYP	MAX	UNIT
NOISE CHARACTERISTICS						
VCO phase noise, Free running VCO direct output	f_{VCO} = 1869MHz, f_O = 1869MHz	100kHz offset		-119.3		dBc/Hz
		600kHz offset		-137.3		
		1MHz offset		-141.4		
		6MHz offset		-154.1		
		10MHz offset		-156		
VCO phase noise, Free running VCO divide-by-2 output	f_{VCO} = 1869MHz, f_O = 934.5MHz	100kHz offset		-124.4		dBc/Hz
		600kHz offset		-143		
		1MHz offset		-146.7		
		6MHz offset		-156.5		
		10MHz offset		-156.7		
VCO phase noise, Free running VCO divide-by-4 output	f_{VCO} = 1869MHz, f_O = 467.25MHz	100kHz offset		-131		dBc/Hz
		600kHz offset		-149		
		1MHz offset		-151		
		6MHz offset		-155.8		
		10MHz offset		-156.1		
VCO phase noise, Closed loop phase noise direct output(1)(2)(3)	f_{VCO} = 1869MHz, f_O = 1869MHz	1kHz offset		-82.5		dBc/Hz
		600kHz offset		-136.7		
		1MHz offset		-141.6		
		10MHz offset		-156		
RMS phase error Closed loop phase noise direct output(3)	100Hz to 10MHz			1.02°		
VCO phase noise, Closed loop phase noise divide-by-2 output(1)(2)(3)	f_{VCO} = 1869MHz, f_O = 934.5MHz	1kHz offset		-87.8		dBc/Hz
		600kHz offset		-142.6		
		1MHz offset		-147		
		10MHz offset		-1567.6		
RMS phase error Closed loop phase noise divide-by-2 output(3)	100Hz to 10MHz			0.521°		
VCO phase noise, Closed loop phase noise divide-by-4 output(1)(2)(3)	f_{VCO} = 1869MHz, f_O = 467.25MHz	1kHz offset		-92.9		dBc/Hz
		600kHz offset		-148.1		
		1MHz offset		-151.4		
		10MHz offset		-155.2		
RMS phase error Closed loop phase noise divide-by-4 output(3)	100Hz to 10MHz			0.251°		
VCO gain, Kv	VCO free running			24		MHz/V
Reference spur and multiples (2)				-80		dBc

(1) See Application Circuit Figure 15.
(2) PFD = 200kHz, Loop Filter BW = 15kHz, Output frequency step = 200kHz.
(3) Reference oscillator RMS phase error = 0.008250°, RMS jitter = 881.764 fs.

Copyright © 2008, Texas Instruments Incorporated

TRF3762-E TYPICAL CHARACTERISTICS

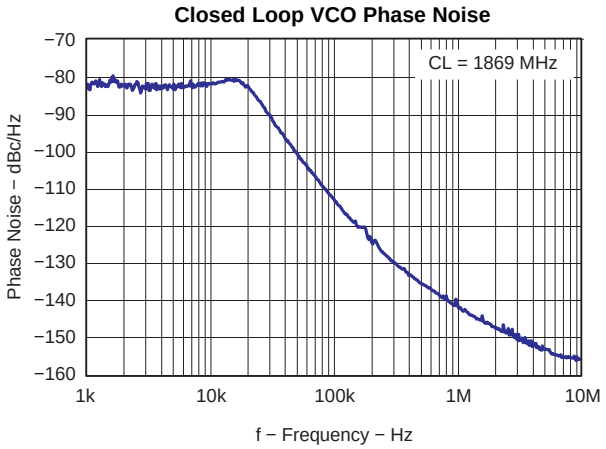

Figure 2.

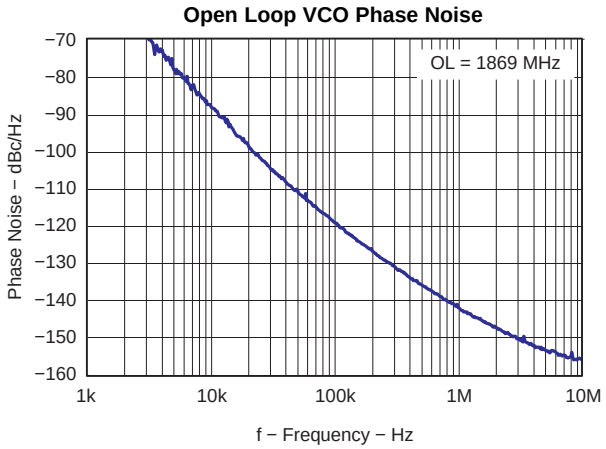

Figure 3.

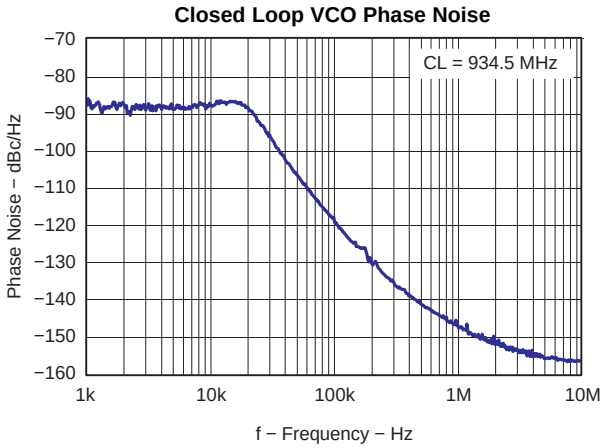

Figure 4.

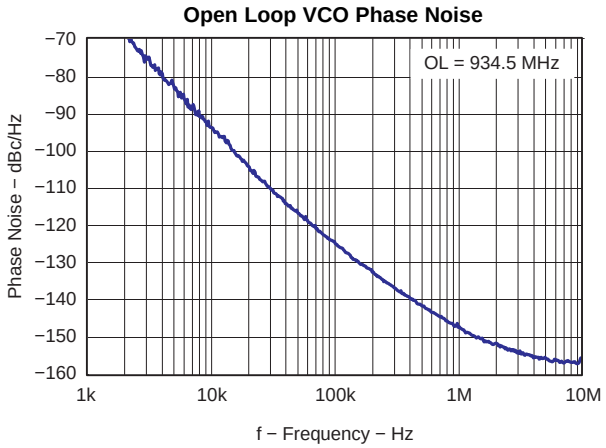

Figure 5.

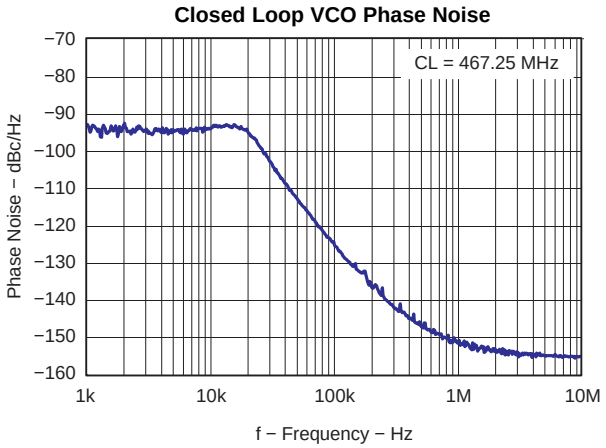

Figure 6.

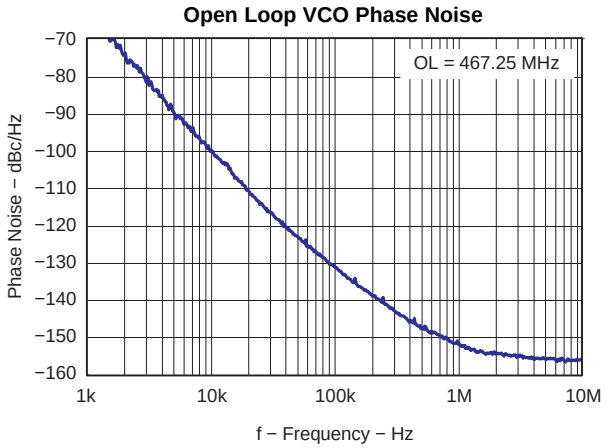

Figure 7.

Copyright © 2008, Texas Instruments Incorporated

TRF3762-E TYPICAL CHARACTERISTICS (continued)

Direct Output: PFD Frequency Spurs

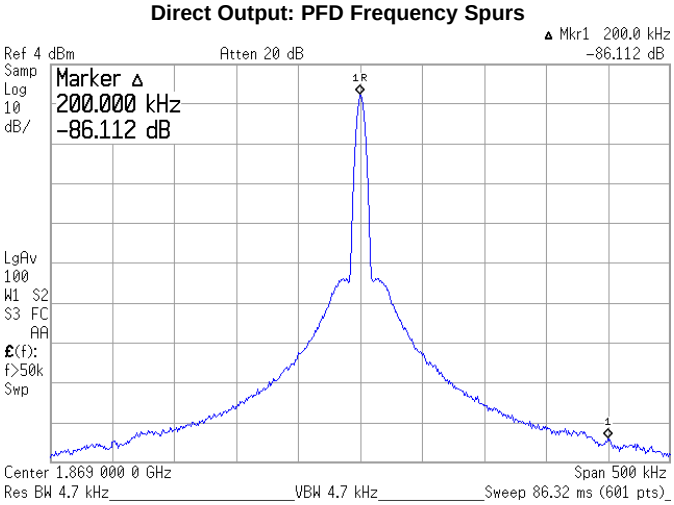

Figure 8.

Direct-By-2 Output: PFD Frequency Spurs

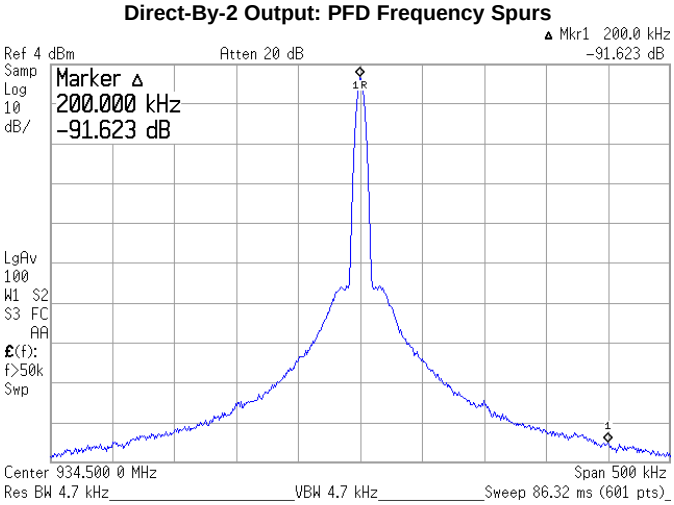

Figure 9.

Direct-By-4 Output: PFD Frequency Spurs

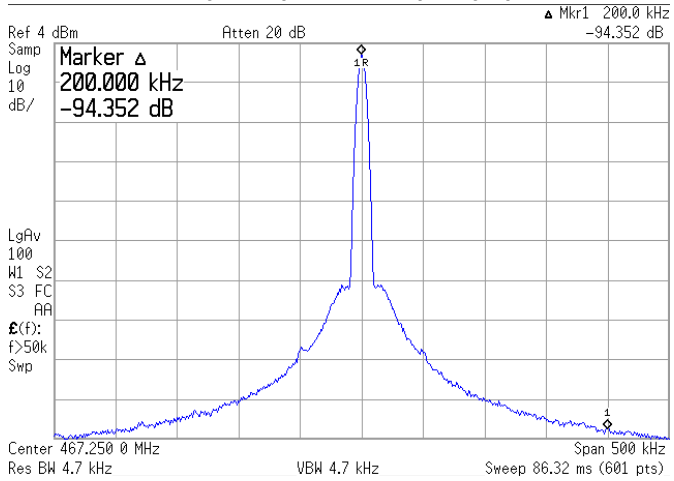

Figure 10.

SERIAL INTERFACE PROGRAMMING REGISTERS DEFINITION

The TRF3762 features a 3-wire serial programming interface that controls an internal, 32-bit shift register. There are a total of 3 signals that need to be applied: the CLOCK (pin 3), the serial DATA (pin 4) and the STROBE (pin 5). The DATA (DB0-DB31) is loaded LSB first and is read on the rising edge of the CLOCK. The STROBE is asynchronous to the CLOCK and at its rising edge the data in the shift register gets loaded onto the selected internal register. The first four bits (DB0-DB3) is the address to select the available internal registers.

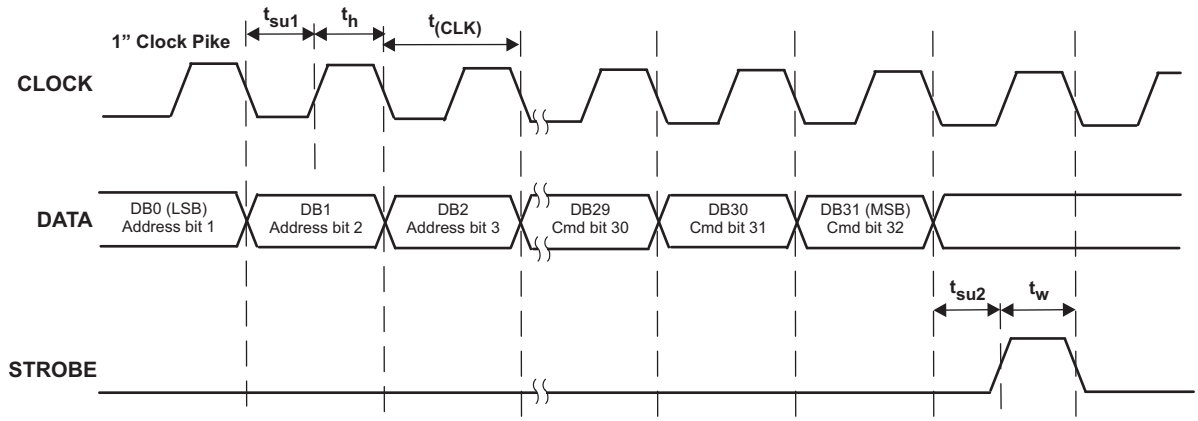

A. The first 4 bits, DB(3-0), of data are Address bits. The 28 remaining bits, DB(31-4), are part of the command. The command is little endian or lower bits first.

Figure 11. Serial Programming Timing Diagram

Register Address				REST	Charge Pump Current Select			Output Mode		OUTBUF EN_SEL	PD BUFOUT	Reference Clock Divider (RDiv)			
DB0	DB1	DB2	DB3	DB4	DB5	DB6	DB7	DB8	DB9	DB10	DB11	DB12	DB13	DB14	DB15

Reference Clock Divider (RDiv)										Anti Backlash		PFD_POL	TRIS_CP	CP_TEST	Full Cal Req
DB16	DB17	DB18	DB19	DB20	DB21	DB22	DB23	DB24	DB25	DB26	DB27	DB28	DB29	DB30	DB31

Figure 12. Register 1

Copyright © 2008, Texas Instruments Incorporated

Table 1. Register 1: Device Setup

REGISTER 1 MAPPING				
Data Field	**DB31**	FULL_CAL_REQ	This is a read only bit, that indicates if a power-up cal is required	0 power-up cal is not required 1 power-up cal is required
	DB30	CP_TEST	TI internal use only	1 test enabled
	DB29	TRIS_CP	High-impedance state charge pump output	1 CP high-impedance state 0 for normal operation
	DB28	PFD_POL	Selects Polarity of PFD, should match polarity of VCO gain. If using external VCO with Negative gain then set to 0 and vise versa. The internal VCO has positive gain so set to positive(1)	0 negative 1 positive
	DB27	ABPW1	ABPW<1,0>: anti-backlash pulse width	00 1.5ns delay 01 0.9ns delay 10 3.8ns delay 11 2.7ns delay
	DB26	ABPW0		
	DB25	RDIV_13	14-bit reference clock divider	RDIV<13,0>:00...01: divide by 1 RDIV<13,0>:00...10: divide by 2 RDIV<13,0>:00...11: divide by 3
	DB24	RDIV_12		
	DB23	RDIV_11		
	DB22	RDIV_10		
	DB21	RDIV_9		
	DB20	RDIV_8		
	DB19	RDIV_7		
	DB18	RDIV_6		
	DB17	RDIV_5		
	DB16	RDIV_4		
	DB15	RDIV_3		
	DB14	RDIV_2		
	DB13	RDIV_1		
	DB12	RDIV_0		
	DB11	PD_BUFOUT	If DB10 = 0 then it controls power down of output buffer	<DB10:11>: 00 default; output buffer on 01 output buffer off 1x output buffer on/off controlled by OUTBUF_EN pin
	DB10	OUTBUF_EN_SEL	Select Output Buffer enable control:	0 internal 1 through OUTBUF_EN pin
	DB9	OUT_MODE_1	OUTBUFMODE<1,0>: Selection of RF output buffer division ratio	00 divide by 1 01 divide by 2 10 divide by 4
	DB8	OUT_MODE_0		
	DB7	ICP2	ICP<2,0>: select charge pump current (1 mA step). From 1.4mA to 11.2mA with Rbias set to 2.37KΩ.	
	DB6	ICP1		
	DB5	ICP0		
	DB4	RESET	Registers reset	1 high 0 low for normal operation
Address Bits	**DB3**		Address Bits <3,0>=0000 for register 1	
	DB2			
	DB1			
	DB0			

OUT_MODE<1,0>: TRF3762 has an optional divide by 2 or 4 output, which is selectable by programming bits <OUT_MODE_1, OUT_MODE_0> of register 1 (see Table 1).

CP_TEST: By setting bit DB30 to 1 it is possible to test the PFD up or down pulses. Internal TI use only.

TRIS_CP: If bit DB29 is set to 1, the charge pump output goes in tri-state. For normal operation, DB29 must be set to 0.

ABPW: Bits <DB27, DB26> are used to program the width of the anti-backlash pulses of the PFD. The user selects one of the following values: 0.9ns, 1.5ns, 2.7ns and 3.8ns. Backlash can occur when Fpfd becomes phase aligned with Fout of the VCO. This will cause a high impedance state on the phase detector and allow the output frequency to drift until the phase difference is enough to cause the phase detector to start sending signals to the charge pump to correct the difference. This slight variation will show up as a sub harmonic of the pfd signal in the passband of the loop filter which would result in a significant spur in the output of the VCO. It is recommended that the anti-backlash pulse be set to the 1.5ns which gives the best spur reduction for the TRF3762.

PFD_POL: Bit DB28 of register 1 sets the polarity of the PFD. A Low (0) selects a negative polarity, and a High (1) selects a positive polarity. By choosing the correct polarity, the TRF3762 will works with an external VCO having both positive and negative gain (Kv). For example if an external VCO has a Kv = -23MHz/V then the PFD polarity would need to be negative, so DB28 would be set to a Low (0). When using the internal VCO with a Kv of 23MHz/V, the PDF_POL should be set to 1.

RDiv: A 14-bit word programs the RDiv for the reference signal, DB25 is the MSB and DB12 is the LSB. RDiv value is determined by dividing the reference frequency by the channel step size. For example if the reference frequency is 10MHz and the channel step size is 200KHz then RDiv would be 50. This sets up the Fpfd for the phase detector, in other words the reference frequency will be divided down by a factor of RDiv which in this example is 50.

ICP: Bits <DB7, DB5> set the charge pump current.

$$I_{CP} = \frac{1.2\ V}{R_{bias1}} \times (N + 1) \times \frac{22.168}{8} \tag{1}$$

which reduces to:

$$I_{CP} = \frac{3.3252 \times (N + 1)}{R_{bias1}} \tag{2}$$

where N = decimal value of [Reg1 DB<7:5>]. The range is set by N and Rbias2. It is recommended that Icp be set to 7mA or <DB7, DB5>=101.

OUTBUF_EN_SEL: Output buffer on/off state is controlled through serial interface or an external pin. If bit DB10 is a 0 (default state) the output buffers state is elected through bit DB11. If DB10 is a 1, the buffers on/off are directly controlled by the OUTBU_EN pin.

RESET: Setting bit DB4 to 1, all registers are reset to default values.

Refer to **Register 1** under the *Application Information* section.

Register Address				Reference Frequency (Integer Part)							Reference Frequency (Fractional Part)				
DB0	DB1	DB2	DB3	DB4	DB5	DB6	DB7	DB8	DB9	DB10	DB11	DB12	DB13	DB14	DB15

Reference Frequency Continued		VCO Frequency in MHz													START _CAL
DB16	DB17	DB18	DB19	DB20	DB21	DB22	DB23	DB24	DB25	DB26	DB27	DB28	DB29	DB30	DB31

Figure 13. Register 2

Copyright © 2008, Texas Instruments Incorporated

Table 2. Register 2: VCO Calibration

REGISTER 2 MAPPING				
Data Field	**DB31**	START_CAL		1 start calibration
	DB30	FOUT12	VCO frequency in MHz start calibration	
	DB29	FOUT11		
	DB28	FOUT10		
	DB27	FOUT9		
	DB26	FOUT8		
	DB25	FOUT7		
	DB24	FOUT6		
	DB23	FOUT5		
	DB22	FOUT4		
	DB21	FOUT3		
	DB20	FOUT2		
	DB19	FOUT1		
	DB18	FOUT0		
	DB17	REF_FRAC6	Reference frequency in MHz (fractional part)	0000000 = 0.00MHz 0000001 = 0.01MHz 0000010 = 0.02MHz . . . . . 1100011 = 0.99MHz
	DB16	REF_FRAC5		
	DB15	REF_FRAC4		
	DB14	REF_FRAC3		
	DB13	REF_FRAC2		
	DB12	REF_FRAC1		
	DB11	REF_FRAC0		
	DB10	REF6	Reference frequency in MHz (integer part)	0001010 = 10MHz 0001011 = 11MHz . . . . . 1101000 = 104MHz
	DB9	REF5		
	DB8	REF4		
	DB7	REF3		
	DB6	REF2		
	DB5	REF1		
	DB4	REF0		
Address Bits	**DB3**	0	Address Bits <3,0>=0001 for register 2	
	DB2	0		
	DB1	0		
	DB0	1		

Reference Frequency: The 14 bits <DB17, DB4> are used to specify the input reference frequency as multiples of 10kHz. Bits <DB10,DB4> specify the integer part of the reference frequency expressed in MHz. Bits <DB17,DB11> set the fraction part. Those values are then used during the calibration of the internal VCO. For example if using a 20MHz reference oscillator then bits<DB10,DB4> would be 0010100 and bits<DB17,DB11> would be 0000000. If the reference oscillator is 13.1MHz then bits<DB10,DB4> would be 0001101 and bits<DB17,DB11> would be 0001010.

Start Calibration: A 1 in DB31 starts the internal VCO calibration. When the calibration is complete, DB31 bit is internally reset to 0.

FOUT<12,0>: This 13-bit word <DB30,DB18> specifies the VCO output frequency in MHz. If output frequency is not a integer multiple of MHz, this value must be approximated to the closest integer in MHz.

Refer to **Register 2** under the *Application Information* section.

Register Address				Dual-Modulus Prescalar Mode		A-Counter						B-Counter			
DB0	DB1	DB2	DB3	DB4	DB5	DB6	DB7	DB8	DB9	DB10	DB11	DB12	DB13	DB14	DB15

B-Counter									Test MUX				Lock PLL	RSRV	RSRV
DB16	DB17	DB18	DB19	DB20	DB21	DB22	DB23	DB24	DB25	DB26	DB27	DB28	DB29	DB30	DB31

Figure 14. Register 3

Table 3. Register 3: A and B Counters

REGISTER 3 MAPPING				
Data Field	**DB31**	Rsrv	Reserved	
	DB30	Rsrv	Reserved	
	DB29	START_LK	Lock PLL to frequency	1 active
	DB28	TEST_MUX_3	See Table 4 for descriptions and settings.	0001 = LOCK_DETECT enabled
	DB27	TEST_MUX_2		
	DB26	TEST_MUX_1		
	DB25	TEST_MUX_0		
	DB24	B_12	13-bit B counter	
	DB23	B_11		
	DB22	B_10		
	DB21	B_9		
	DB20	B_8		
	DB19	B_7		
	DB18	B_6		
	DB17	B_5		
	DB16	B_4		
	DB15	B_3		
	DB14	B_2		
	DB13	B_1		
	DB12	B_0		
	DB11	A_5	6-bit A counter	
	DB10	A_4		
	DB9	A_3		
	DB8	A_2		
	DB7	A_1		
	DB6	A_0		
	DB5	PRESC_MOD1	Dual-modulus prescaler mode	<B5,B4>:00 for 8/9 <B5,B4>:01 for 16/17 <B5,B4>:10 for 32/33 <B5,B4>:11 for 64/65
	DB4	PRESC_MOD0		
Address Bits	**DB3**	0	Address Bits	<3,0>=0010 for register 3
	DB2	0		
	DB1	1		
	DB0	0		

Copyright © 2008, Texas Instruments Incorporated

B<12,0>: This 13-bit word <DB24,DB12> controls the value of the B counter of the N divider. The valid range is from 3 to 8191.

A<5,0>: These 6 bits <DB11,DB6> control the value of the A counter. The valid range is from 0 to 63.

PRESC_MOD<1,0>: These bits <DB5,DB4> define the mode of the dual-modulus prescaler according to Table 3.

START_LK: TRF3762 does not load the serial interface registers values into the dividers registers until bit DB29 of register 3 is set to 1. After TRF3762 is locked to the new frequency, bit DB29 is internally reset to 0.

Refer to **Register 3** under the *Application Information* section.

FUNCTIONAL DESCRIPTION

VCO

The TRF3762 integrates a high-performance, LC tank, voltage-controlled oscillator (VCO). For each of the devices of the TRF3762 family, the inductance and capacitance of the tank are optimized to yield the best phase-noise performance. The VCO output is fed externally and to the prescaler through a series of very low noise buffers, that greatly reduce the effect of load pulling onto the VCO.

Divide by 2, by 4, and Output Buffer

To extend the frequency coverage, the TRF3762 integrates a divide by 2 and by 4 with very low noise floor. The VCO signal is fed externally through a final open-collector differential-output buffer. This buffer is able to provide up to 3dBm (typical) of power into a 200Ω differential resistive load. The open-collector structure gives the flexibility to choose different load configurations to meet different requirements.

N-Divider

Prescaler Stage

This stage divides down the VCO frequency before the A and B counters. This is a dual-modulus prescaler and the user can select any of the following settings: 8/9, 16/17, 32/33, and 64/65. Prescaling is used due to the fact that the internal devices are limited in frequency operations of 200MHz. To determine the proper prescaler value, Fout which is the frequency out of the VCO is divided by the numerator of the prescaler if the answer is less than 200MHz then that is the prescalar to use, see Equation 3. If the value is higher than 200MHz then repeat this procedure with the next prescalar numerator until a value of 200MHz or less is achieved. Refer to Synthesizing a Selected Frequency in the Section 7 Register 3.

$$\frac{F_{OUT}}{Prescalar_{num}} \leq 200MHz \tag{3}$$

A and B Counter Stage

The TRF3762 includes a 6-bit A counter and a 13-bit B counter that operate on the output of the prescaler. The A counter can take values from 0 to 63, while the B counter can take values from 3 to 8191. Also, the value for the B counter must be greater than or equal to the value for the A counter. The A and B counter with the prescaler stage create the VCO N-divider, see Equation 4 and Equation 5. Refer to Synthesizing a Selected Frequency in the Section 7 Register 3.

Copyright © 2008, Texas Instruments Incorporated

$$N = \frac{F_{OUT}}{F_{PFD}} = \left(A_{COUNTER} + Prescalar_{num} \times B_{COUNTER}\right) \tag{4}$$

$$\frac{N}{Prescalar_{num}} = x_{integer} \times y_{decimal}, \Rightarrow$$

$$B_{COUNTER} = x_{integer} \text{ and } A_{COUNTER} = Prescalar_{num} \times y_{decimal} \tag{5}$$

Reference Divider

TRF3762 includes a 14-bit RDiv, also known as RDiv, that allows the input reference frequency to be divided down to produce the reference clock to the phase frequency detector (PFD) this clock is also known as F_{PFD} which is also the channel step size. Division ratios from 1 to 16,383 are allowed. To determine R_{DIV} use Equation 6.

$$R_{DIV} = \frac{F_{REF_IN}}{F_{PFD}} \tag{6}$$

The output frequency (F_{OUT}) is determined using Equation 7.

$$F_{OUT} = F_{PFD} \times N = \frac{F_{REF_IN}}{R_{DIV}} \times \left(A_{COUNTER} + Prescalar_{num} \times B_{COUNTER}\right) \tag{7}$$

Phase Frequency Detector (PFD) and Charge Pump Stage

The outputs of the RDiv and the N counter are fed into the PFD stage, where the two signals are compared in frequency and phase. The TRF3762 features an anti-backlash pulse, whose width is controllable by the user through the serial programming interface. The PFD feeds the charge pump, whose output current pulses are fed into an external loop filter, which eventually produces the tuning voltage needed to control the integrated VCO to the desired frequency.

Mux Out

MUX_OUT pin (39) provides a communication port to the microcontroller circuit. See Table 4 in the Application Information section.

Div 1/2/4

Div 1/2/4 is the frequency divider for the TRF3762. This circuit can be programmed thru the serial programming interface (SPI) to divide the output frequency of the VCO by 1, 2 or 4. This feature allows for the same loop filter design to be used for any of the 3 divide by modes, 1, 2 and 4. For example, if the VCO is running at 1499MHz to 1608MHz band then with the same exact circuit, run the output in the divide by 2 mode 749.5MHz to 804MHz band or in the divide by 4 mode 374.75MHz to 402MHz.

Serial interface

The programming interface pins (3, 4, 5) to the chip are the serial programming interface (SPI). The interface requires a Clock, Data, and Strobe signal to operate. See timing diagram Figure 11.

CHIP ENABLE

This feature provides a way to shut down the chip when not needed in order to conserve power. CHIP_EN Pin (2) needs to be High for normal operation.

Buffer Power Down

PD_OUTBUFF pin (1), when enabled in software can provide a -40dB reduction in the output power while the VCO is locked and running. This feature is to help with isolation between RX and TX.

 Copyright © 2008, Texas Instruments Incorporated

APPLICATION INFORMATION

Initial Calibration and Frequency Setup at Power Up

The integrated high performance VCO requires an internal frequency calibration at power up. To perform such calibration the following procedure is recommended:

- Apply 5V power supply to IC.
- Apply an input reference frequency to pin (38) and ensure the signal is stable.
- Turn on the TRF3762 using the chip enable pin (CHIP_EN, pin 2), by applying 5V.

Register 1

- Setup the device through Register 1 referencing Table 1.
  a. The first 4 bits of the 32-bit code sent to the chip are set DB <3:0> to 0000; which is the address of register 1.
  b. Bit 5, DB4, sets the soft reset for the chip. Soft reset allows for the registers to be reset without powering down the chip. If a soft reset is used then write to register 1 twice: once with DB4 set high and once with DB4 set low. Typically, this bit is only used when the chip has been powered up and registers 1, 2, and 3 have already been written to, so on power-up reset is not required, so DB4 is, by default, set low.
  c. DB <7: 5> sets the charge pump current based on the resistor value on pin 28 of the TRF3762 and the decimal value of Register 1, DB<7:5> used in Equation 1. This equation reduces to Equation 2, where N = decimal value of [Reg1 DB<7:5>].
  d. DB <9: 8> sets the mode of the chip. The mode is how the device will or will not divide down the VCO's frequency. There are 3 choices for the mode setting, divide by 1, 2 or 4 per Table 1. For example if 525MHz is required from the TRF3762 which has a main frequency of 1575MHz then the divide-by-4 mode is chosen by setting DB <9: 8> to 10.
  e. DB <11:10> controls the output buffer. Both of these are set to 00 by default, so the buffer is controlled internally. See Table 1 for more information.
  f. DB <25:12> sets the RDiv value. Once the calculations under the *Synthesizing a Selected Frequency* section have been completed the value is known, based on the external reference oscillator. The value for R is entered into the DB <25:12>. For example, if the reference oscillator is at a frequency (F_{REF_IN}) of 61.44MHz and a channel step size of 120kHz is required, which is also the frequency (F_{PFD}) the phase frequency detector will use to compare against the VCO's output frequency (F_{OUT}), then F_{REF_IN} /F_{PFD} = 512, which is entered as follows: MSB: LSB 0001000000000.
  g. By default, DB <27:26> are set to 00 for a 1.5ns delay on the anti-backlash pulse width. See Table 1 for more information.
  h. DB 28 is set to 1 for positive by default. See Table 1 for more information.
  i. DB 29 is set to 0 for normal operation. See Table 1 for more information.
  j. DB 30 is set to 0 by default. See Table 1 for more information.
  k. DB 31 is set to 0 by default. See Table 1 for more information.

Register 2

- Initiate calibration procedure by programming register 2 as follows: Reference Table 2
  a. The first 4 bits of the 32-bit code sent to the chip are set DB <3:0> to 0001; which is the address of register 2.
  b. Use bits DB<17, 4> of register 2 to specify the input reference frequency in MHz. The value is split into an integer and a fraction part. For example: to insert a f_{REF} of 30.72MHz, set:
     – DB<10, 4> (integer part) equal to 0011110 (30) and
     – DB<17, 11> (fraction part) equal to 1001000 (72).

c. Set DB<30:18> of register 2 to the desired frequency. For example: 2200MHz would be 0100010011000 (2200).
d. Set DB31of register 2 to 1 to start the calibration. The VCO calibration runs for 5ms. During the cal procedure it will not be possible to program register 2 and 3. At the end of the calibration, bit DB31 of register 2 resets to 0.
e. Subsequent frequency programming requires DB31 to be set to 0.

Register 3

- Completion of the frequency set up, on initial calibration, cannot proceed until 5ms has elapsed, due to full calibration, then it will require that the A and B values, the prescalar ratio, be known. See *Synthesizing a Selected Frequency* section below for calculation. Reference Table 3.
  a. The first 4 bits of the 32-bit code sent to the chip are set DB <3:0> to 0010; which is the address of register 3.
  b. DB<5:4> sets the prescalar ratio, 8/9, 16/17, 32/33, 64/65. For example: if 16/17 are required, set the register bits DB<5:4> to 01.
  c. DB<11:6> sets the A value for the N counter. For example: if A is 4, set DB<11:6> as follows: 000100 (4).
  d. DB<24:12> sets the B value for the N counter. For example: if B is 1156, set DB<24:12> as follows: 0010010000100 (4).
  e. DB<28:25> sets the TEST_MUX. This allows the user to check via the microcontroller the state of the TRF3762 by programming it to one of 6 states. The most common state to use is the Digital lock Detect which places the pin in a logic high state with indicates the VCO is locked.

Table 4. MUX-Out Settings

STATE	DB<28:25>	STATE	DB<28:25>
3-state o/p (High impedance state on Pin 39)	0000	RDiv o/p (Shows R-value on Pin 39)	0100
Digital lock Detect (High when locked on Pin 39)	0001	Analog lock detect (High when locked on Pin 39)	0101
N-Divider o/p (Shows N-value on Pin 39)	0010	Read back (read back register settings)	0110
DVDD (internal TI use)	0011	DGND (internal TI use)	0111

  f. DB29 sets the START LOCK, which is set to 0, on the initial frequency setup and then set to 1 on additional frequency changes.

Once all registers are written, the TRF3762 will lock to the desired frequency. In order to change the frequency once the initial calibration is complete, only registers 2 and 3 need to be reprogrammed. No calibration is required.

Re-Calibration After Power Up

Assuming the TRF3762 is powered up and operational, a VCO calibration is also possible without powering down the IC. To perform such calibration the following procedure is recommended:

- Set bit DB4 (RESET) of register 1 to 1. This performs a software reset and clears all registers of VCO calibration data. Once the reset command is issued then DB4 of register 1 will need to be set to 0.
- Repeat the *Initial Calibration and Frequency setup at Power up* section, skipping the power up section and performing the register programming sequence.

 Copyright © 2008, Texas Instruments Incorporated

Synthesizing a Selected Frequency

The TRF3762 is an integer-N PLL synthesizer, and because of its flexibility (14-bit RDiv, 6-bit A counter, 13-bit B counter, and dual modulus prescaler), is ideal for synthesizing virtually any desired frequency. If synthesizing a 900MHz local oscillator, with spacing capability (minimum frequency increment) of 200kHz, as in a typical GSM application, the choice of the external reference oscillator is beyond the scope of this section. However, if a 10MHz reference is selected, the settings are calculated to yield the desired output frequency and channel spacing. There is more than one solution to a specific set of conditions, so below is one way of achieving the desired result. First, select the appropriate RDiv counter value. Since a channel spacing of 200kHz is desired, the F_{PFD} is set to 200kHz. Calculate the RDiv value through:

$$RDiv = F_{REFIN}/F_{PFD} = 10MHz/ 200kHz = 50.$$

Assume a prescaler value of 16/17 is selected. This is a valid choice, since the prescaler output is well within the 200MHz limit (1805MHz / 16 = 112.8MHz). Select the appropriate A and B counter values.

$$RFOUT = F_{PFD} \times N = (F_{REFIN} / RDiv) \times (A \text{ counter} + \text{Prescalar numerator} \times B \text{ counter}).$$

Therefore, the following equation must be solved:

$$1805MHz = 200kHz \times (A + 8 \times B).$$

There are many solutions to this single equation with two unknowns; there are some basic constraints on the solution, since $3 \leq B \leq 8191$, and also $B \geq A$. So, if A = 1, solving the equation yields B = 564. One complete solution would be to choose:

RDiv = 50, A counter = 1, Bcounter = 564 and Prescalar = 16/17

resulting in the desired N counter value = 9025. This is how the A counter, B counter and prescalar make up the N counter.

When this procedure is complete the values for the N counter , R, and the prescalar ratio should be known. Registers 2 and 3 need to be set up for operation of the chip. See Table 2 and Table 3 for this procedure. Register 2 bits <DB30:DB18> 12:0 set the output frequency of the device along with register 3. See the *N-Divider* section under the *Functional Description*.

Application Schematic

Figure 15 shows a typical application schematic for the TRF3762. In this example, the output signal is taken differential using the 2 resistive pull-up resistors of the final output buffer. A single-ended and tuned load configuration is also available.

The loop filter components:

C1 = 680pF, R1 = 7.5kΩ, C2 = 10,000pF, R2 = 6.34kΩ, C3 = 330pF

are typical ones used for the plots shown above. Those values can be optimized differently according to the requirements of the different applications.

Copyright © 2008, Texas Instruments Incorporated

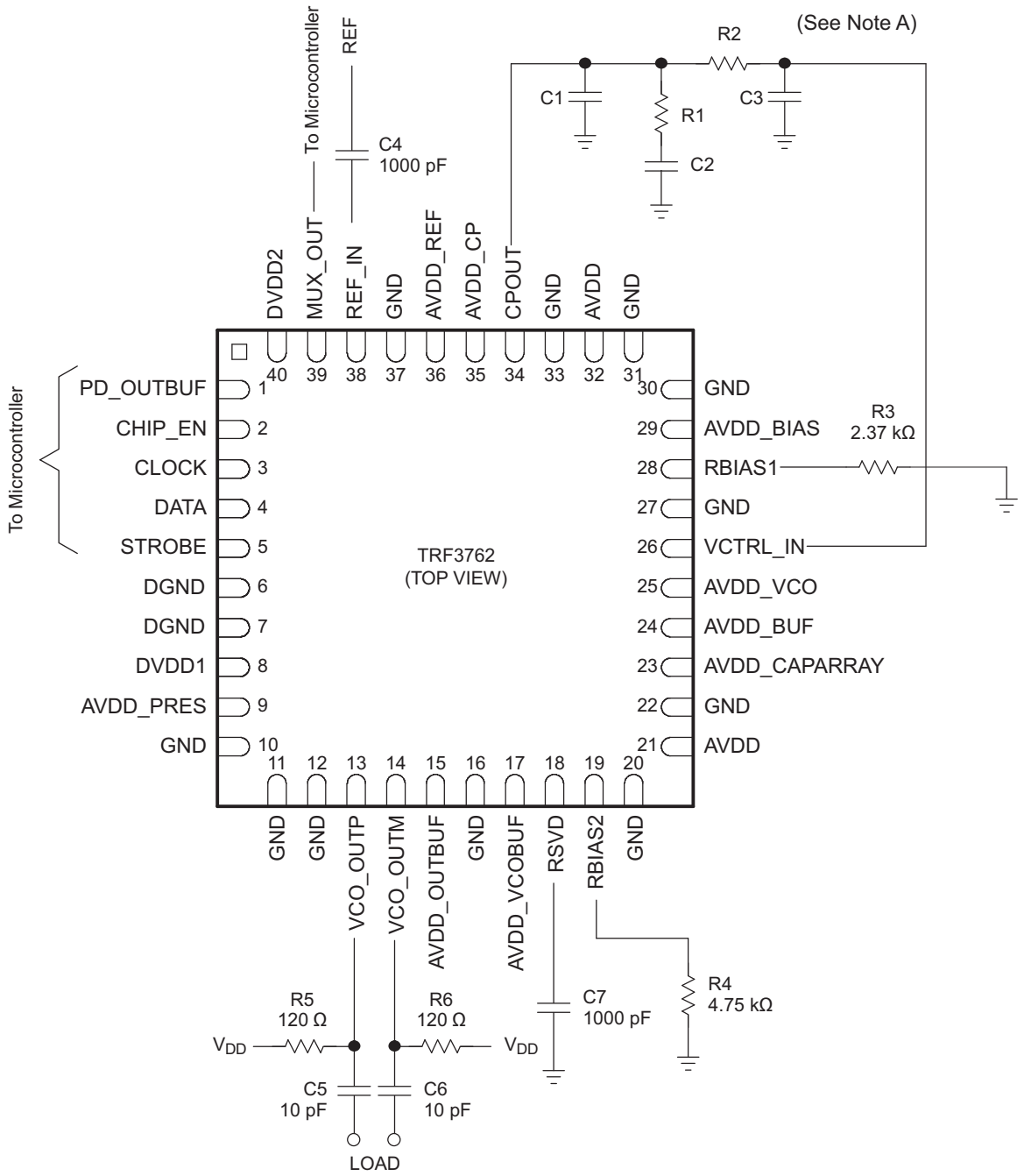

A. Refer to the Application Information section Loop Filter Design.

Figure 15. TRF3762 Application Schematic

Copyright © 2008, Texas Instruments Incorporated

Loop Filter Design

Numerous methodologies and design techniques exist for designing optimized loop filters for particular applications. The loop filter design can affect the stability of the loop, the lock time, the bandwidth, the extra attenuation on the reference spurs, etc. The role of the loop filter is to integrate and lowpass the pulses of the charge pump and eventually yield an output tuning voltage that drives the VCO. Several filter topologies can be implemented, including both passive and active. In this section, a third-order passive filter is used. For this example, assume these several design parameters. The internal VCO has a value of 23MHz/V, meaning that in the linear region, changing the tuning voltage of the VCO by 1V induces a change of the output frequency of about 23MHz. It is known that N = 4500 and Fpfd = 200kHz from our previous example. It is assumed that current setting in register 1 <DB7:DB5> is set to 100 and sets a maximum current of 5.6mA. TI recommends an Icp of 5.6mA, which give the best spur performance, but can be changed for different application. In addition, the bandwidth of the loop filter must be determined. This is a critical consideration as it affects the lock time of the system. Assuming an approximate bandwidth of around 20kHz is required and that for stability a phase margin of about 45 degrees is desired, the following values for the components of the loop filter can be derived. There is almost an infinite number of solutions to the problem of designing the loop filter and the designer is called to make tradeoff decisions for each application. Texas Instruments has provided a loopfilter program in the product folder for the TRF3762.

Some terms are interchangeable and are described and equated here:

- F_{com} = F_{PDF} which identify the comparing frequency or phase detector frequency which is also equal to the system channel step size. F_{OUT} must be a multiple of F_{com}.
- F_{min} is the lower frequency of the design band.
- F_{max} is the upper frequency of the design band.
- F_{ref} is the reference frequency for the PLL. Fref must be a multiple of F_{com}.
- K_{vco} = Kv expressed in MHz per Volt (MHz/V) which is the gain of the VCO. The TRF3762 internal VCO has a Kv = 23MHz/V.
- I_{cp} is the charge pump current. The TRF3762 is typically set to 5.6mA.
- F_c is the loop filter bandwidth which should be no more than 1/10 F_{com}.
- ϕ is phase margin in degrees. Values should be between 30 and 70. The higher the phase margin the better the stability of the PLL but the slower the lock time. 45 degrees is a good tradeoff.
- T3/T1 in percent is the percentage of the poles in the loop filter. Usually set to 45%. The higher the value (closer to 100%) the more the spurs are attenuated, but peaking occurs in the pass band of the loop filter.

Copyright © 2008, Texas Instruments Incorporated

$$F_{OUT} = \sqrt{F_{min}F_{max}} \tag{8}$$

$$N = \frac{F_{OUT}}{F_{com}} \tag{9}$$

$$\varpi_c = 2\pi F_c \tag{10}$$

$$T1 = \frac{\left(\frac{1}{\cos\phi}\right) - \tan\phi}{\varpi_c\left(1 + \frac{T3}{T1}\right)} \tag{11}$$

$$T3 = \left(\frac{T3}{T1}\right)T_1 \tag{12}$$

$$T2 = \frac{1}{\varpi_c^2\left(T1+T3\right)} \tag{13}$$

$$C1 = \frac{T1}{T2} \times \frac{K_{VCO}K\phi}{\varpi_c^2 N} \times \left[\frac{1 + \left(\varpi_c T2\right)^2}{\left(1 + \varpi_c^2 T1^2\right)\left(1 + \varpi_c^2 T3^2\right)}\right]^{\frac{1}{2}} \tag{14}$$

$$C2 = C1\left(\frac{T2}{T1} - 1\right), \quad C3 = \frac{C1}{10} \tag{15}$$

$$R1 = \frac{T2}{C2}, \quad R2 = \frac{T3}{C3} \tag{16}$$

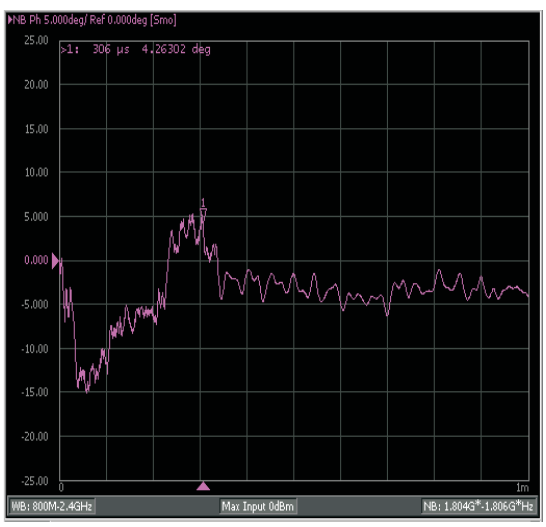

Figure 16. Phase Locktime

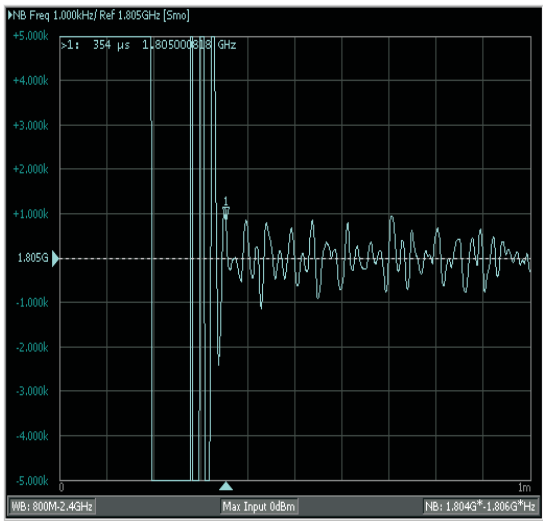

Figure 17. Frequency Locktime

Copyright © 2008, Texas Instruments Incorporated

Loop Filter Design Example

Given these parameters which were used for the lock time plot Figure 17:

- F_{min} = 1805 MHz
- F_{max} = 1936 MHz
- F_{com} = 200 KHz
- Icp = 7mA
- Kvco = 23 MHz
- Fc = 40 KHz
- Phase Margin = 35 degrees
- T3/T1 = 35%

Calculate F_{OUT} of design

$$F_{OUT} = \sqrt{F_{min}F_{max}} = 1870\text{MHz (rounded up)} \tag{17}$$

Next calculate N

$$N = \frac{F_{OUT}}{F_{com}} = 9350 \tag{18}$$

Then calculate ωc

$$\varpi_c = 2\pi F_c = 251.3 \times 10^3 \tag{19}$$

Now calculate T1-T3 to give the RC time constants.

$$T_1 = \frac{\left(\frac{1}{\cos\phi}\right) - \tan\phi}{\varpi_c\left(1 + {T_3}/{T_1}\right)} = 1.5 \times 10^{-6} \tag{20}$$

Use T1 to find T3

$$T_3 = \left({T_3}/{T_1}\right)T_1 = 537 \times 10^{-9} \tag{21}$$

Then use T1 and T3 to find T2

$$T_2 = \frac{1}{\varpi_C^2\left(T_1 + T_3\right)} = 7.6 \times 10^{-6} \tag{22}$$

Now C1, C2, C3, R1, and R2 are calculated using T1, T2, and T3.

$$C1 = \frac{T_1}{T_2} \times \frac{K_{VCO}K\phi}{\varpi_c^2 N} \times \left[\frac{1 + \left(\varpi_c T_2\right)^2}{\left(1 + \varpi_c^2 T_1^2\right)\left(1 + \varpi_c^2 T_3^2\right)}\right]^{\frac{1}{2}} = 110\text{pF} \tag{23}$$

$$C2 = C1\left(\frac{T_2}{T_1} - 1\right) = 436\text{pF} \tag{24}$$

$$C3 = \frac{C1}{10} = 11\text{pF} \tag{25}$$

Now using C2 and T2, find R2. Use C3 and T3 to find R3

$$R2 = \frac{T_2}{C_2} = 17k\Omega \tag{26}$$

$$R3 = \frac{T_3}{C_3} = 49k\Omega \tag{27}$$

R3 x C3 can be scaled using T3, so if C3 = 110pF, then R3 = 41 kΩ => 4.9 kΩ in the loop filter. R2 and C2 can be adjusted to improve the lock time. The actual values used in the lock time plot were optimized for lock time as well as using real valued components.

Layout/PCB Considerations

This section of the design of the complete PLL is of paramount importance in achieving the desired performance. Wherever possible, a multi-layer PCB board should be used, with at least one dedicated ground plane. A dedicated power plane (split between the supplies if necessary) is also recommended. The impedance of all RF traces (the VCO output and feedback into the PLL) should be controlled to 50Ω. All small value (10pF and 0.1μF) decoupling capacitors should be placed as close to the device pins as possible. It is also recommended that both top and bottom layers of the circuit board be flooded with ground, with plenty of ground vias dispersed as appropriate. Because the digital lines are not in use during normal operation of the device and are only used to program the device on start up and during frequency changes the analog grounds (GND) and digital grounds (DGND) are tied to the same ground plain. The most sensitive part of any PLL is the section between the charge pump output and the input to the VCO. This includes the loop filter components, and the corresponding traces. The charge pump is a precision element of the PLL and any extra leakage on its path can adversely affect performance. Extra care should be given to ensure that parasitics are minimized in the charge pump output, and that the trace runs are short and optimized. Similarly, it is also recommend that extra care is taken in ensuring that any flux residue is thoroughly cleaned and moisture baked out of the PCB. From an EMI perspective, and since the synthesizer is typically a small portion of a bigger, complex circuit board, shielding is recommended to minimize EMI effects.

Copyright © 2008, Texas Instruments Incorporated

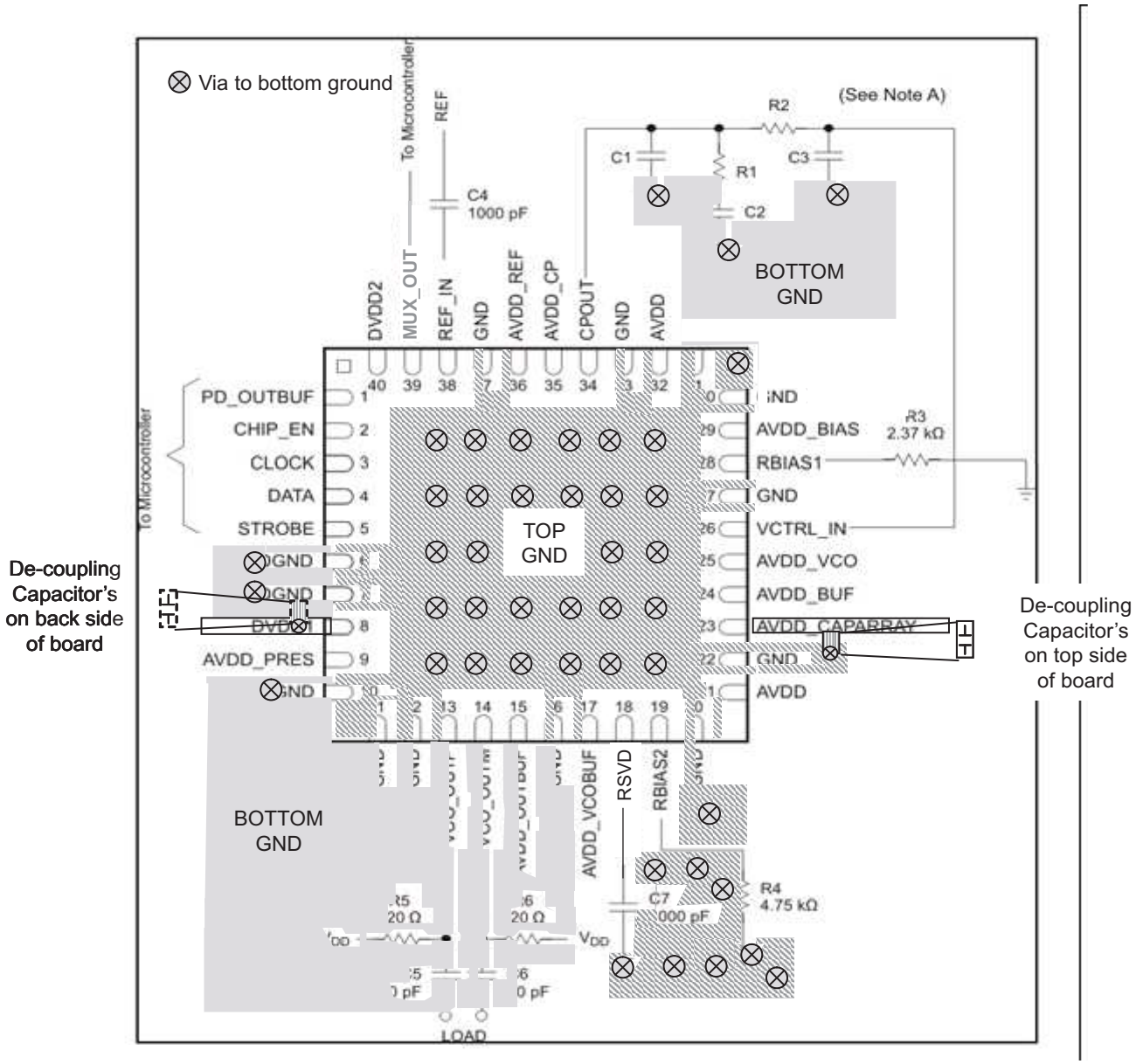

A. See the Application Information section for Loop Filter Design procedures.

Figure 18. TRF3762 Layout

Application Example for a High Performance RF Transmit Signal Chain

Much in the same way as described above, the TRF3762 is an ideal synthesizer to use in implementing a complete high performance RF transmitter chain such as the TSW3000 and TSW3003 Demonstration kits. Using a complete suite of high performance Texas Instruments components, a state-of-the-art transmitter can be implemented featuring excellent performance. Texas Instruments offers ideal solutions for the digital-to-analog conversion portion of transmitter as well as the analog and RF components needed to complete the transmitter. The baseband digital data is converted to I and Q signals through the dual DAC5687, which features a 16-bit interpolating dual digital-to-analog converter (DAC). The device incorporates a digital modulator, independent differential offset control, and I/Q amplitude control. The device is typically used in baseband mode or in low IF mode in conjunction with an analog quadrature modulator. The DAC5687, after filtering, feeds a TRF3703, which is a direct, upconversion IQ modulator. This device accepts a differential input voltage quadrature signal at baseband or low IF frequencies and outputs a modulated RF signal based on the LO drive frequency. The LO

drive input of the IQ modulator is generated by the TRF3762. The TRF3762 is a family of high performance, highly integrated frequency synthesizers, optimized for wireless infrastructure applications. The TRF3762 includes an integrated VCO and integer-N PLL. Different members of the TRF3762 family can be chosen for application specific VCO frequency ranges. In addition, the CDC7005 clocking solution can be used to clock the DAC and other portions of the transmitter. A block diagram of the proposed architecture is shown in Figure 19. For more details, contact Texas Instruments directly.

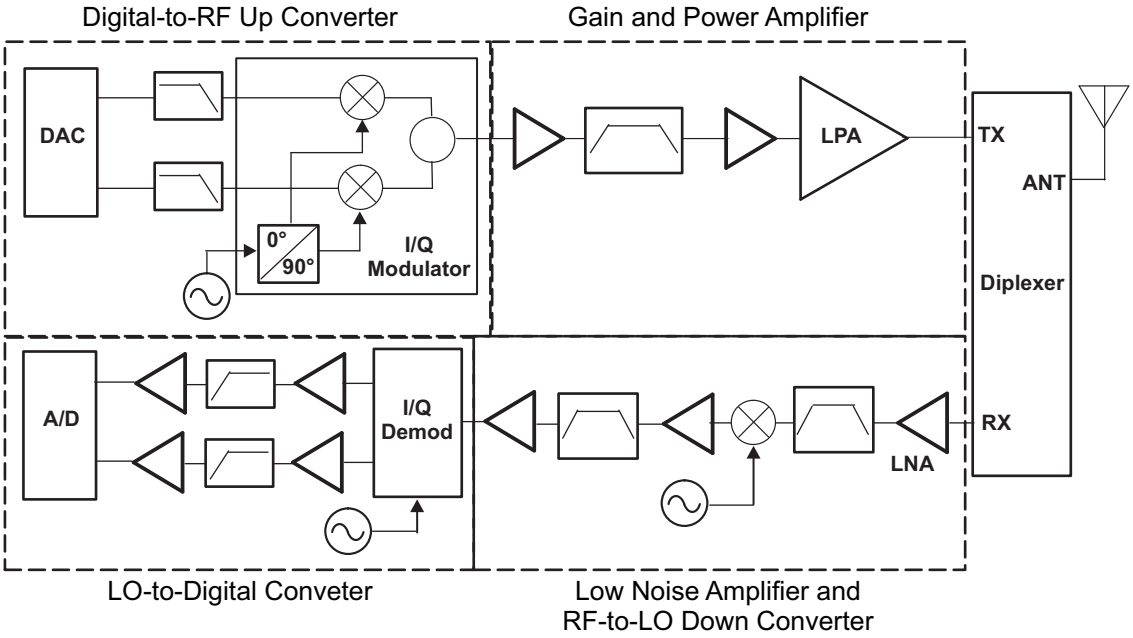

Figure 19. Transmit Chain Block Diagram

Copyright © 2008, Texas Instruments Incorporated

PACKAGING INFORMATION

Orderable Device	Status [1]	Package Type	Package Drawing	Pins	Package Qty	Eco Plan [2]	Lead/Ball Finish	MSL Peak Temp [3]
TRF3762-EIRHAR	ACTIVE	QFN	RHA	40	2500	Green (RoHS & no Sb/Br)	CU NIPDAU	Level-3-260C-168 HR
TRF3762-EIRHAT	ACTIVE	QFN	RHA	40	250	Green (RoHS & no Sb/Br)	CU NIPDAU	Level-3-260C-168 HR

[1] The marketing status values are defined as follows:
ACTIVE: Product device recommended for new designs.
LIFEBUY: TI has announced that the device will be discontinued, and a lifetime-buy period is in effect.
NRND: Not recommended for new designs. Device is in production to support existing customers, but TI does not recommend using this part in a new design.
PREVIEW: Device has been announced but is not in production. Samples may or may not be available.
OBSOLETE: TI has discontinued the production of the device.

[2] Eco Plan - The planned eco-friendly classification: Pb-Free (RoHS), Pb-Free (RoHS Exempt), or Green (RoHS & no Sb/Br) - please check http://www.ti.com/productcontent for the latest availability information and additional product content details.
TBD: The Pb-Free/Green conversion plan has not been defined.
Pb-Free (RoHS): TI's terms "Lead-Free" or "Pb-Free" mean semiconductor products that are compatible with the current RoHS requirements for all 6 substances, including the requirement that lead not exceed 0.1% by weight in homogeneous materials. Where designed to be soldered at high temperatures, TI Pb-Free products are suitable for use in specified lead-free processes.
Pb-Free (RoHS Exempt): This component has a RoHS exemption for either 1) lead-based flip-chip solder bumps used between the die and package, or 2) lead-based die adhesive used between the die and leadframe. The component is otherwise considered Pb-Free (RoHS compatible) as defined above.
Green (RoHS & no Sb/Br): TI defines "Green" to mean Pb-Free (RoHS compatible), and free of Bromine (Br) and Antimony (Sb) based flame retardants (Br or Sb do not exceed 0.1% by weight in homogeneous material)

[3] MSL, Peak Temp. -- The Moisture Sensitivity Level rating according to the JEDEC industry standard classifications, and peak solder temperature.

Important Information and Disclaimer: The information provided on this page represents TI's knowledge and belief as of the date that it is provided. TI bases its knowledge and belief on information provided by third parties, and makes no representation or warranty as to the accuracy of such information. Efforts are underway to better integrate information from third parties. TI has taken and continues to take reasonable steps to provide representative and accurate information but may not have conducted destructive testing or chemical analysis on incoming materials and chemicals. TI and TI suppliers consider certain information to be proprietary, and thus CAS numbers and other limited information may not be available for release.

In no event shall TI's liability arising out of such information exceed the total purchase price of the TI part(s) at issue in this document sold by TI to Customer on an annual basis.

TAPE AND REEL INFORMATION

REEL DIMENSIONS

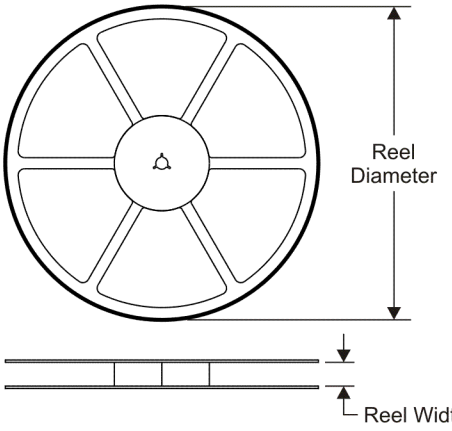

TAPE DIMENSIONS

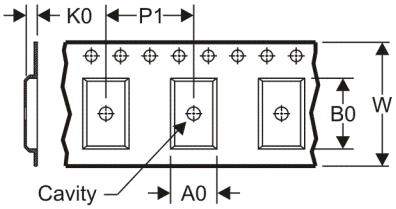

A0	Dimension designed to accommodate the component width
B0	Dimension designed to accommodate the component length
K0	Dimension designed to accommodate the component thickness
W	Overall width of the carrier tape
P1	Pitch between successive cavity centers

QUADRANT ASSIGNMENTS FOR PIN 1 ORIENTATION IN TAPE

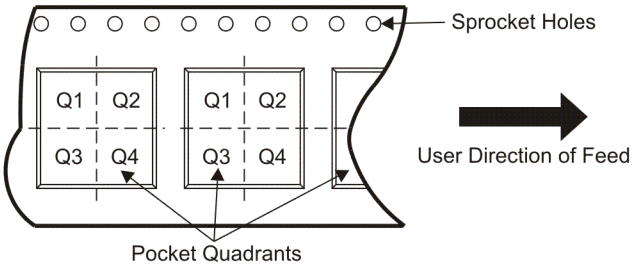

*All dimensions are nominal

Device	Package Type	Package Drawing	Pins	SPQ	Reel Diameter (mm)	Reel Width W1 (mm)	A0 (mm)	B0 (mm)	K0 (mm)	P1 (mm)	W (mm)	Pin1 Quadrant
TRF3762-EIRHAR	QFN	RHA	40	2500	330.0	16.4	6.3	6.3	1.5	12.0	16.0	Q2
TRF3762-EIRHAT	QFN	RHA	40	250	330.0	16.4	6.3	6.3	1.5	12.0	16.0	Q2

TAPE AND REEL BOX DIMENSIONS

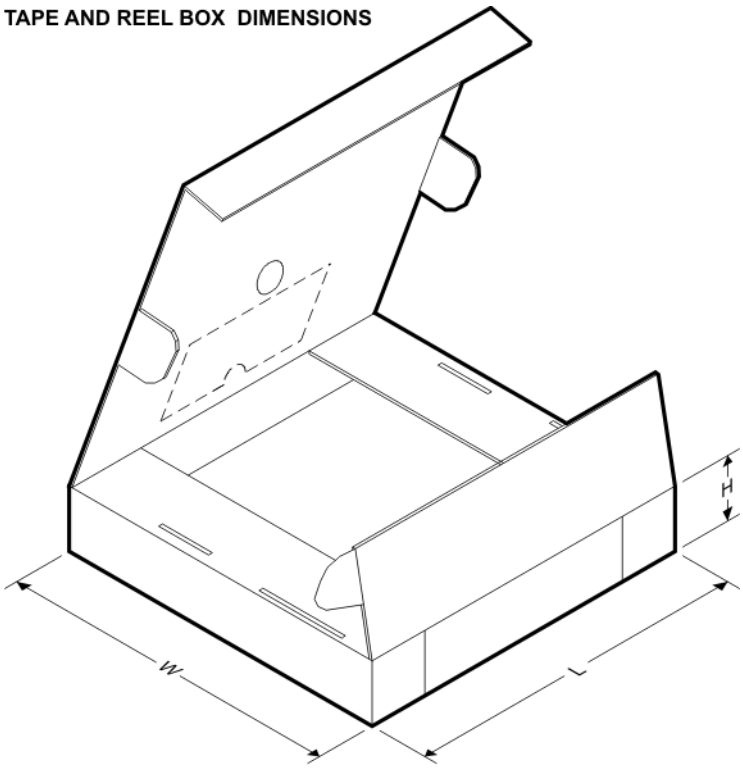

*All dimensions are nominal

Device	Package Type	Package Drawing	Pins	SPQ	Length (mm)	Width (mm)	Height (mm)
TRF3762-EIRHAR	QFN	RHA	40	2500	333.2	345.9	28.6
TRF3762-EIRHAT	QFN	RHA	40	250	333.2	345.9	28.6

RHA (S–PQFP–N40) PLASTIC QUAD FLATPACK

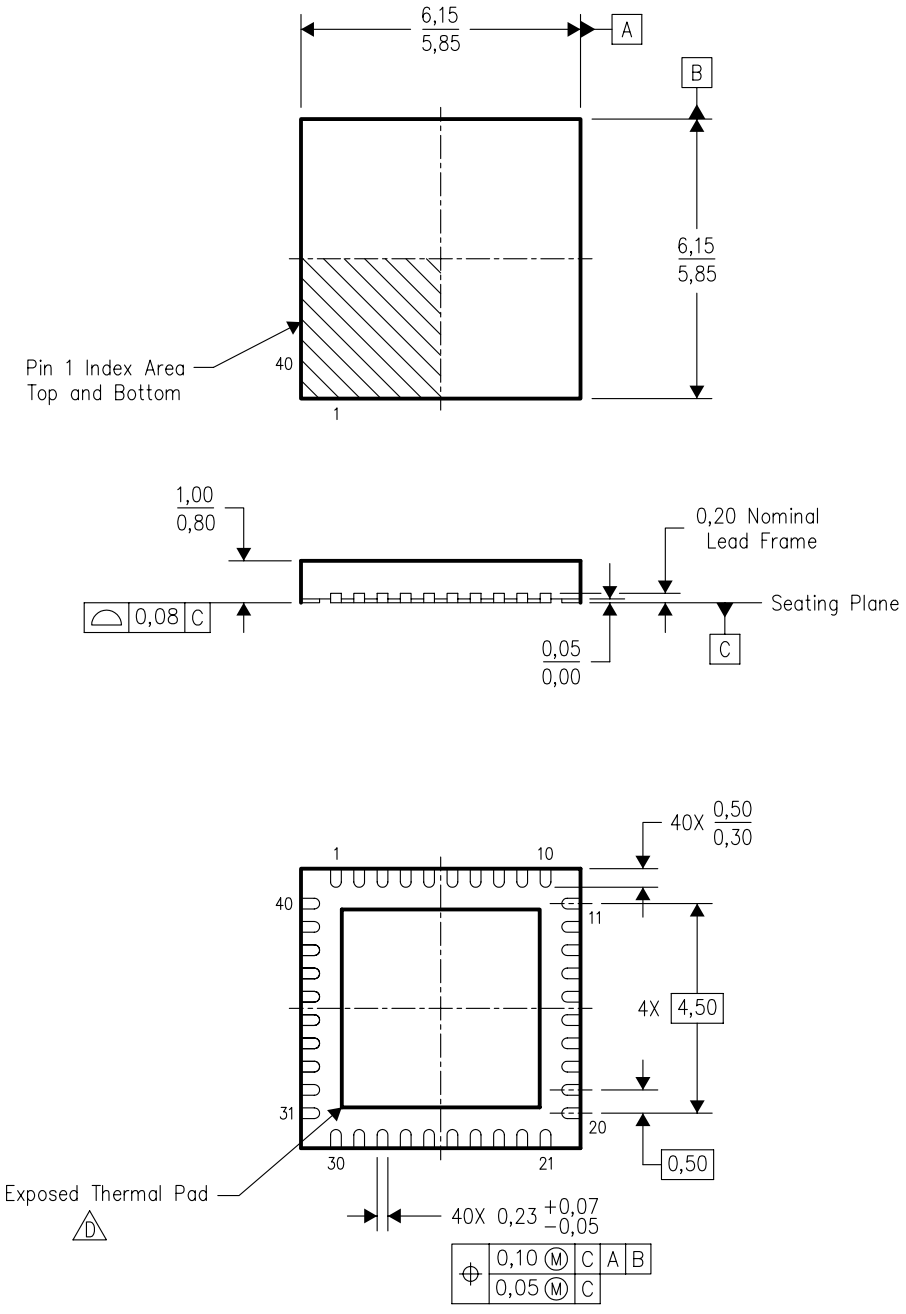

4204276/C 12/2004

NOTES:
A. All linear dimensions are in millimeters. Dimensioning and tolerancing per ASME Y14.5M–1994.
B. This drawing is subject to change without notice.
C. QFN (Quad Flatpack No–Lead) Package configuration.
D. The package thermal pad must be soldered to the board for thermal and mechanical performance. See the Product Data Sheet for details regarding the exposed thermal pad dimensions.
E. Package complies to JEDEC MO–220 variation VJJD–2.

THERMAL INFORMATION

This package incorporates an exposed thermal pad that is designed to be attached directly to an external heatsink. The thermal pad must be soldered directly to the printed circuit board (PCB). After soldering, the PCB can be used as a heatsink. In addition, through the use of thermal vias, the thermal pad can be attached directly to the appropriate copper plane shown in the electrical schematic for the device, or alternatively, can be attached to a special heatsink structure designed into the PCB. This design optimizes the heat transfer from the integrated circuit (IC).

For information on the Quad Flatpack No-Lead (QFN) package and its advantages, refer to Application Report, QFN/SON PCB Attachment, Texas Instruments Literature No. SLUA271. This document is available at www.ti.com.

The exposed thermal pad dimensions for this package are shown in the following illustration.

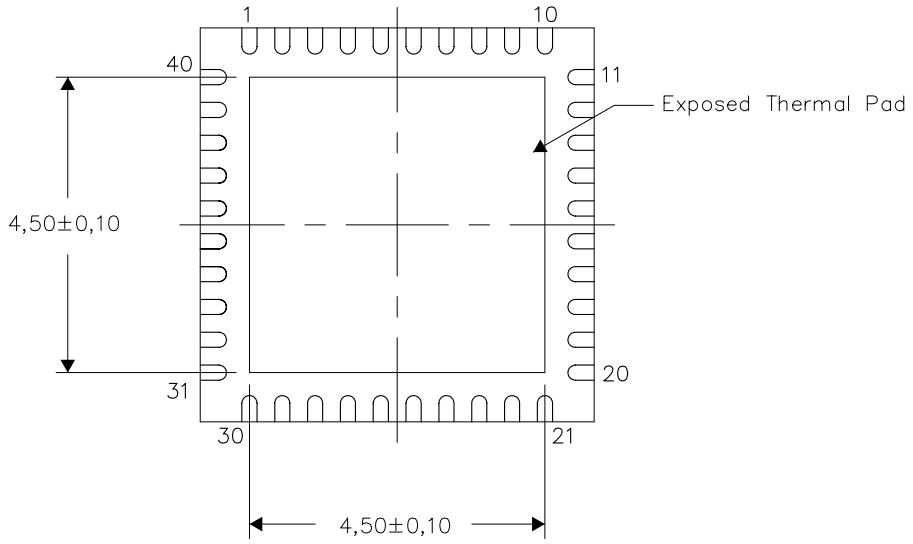

Bottom View

NOTE: All linear dimensions are in millimeters

Exposed Thermal Pad Dimensions

RHA (S–PQFP–N40)

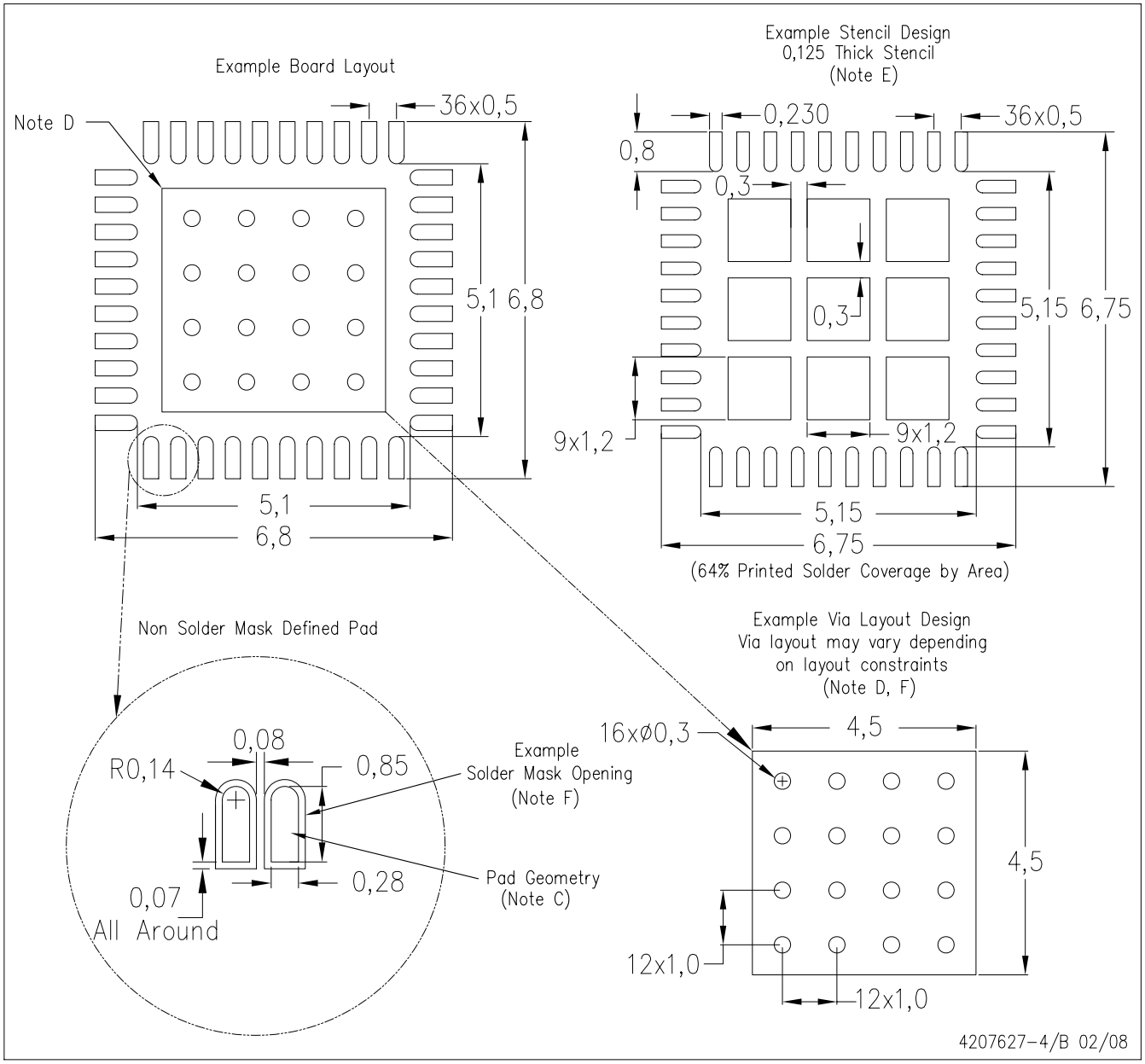

NOTES:
- A. All linear dimensions are in millimeters.
- B. This drawing is subject to change without notice.
- C. Publication IPC–7351 is recommended for alternate designs.
- D. This package is designed to be soldered to a thermal pad on the board. Refer to Application Note, Quad Flat–Pack Packages, Texas Instruments Literature No. SCBA017, SLUA271, and also the Product Data Sheets for specific thermal information, via requirements, and recommended board layout. These documents are available at www.ti.com <http://www.ti.com>.
- E. Laser cutting apertures with trapezoidal walls and also rounding corners will offer better paste release. Customers should contact their board assembly site for stencil design recommendations. Refer to IPC 7525 for stencil design considerations.
- F. Customers should contact their board fabrication site for recommended solder mask tolerances and via tenting recommendations for vias placed in the thermal pad.

IMPORTANT NOTICE

Texas Instruments Incorporated and its subsidiaries (TI) reserve the right to make corrections, modifications, enhancements, improvements, and other changes to its products and services at any time and to discontinue any product or service without notice. Customers should obtain the latest relevant information before placing orders and should verify that such information is current and complete. All products are sold subject to TI's terms and conditions of sale supplied at the time of order acknowledgment.

TI warrants performance of its hardware products to the specifications applicable at the time of sale in accordance with TI's standard warranty. Testing and other quality control techniques are used to the extent TI deems necessary to support this warranty. Except where mandated by government requirements, testing of all parameters of each product is not necessarily performed.

TI assumes no liability for applications assistance or customer product design. Customers are responsible for their products and applications using TI components. To minimize the risks associated with customer products and applications, customers should provide adequate design and operating safeguards.

TI does not warrant or represent that any license, either express or implied, is granted under any TI patent right, copyright, mask work right, or other TI intellectual property right relating to any combination, machine, or process in which TI products or services are used. Information published by TI regarding third-party products or services does not constitute a license from TI to use such products or services or a warranty or endorsement thereof. Use of such information may require a license from a third party under the patents or other intellectual property of the third party, or a license from TI under the patents or other intellectual property of TI.

Reproduction of TI information in TI data books or data sheets is permissible only if reproduction is without alteration and is accompanied by all associated warranties, conditions, limitations, and notices. Reproduction of this information with alteration is an unfair and deceptive business practice. TI is not responsible or liable for such altered documentation. Information of third parties may be subject to additional restrictions.

Resale of TI products or services with statements different from or beyond the parameters stated by TI for that product or service voids all express and any implied warranties for the associated TI product or service and is an unfair and deceptive business practice. TI is not responsible or liable for any such statements.

TI products are not authorized for use in safety-critical applications (such as life support) where a failure of the TI product would reasonably be expected to cause severe personal injury or death, unless officers of the parties have executed an agreement specifically governing such use. Buyers represent that they have all necessary expertise in the safety and regulatory ramifications of their applications, and acknowledge and agree that they are solely responsible for all legal, regulatory and safety-related requirements concerning their products and any use of TI products in such safety-critical applications, notwithstanding any applications-related information or support that may be provided by TI. Further, Buyers must fully indemnify TI and its representatives against any damages arising out of the use of TI products in such safety-critical applications.

TI products are neither designed nor intended for use in military/aerospace applications or environments unless the TI products are specifically designated by TI as military-grade or "enhanced plastic." Only products designated by TI as military-grade meet military specifications. Buyers acknowledge and agree that any such use of TI products which TI has not designated as military-grade is solely at the Buyer's risk, and that they are solely responsible for compliance with all legal and regulatory requirements in connection with such use.

TI products are neither designed nor intended for use in automotive applications or environments unless the specific TI products are designated by TI as compliant with ISO/TS 16949 requirements. Buyers acknowledge and agree that, if they use any non-designated products in automotive applications, TI will not be responsible for any failure to meet such requirements.

Following are URLs where you can obtain information on other Texas Instruments products and application solutions:

Products		**Applications**	
Amplifiers	amplifier.ti.com	Audio	www.ti.com/audio
Data Converters	dataconverter.ti.com	Automotive	www.ti.com/automotive
DSP	dsp.ti.com	Broadband	www.ti.com/broadband
Clocks and Timers	www.ti.com/clocks	Digital Control	www.ti.com/digitalcontrol
Interface	interface.ti.com	Medical	www.ti.com/medical
Logic	logic.ti.com	Military	www.ti.com/military
Power Mgmt	power.ti.com	Optical Networking	www.ti.com/opticalnetwork
Microcontrollers	microcontroller.ti.com	Security	www.ti.com/security
RFID	www.ti-rfid.com	Telephony	www.ti.com/telephony
RF/IF and ZigBee® Solutions	www.ti.com/lprf	Video & Imaging	www.ti.com/video
		Wireless	www.ti.com/wireless

Mailing Address: Texas Instruments, Post Office Box 655303, Dallas, Texas 75265
Copyright © 2008, Texas Instruments Incorporated