Part	L	Tol	R_{DC}	I_{DC}
	(μH)	%	MAX	I_N
			(Ω)	(A)
CD43-1R0	1.0 @7.96 MHz	M	48.70m	2.6
CD43-1R4	1.5 @7.96 MHz	M	56.20m	2.5
CD43-1R8	1.8 @7.96 MHz	M	63.70m	2
CD43-2R2	2.2 @7.96 MHz	M	71.20m	1.8
CD43-2R7	2.7 @7.96 MHz	M	78.70m	1.6
CD43-3R3	3.3 @7.96 MHz	M	86.20m	1.4
CD43-3R9	3.9 @7.96 MHz	M	93.70m	1.3
CD43-4R7	4.7 @7.96 MHz	M	108.70m	1.2
CD43-5R6	5.6 @7.96 MHz	M	125.70m	1
CD43-6R8	6.8 @7.96 MHz	M	131.20m	1
CD43-8R2	8.2 @7.96 MHz	M	146.20m	0.8
CD43-100	10 @2.52 MHz	M	0.182	1
CD43-120	12 @2.52 MHz	M	0.21	1
CD43-150	15 @2.52 MHz	M	0.235	0.9
CD43-220	22 @2.52 MHz	M	0.378	0.7
CD43-270	27 @2.52 MHz	M	0.522	0.6
CD43-330	33 @2.52 MHz	K	0.54	0.6
CD43-390	39 @2.52 MHz	K	0.587	0.5
CD43-470	47 @2.52 MHz	K	0.844	0.4
CD43-560	56 @2.52 MHz	K	0.937	0.4
CD43-680	68 @2.52 MHz	K	1.117	0.4

SPECIFICATION

TYPE = CD43
CONSTRUCTION = SURFACE MOUNT POWER INDUCTOR
TERIMAL COATING = NICKEL
OPERATING TEMP. = -40 TO +85˚C
STORAGE TEMP = -55 TO +125˚C
INSULATION RESISTANCE = 100MOhm. 100V TERMINAL-CORE
DIELECTRIC STREGTH = 250Vac TERMINAL-CORE
HUMIDITY EFFECTS = L±5 @ 95%RH, 40˚C, 1HR
Q±5 @ 95%RH, 40˚C, 1HR
PACKAGING = 2000PCS/REEL
MARKING = 3 CHARACTERS, VALUE

NOTE

TOLERANCES K=10%; M=20%.

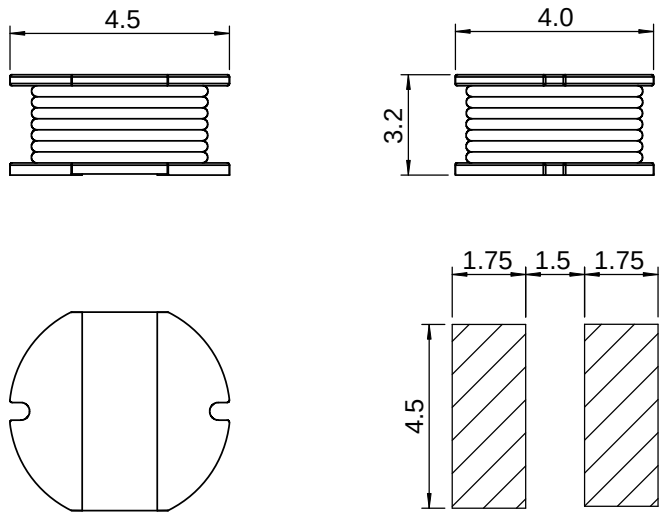

PROPRIETARY AND CONFIDENTIAL
THE INFORMATION CONTAINED IN THIS DRAWING IS THE SOLE PROPERTY OF AIT COMPONENTS LTD ANY REPRODUCTION IN PART OR AS A WHOLE WITHOUT THE WRITTEN PERMISSION OF AIT COMPONENTS LTD IS STRICTLY PROHIBITED.

	NAME	DATE
DRAWN		
CHECKED		
ENG APPR.		

UNLESS OTHERWISE SPECIFIED
DIMENSIONS ARE IN MILLIMETERS
TOLERANCES:
ONE PLACE DECIMAL +/-0.3
TWO PLACE DECIMAL +/-0.13
ANGLE +/-1 DEGREE

MATERIAL --
FINISH --

DO NOT SCALE DRAWING

AIT COMPONENTS LTD
www.aitcomponents.com

TITLE:
CD43 SMD POWER INDUCTOR

SIZE A | DWG. NO. CD43 SMD INDUCTOR | REV. 00
SCALE:1:1 | SHEET 1 OF 1