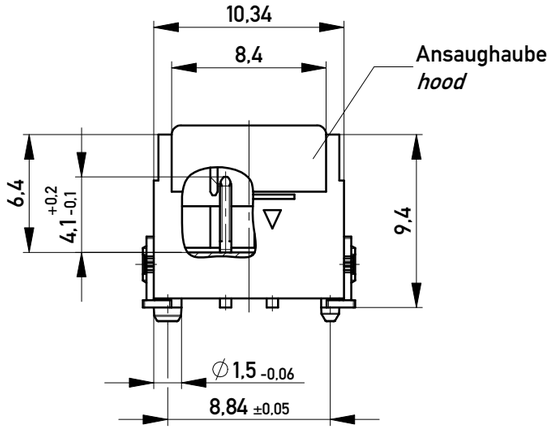

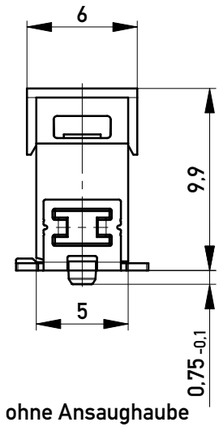

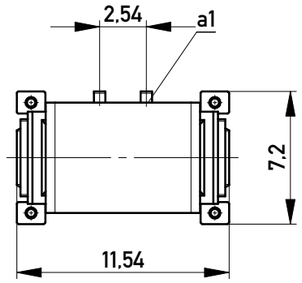

ohne Ansaughaube
without hood

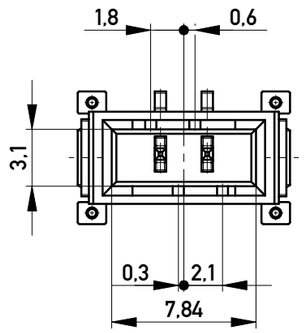

Verpackt im Gurt in Anlehnung an DIN IEC 60286-3
Tape on Reel Packaging according to DIN IEC 60286-3
Verpackungseinheit: 320 Stück
Packaging unit: 320 pcs

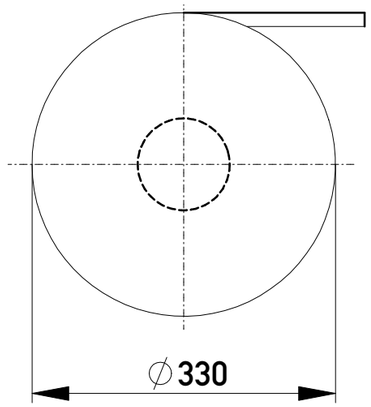

Leiterplatten-Layout Vorschlag für SMT
PCB-Layout Proposal for SMT

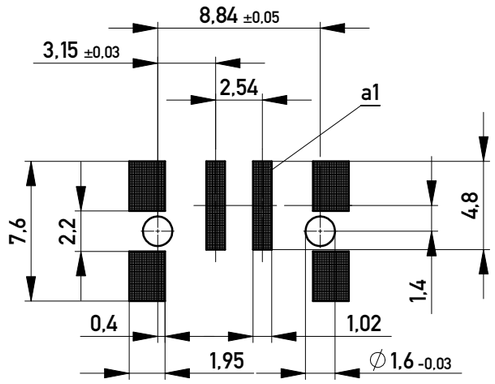

Anforderungsstufe 1
Performance Level 1

Kontaktbereich vergoldet
Mating Area gold plating

Anschlussbereich verzinnt 4-6 µm
Terminal Area 4-6 µm tin plating

Koplanarität der Anschlüsse ≤ 0,1 mm
Coplanarity Area of Termination ≤ 0,1 mm

Abspulrichtung - *Reel off Direction*

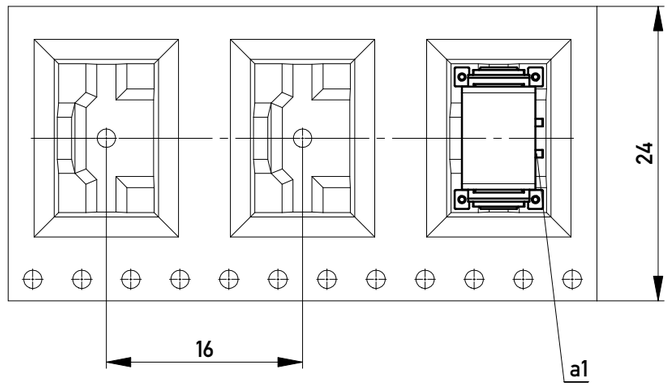

Information: Codierung, schwarz - *coding, black*	Tolerances	All Dimensions in mm	Scale 3:1
All rights reserved. Only for Information. To ensure that this is the latest version of this drawing, please contact one of the ERNI companies before using.	Subject to modification without prior notice. Drawing will not be updated.		Designation: M 2,54 SRC-P, 2-polig
		www.ERNI.com	100303210083 — K — A3
g — 26.05.2015			Class: SRCP
Index — Date			

Copyright by ERNI GmbH
Proprietary notice pursuant to ISO 16016 to be observed.