P/N
CC
CCCE
CCSF
CCCESF

REVISIONS				
ZONE	REV.	DESCRIPTION(S)	DATE	BY
–	A	ECO 21063	03.10.08	DKN

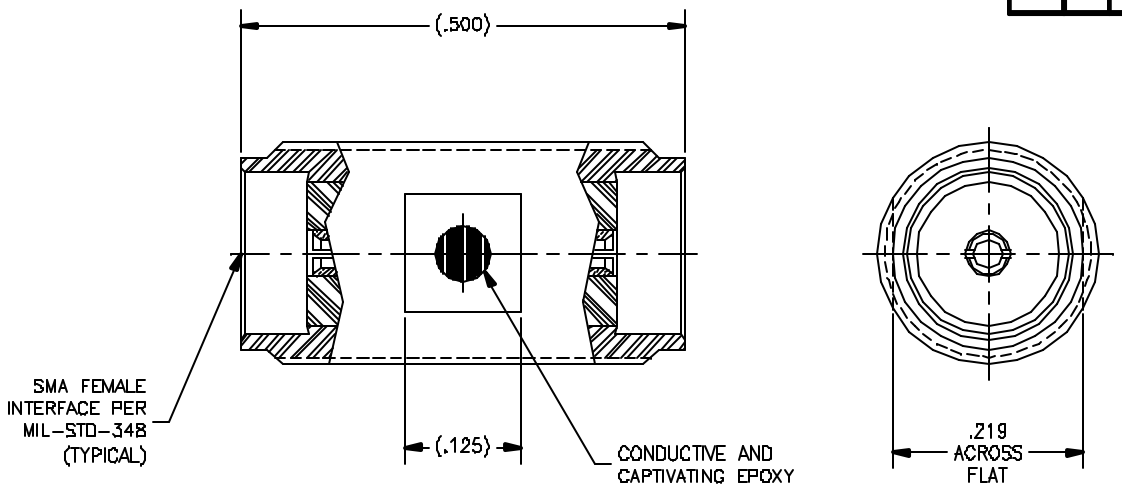

DRAWING NO. 5191 REV. A

MATERIAL:	ELECTRICAL:	MECHANICAL:	ENVIRONMENTAL:
Body: 303 sst per ASTM A-582. Center Conductor: BeCu alloy per ASTM B-196. Insulator: PTFE per ASTM D-1710. Epoxy: Sigma Vary Flex Type HV. Conductive Epoxy: Ableband 16-1.	Impedance: 50 Ohms nominal. Freqancy Range: DC to 18.0 GHz. VSWR: 1.10 + .008 x f(GHz). Insertion Loss: .06√f (GHz). Working Voltage: 335 Vrms max @ sea level. Dielectric Withstanding Voltage: 1000 Vrms min. R.F. HiPot Voltage: 670 Vrms min @ 5MHz. Corona Level: 250 Vrms @ 70,000 ft. Insulation Resistance: 5000 MegOhms min. R.F. Leakage: −(60 − fGHz) dB Contact Resistance: Center Contact: Initial environment: 3.0 Milliohm max. After environment: 4.0 Milliohm max. Outer Contact: Initial environment: 2.0 Milliohm max. After environment: NA	Mating Characteristics: Interface per Mil-Std-348. Force To Engage & Disengage: Torque: 2 inch-pounds max. Longitudinal Force: NA. Center Contact Retention: Axial Force: 6 pounds min. Connector Durability: 500 cycles min @ 12 cycles/minute max. Permeability: Less than 2.0 mu. Center Cativation: Axial: 6 lbs max. Radial: 4 inch-ounce max.	Temperature Range: −65° to +165°. Thermal Shock: Mil-Std-202, Method 107, Test Cond. B. Moisture Resistance: Mil-Std-202, Method 106, No measurements at high humidity. Insulation resistance shall be at least 200 MegOhms within 5 minutes after removal from humidity. Corrosion: Mil-Std-202, Method 101, Test Cond. B. Vibration: Mil-Std-202, Method 204, Test Cond. D. Shock: Mil-Std-202, Method 213, Test Cond. I.

FINISH:

Body & Center Conductor:
Gold plate per ASTM B-488, over nickel under plate per AMS-QQ-N-290.

APPLICABLE TENSOLITE DOCUMENTS

WORK STD	PROD INST	ASSY INST
NA	NA	NA

NOTICE

THIS DRAWING EMBODIES A CONFIDENTIAL, PROPRIETARY DESIGN CREATED BY TENSOLITE CORPORATION AND ALL RIGHTS MANUFACTURE REPRODUCTION, USE, AND SALE, NOTWITHSTANDING THE FOREGOING, THE DESIGN HAS BEEN DISCLOSED TO THE RECEIVING PARTY UNDER A CONFIDENTIAL RELATIONSHIP FOR A LIMITED PURPOSE AND THE RECEIVING PARTY BY ACCEPTING THIS DRAWING NOT IN SUPPLY WE DISCLOSE ANY INFORMATION REGARDING IT TO ANY UNAUTHORIZED PERSON TO INCORPORATE IN OTHER PRODUCTS ANY SPECIAL FEATURES REGULAR TO THIS DESIGN. ALL PATENT RIGHTS CREATED ARE EXPRESSLY RESERVED BY TENSOLITE CORPORATION, LONG BEACH, CALIFORNIA 90810.

TOLERANCES AND NOTES
EXCEPT AS NOTED
DIMENSIONS ARE IN INCHES.
LINEAR .XX ±.010 .XXX ±.005 ANGULAR ± 1/2
FRACTION ± 1/32
1. MACHINE FINISH: 63 RMS
2. BREAK ALL SHARP EDGES .010 MAX.
3. MACHINED FILLETS .005 MAX.
4. MACHINED SURFACE TRUNCE TO SUPPORTIVE AXIS WITHIN .004 INCHES PER INCH.
5. MACHINED DIAMETERS CONCENTRIC WITHIN .005 T.I.R.
6. DIMENSIONS TO BE MET BEFORE PLATING.
7. CHAMFER ALL THREADS 45°.
8. THREADS PER H-28.
9. REMOVE PRIMED EDGES BY TUMBLER.
10. REMOVE ALL BURRS.

MATERIAL					
–		–	–	–	

APPROVAL DETAILS		DATE
DRAWN BY	ATV	03.07.02
CHECKED BY		
TEST ENGR		
QUALITY		
DESIGN ENGR	ATV	03.11.08
MFG ENGR		

Tensolite
HIGH PERFORMANCE CABLES & INTERCONNECT SYSTEMS
Long Beach, California 90810

TITLE: SMA FEMALE TO SMA FEMALE STRAIGHT ADAPTER

SCALE: 10:1 UNLESS OTHERWISE SPECIFIED: _OL\ SHEET 1 OF 1

SIZE C CAGE CODE 30990 DRAWING NO. 5191 REV. A

ENG-DWG REV. B