General Specifications

MATERIALS
- » Cover: Stainless steel
- » Base & Stem: LCP High-temp thermoplastic in black color
- » Contact: Alloy copper
- » Terminals: Brass

MECHANICAL
- » Mechanical Life: 10,000 cycles
- » Operating Force: 200±150 gf
- » Operating Temperature: -20°C to +70°C
- » Storage Temperature: -20°C to +70°C

ELECTRICAL
- » Electrical Life: 10,000 cycles
- » Non-Switching Rating: 100mA, 50VDC
- » Switching Rating: 25mA, 24VDC
- » Contact Resistance: 100mΩ max.
- » Insulation Resistance: 100MΩ min. (500VDC)

SOLDERING PROCESSES
- » Hand Soldering: 30 watts, 350°C, 5 sec.
- » Reflow Soldering (SMT Terminals): 260°C

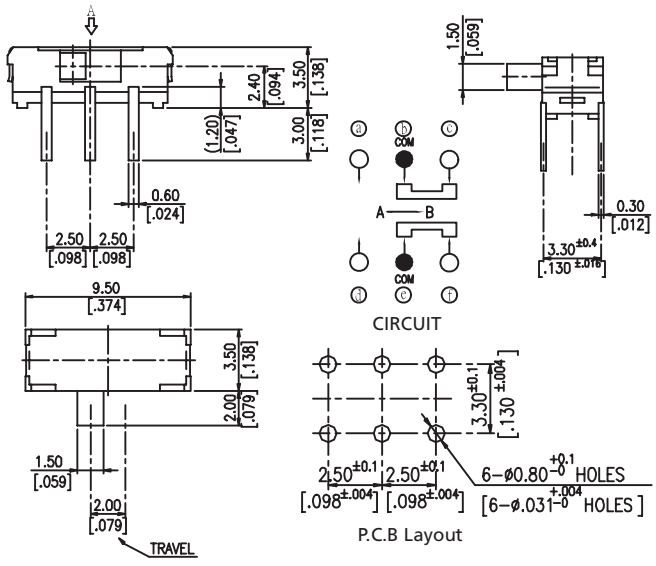

SB40H2... Horizontal THT, 2P2T

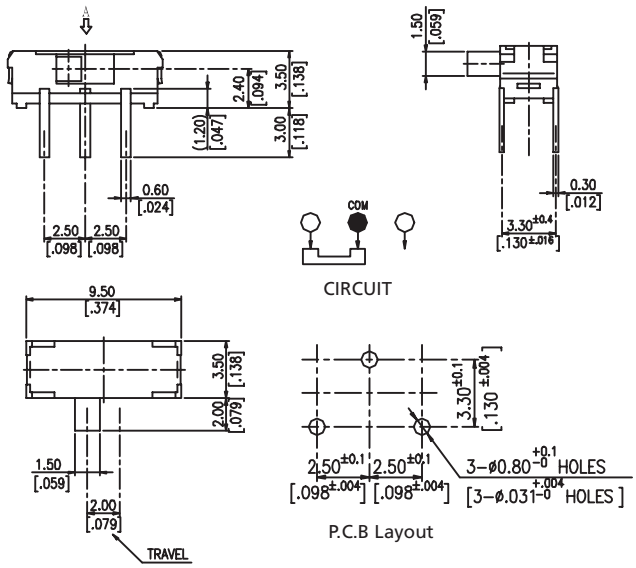

SB40H1... Horizontal THT, 1P2T

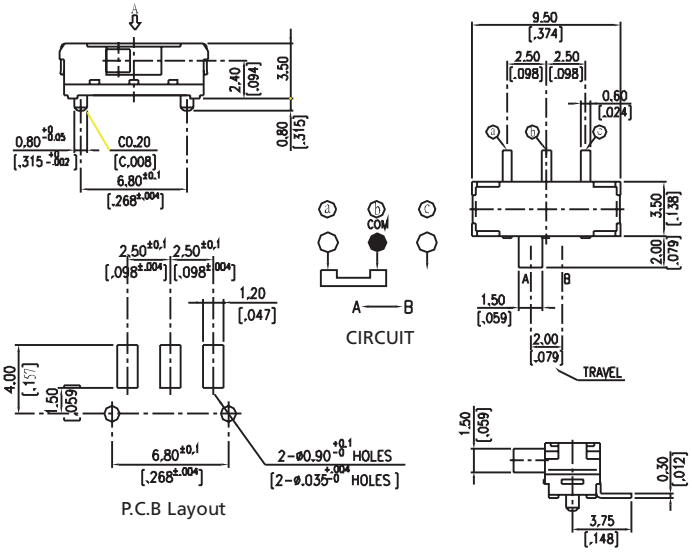

SB40S1_1... Horizontal SMT, 1P2T, with Pilot

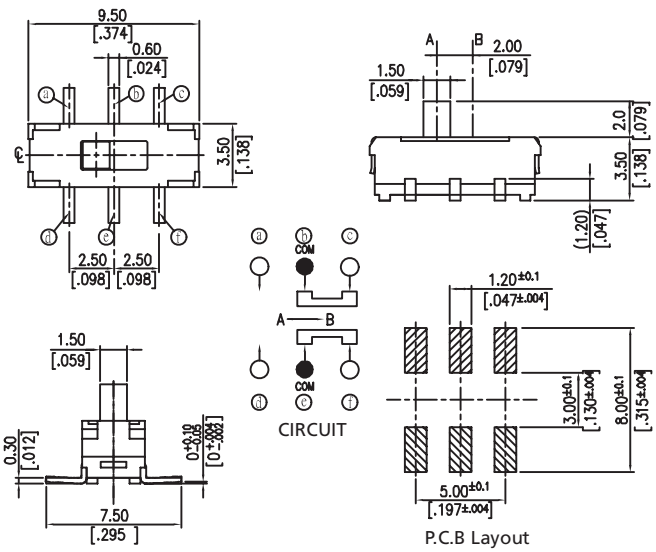

SB40S2_1... Vertical SMT, 2P2T, with Pilot

How to order:

SB40 [1] [2] [3] [4] [5] [6] [7] [8] [9]

1 SLIDE FUNCTION:
- H Horizontal THT Slide
- SH Horizontal SMT Slide (only for 1P2T)
- SM Vertical SMT Slide

2 PINS:
- 1 1P2T
- 2 2P2T

General Tolerance :± 0.2mm

3 TERMINALS LENGTH (Only for THT Terminals):
- N 3.0 mm (Standard)
- S 0.9 mm
- K 1.0 mm
- M 1.5 mm
- G 1.8 mm
- L 2.2 mm
- V 2.5 mm

4 STEM LENGTH (Only for Horizontal Slide Type)
- 40 4.0mm
- 32 3.2mm

5 PILOT:
- C Without Pilot (only for SB40H/SM)
- P Base with Pilot

6 STEM DIRECTION:
- L Stem on the Left
- R Stem on the Right

7 ROHS & LEAD FREE
- V RoHs & Lead Free Solderable
- H Halogen Free

8 PACKAGING:
- BK Bulk
- TB Tube (only for SB40H)
- TR Tape & Reel

9 CUSTOMER SPECIALS:
According special customer requests:
- UU Gold plated Terminals and Contacts