MARK	DATE	REMARKS
△1		
△2		

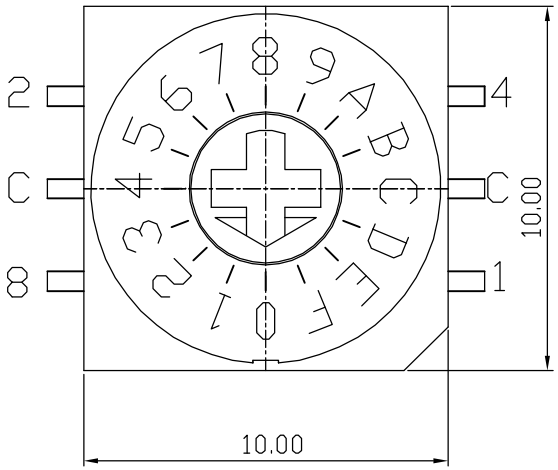

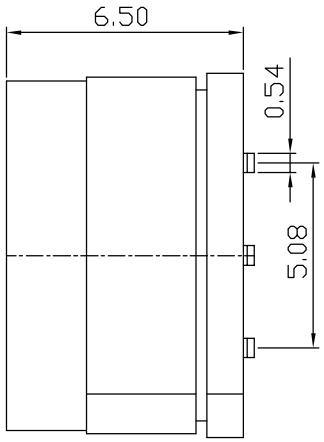

SPECIFICATION

1. Rating : 150mA, 42V DC (Switching)
   200mA, 42V DC (None-Switching)
2. Contact Resistance : 80mΩ Max
3. Insulation Resistance : 100MΩ Min
4. Operating Force : 700gf Max
5. Life cycle : 10,000 steps

		Real Code				
		C	1	2	4	8
10 Position	0	●				
	1	●	●			
	2	●		●		
	3	●	●	●		
	4	●			●	
	5	●	●		●	
	6	●		●	●	
	7	●	●	●	●	
	8	●				●
	9	●	●			●
16 Position	A	●		●		●
	B	●	●	●		●
	C	●			●	●
	D	●	●		●	●
	E	●		●	●	●
	F	●	●	●	●	●

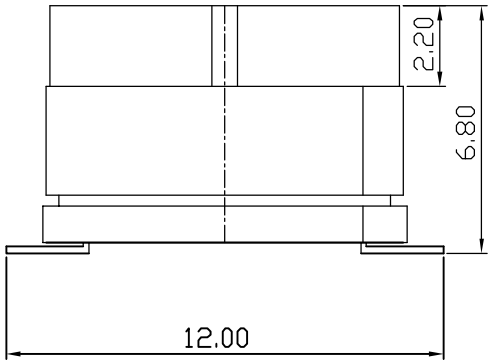

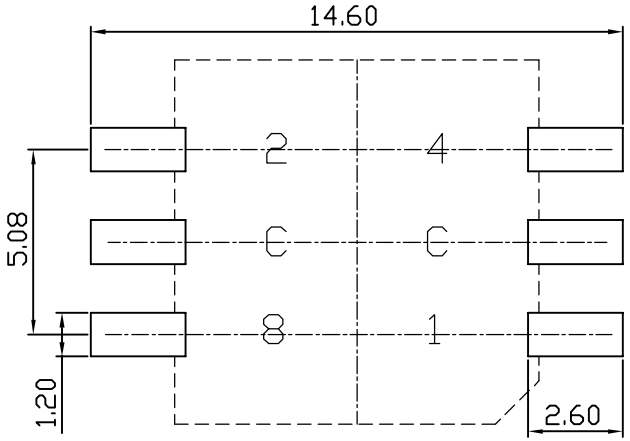

P.C.B DIMENSION

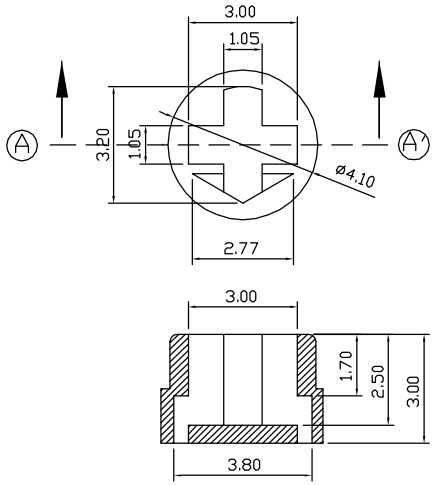

SECTION (A-A')

APPD	CHKD	D'SGD	TITLE.	ROTARY DIP SWITCH	
K.L LEE	J.P ROH	H.S LEE	MODEL NO.	TER-16S	REV A
			SUNGMUN ELECTRONICS CO., LTD.		