0.8mm SUB-MICRO HEADERS
1.00mm MICRO HEADERS

.031" [0.8] & .039" [1.00] CENTERLINE

MPH & SPH / MRS & SRS

0.8mm SUB-MICRO HEADERS

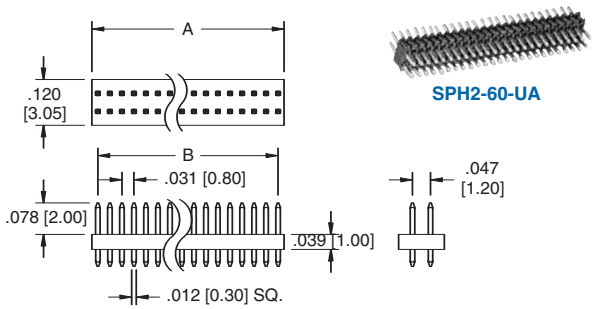

SPH2-60-UA

A = .031 [.80] X No of Positions Per Row
B = .031 [.80] X No of Spaces Per Row

0.8mm Male Header SPH2 Series

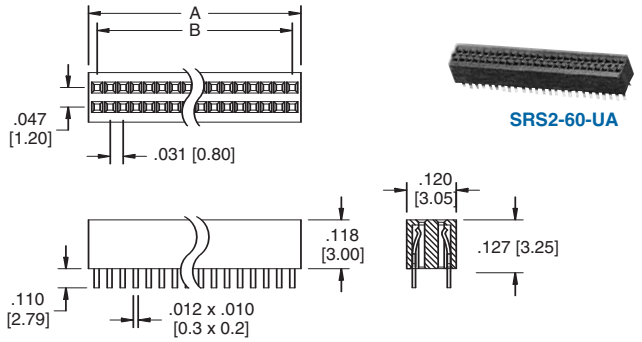

SRS2-60-UA

A = .031 [.80] X No of Positions Per Row
B = .031 [.80] X No of Spaces Per Row

0.8mm Female Header SRS2 Series

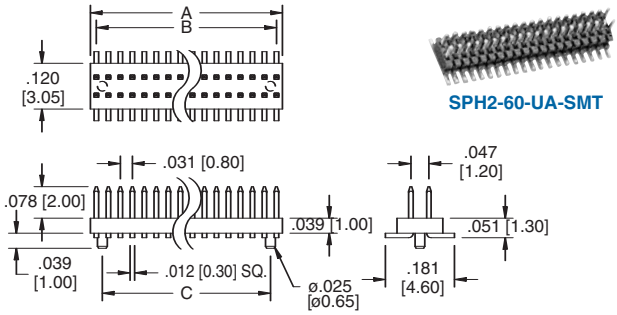

SPH2-60-UA-SMT

A = .031 [.80] X No of Positions Per Row
B = .031 [.80] X No of Spaces Per Row
C = .031 [.80] X No of Spaces - 1

0.8mm SMT Male Header SPH2 SMT Series

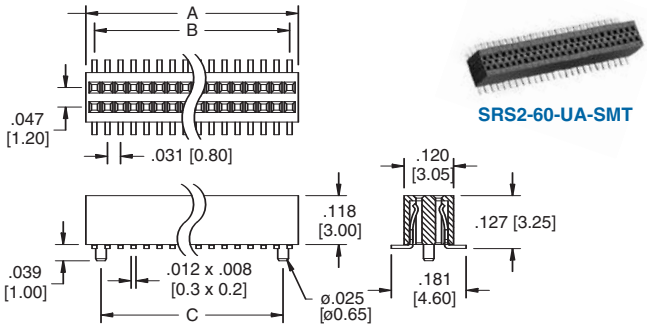

SRS2-60-UA-SMT

A = .031 [.80] X No of Positions Per Row
B = .031 [.80] X No of Spaces Per Row
C = .031 [.80] X No of Spaces - 1

0.8mm SMT Female Header SRS2 SMT Series

1.0mm MICRO HEADERS

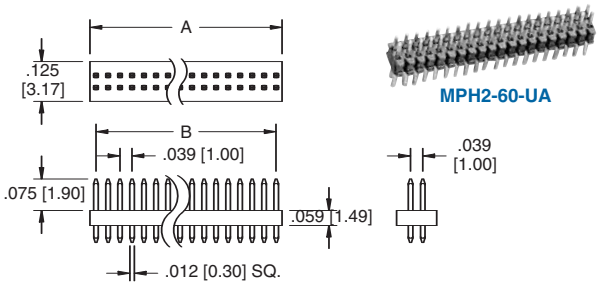

MPH2-60-UA

A = .039 [1.00] X No of Positions Per Row
B = .039 [1.00] X No of Spaces Per Row

1.0mm Male Header MPH2 Series

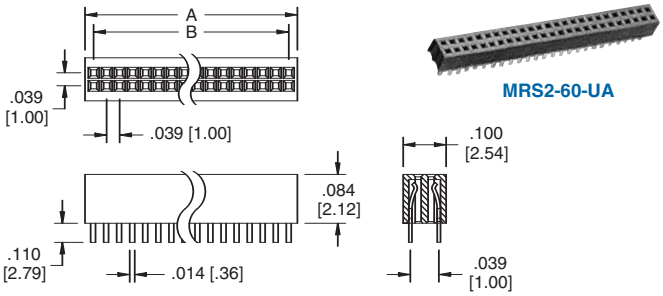

MRS2-60-UA

A = .039 [1.00] X No of Positions Per Row
B = .039 [1.00] X No of Spaces Per Row

1.0mm Female Header MRS2 Series

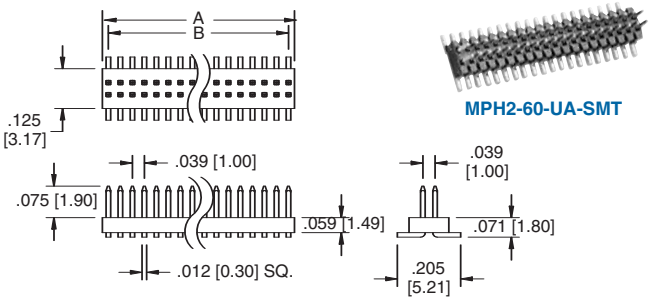

MPH2-60-UA-SMT

A = .039 [1.00] X No of Positions Per Row
B = .039 [1.00] X No of Spaces Per Row

1.0mm SMT Male Header MPH2-SMT Series

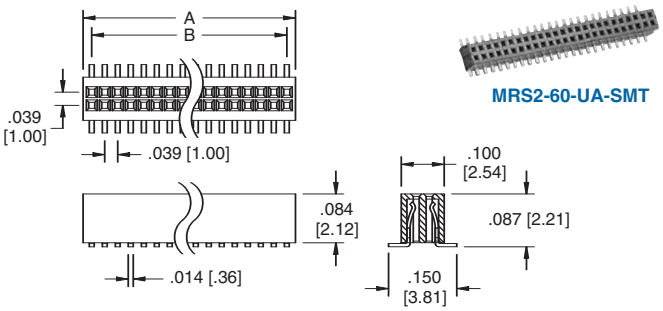

MRS2-60-UA-SMT

A = .039 [1.00] X No of Positions Per Row
B = .039 [1.00] X No of Spaces Per Row

1.0mm SMT Female Header MRS2-SMT Series