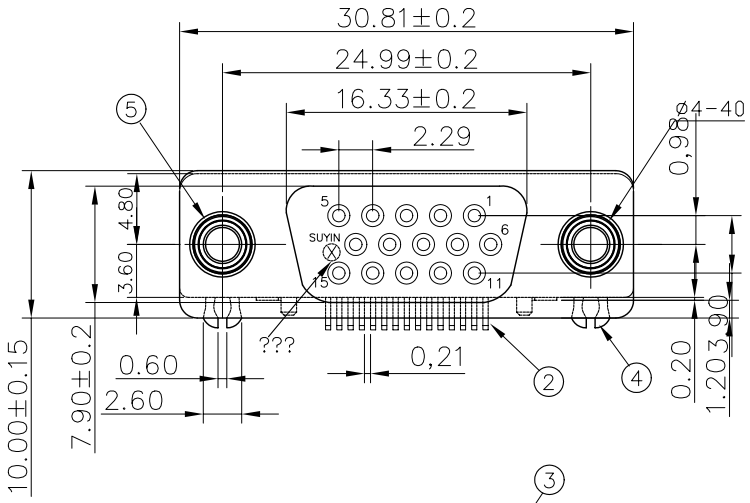

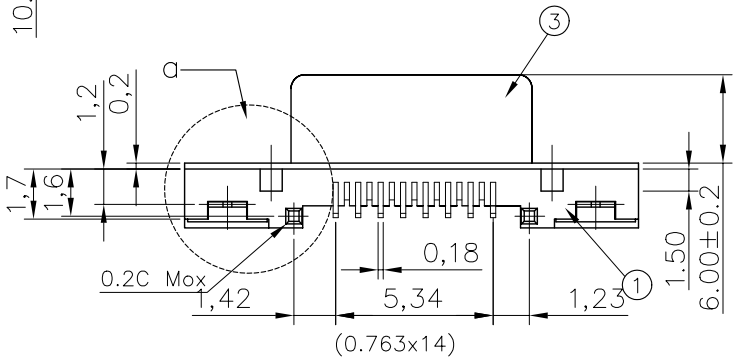

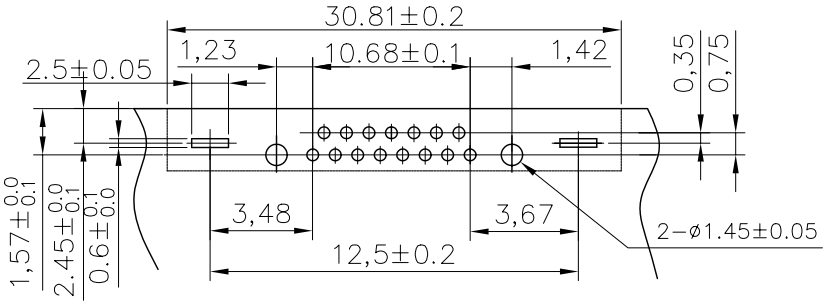

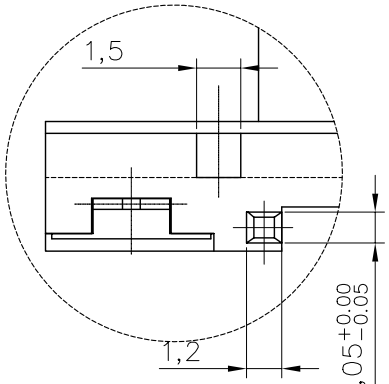

DETAIL"a"
SCALE(4:1)

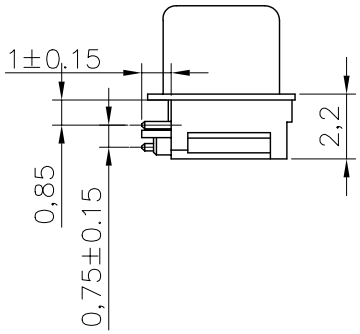

NOTE(I):

070922FR015□□01CY
1

1. Selective plating
   'S1,-05u" Min. gold in contact area/ 100u" Min. Tin in solder area.
   'S2,-Gold flash in contact area/ 100u" Min. Tin in solder area.
   'S3,-10u" Min. gold in contact area/ 100u" Min. Tin in solder area.
   'S4,-15u" Min. gold in contact area/ 100u" Min. Tin in solder area.
   'S5,-30u" Min. gold in contact area/ 100u" Min. Tin in solder area.
   'S6,-50u" Min. gold in contact area/ 100u" Min. Tin in solder area.

NO.	DESCRIPTION	MATERIAL	COLOR	REMARK
5	Rivet	Brass	——	Nickel plated
4	Fork	Brass	——	Tin plated
3	Shell	SPCC	——	Nickel plated
2	Terminal	Pho. Bronze	——	Gold/Tin plated
1	Plastics	High Temp Plastics	Blue	UL94V-0

SUYIN CONNECTOR

CUSTOMER COPY

TITLE: 15 PIN D-SUB CONNECTCR FEMALE R/A TYPE LOW PROFILE

ECN (DCN) NO.	REV	DATE	DESCRIPTION	CHANGE	APPRO.
	0		NEW	——	——

Angle	±2°
30 ~	±0.50
10 ~ 30	±0.30
~ 10	±0.15

GENERAL TOLERANCE UNLESS OTHERWISE NOTED

DRAW		
DESIGN		
CHECK		
APPRO.		

PART NO.	070922FR015SX01CY
PART NO. (OLD)	——
DRAWING NO.	D ING 070922FR015SX01CY
SCALE 2:1	UNIT mm A4

CH40426-76