# CD 29D HR Series

## 7000h at 85°C

- Small Size
- Long Useful Life
- High Ripple Current
- Industrial Power Supplies and Inverters

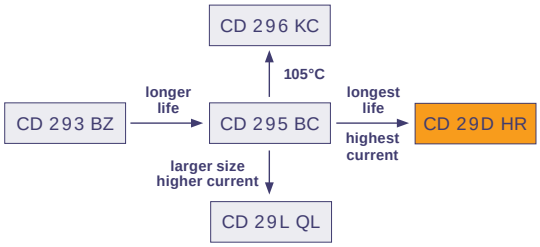

| Item | Characteristics |
|---|---|
| Operating Temperature Range (°C) | -40 ~ +85 |
| Voltage Range (V) | 160 ~ 450 |
| Capacitance Range (µF) | 47 ~ 2200 |
| Capacitance Tolerance (20°C, 120Hz) | ± 20% |
| Leakage Current (µA) | After 5 minutes at 20°C application of rated voltage, leakage current is not more than 0,01CV or 1,5mA, whichever is smaller<br>C: Nominal Capacitance (µF) V: Rated Voltage (V) |
| Dissipation Factor (20°C, 120Hz) | |
| Stability at Low Temperature (Impedance Ratio at 120Hz) | |

| Rated Voltage (V) | 160 | 200 | 250 | 350 | 400 | 450 |
|---|---|---|---|---|---|---|
| Tan δ (max) | 0,15 | | | | 0,12 | |

| Rated Voltage (V) | 160 ~ 450 |
|---|---|
| $Z_{-40°C} / Z_{+20°C}$ | 4 |

| | Useful Life | | Load Life | Endurance Test | Shelf Life |
|---|---|---|---|---|---|
| Lifetime | 7000h | >100000h | 5000h | 5000h | 1000h |
| Leakage Current | Not more than specified value | | Not more than specified value | Not more than specified value | Not more than specified value |
| Capacity Change | Within ± 30% of initial value | | Within ± 20% of initial value | Within ± 20% of initial value | Within ± 20% of initial value |
| Dissipation Factor | Not more than 300% of specified value | | Not more than 200% of specified value | Not more than 130% of specified value | Not more than 200% of specified value |
| Condition: | | | | | |
| Applied Voltage | $U_R$ | $U_R$ | $U_R$ | $U_R$ | $U_R = 0$ |
| Applied Current | $I_R$ | 1,2 x $I_R$ | $I_R$ | $I_R = 0$ | $I_R = 0$ |
| Applied Temperature | 85°C | 40°C | 85°C | 85°C | 85°C |
| Failure Rate Level | ≤ 1% Failure Rate | ≤ 1% Failure Rate | guaranteed | | |

After test: $U_R$ to be applied for 30min >24h before measurement

## Multiplier for Ripple Current

Frequency Coefficient

| Frequency | 50Hz | 120Hz | 1kHz | 10kHz | 100kHz |
|---|---|---|---|---|---|
| Coefficient | 0,87 | 1,00 | 1,20 | 1,35 | 1,40 |

Lifetime Diagram

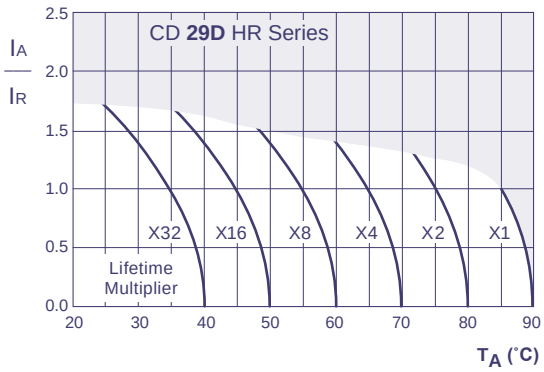


$I_A$ = actual ripple current at 120Hz, $I_R$ = rated ripple current at 120Hz, 85°C
Multiplier of Useful Life as a function of ambient temperature and ripple current load

Snap-In

## Ratings for CD **29D** HR Series

| $V_{DC}$ (Surge Voltage) Code | Rated Capa-citance | Max ESR 20°C, 120Hz | Typ ESR 20°C, 120Hz | Max Ripple Current 85°C, 120Hz | Size Ø D x L |
|---|---|---|---|---|---|
| (V) | (µF) | (mΩ) | (mΩ) | (Arms) | (mm) |
| 160 (200) 2C | 330 | 603 | 355 | 1,5 | 22 x 25 |
| | 390 | 511 | 300 | 1,6 | 25 x 25 |
| | 470 | 424 | 245 | 1,8 | 22 x 35 |
| | 560 | 356 | 215 | 2,1 | 22 x 35 |
| | | 356 | 215 | 2,2 | 25 x 30 |
| | | 356 | 215 | 2,1 | 30 x 25 |
| | 680 | 293 | 178 | 2,6 | 22 x 40 |
| | | 293 | 178 | 2,5 | 25 x 35 |
| | 820 | 243 | 145 | 2,8 | 22 x 50 |
| | | 243 | 145 | 2,7 | 25 x 40 |
| | | 243 | 145 | 2,9 | 30 x 30 |
| | | 243 | 145 | 2,8 | 35 x 25 |
| | 1000 | 199 | 115 | 3,3 | 25 x 45 |
| | | 199 | 115 | 3,4 | 30 x 35 |
| | | 199 | 115 | 3,3 | 35 x 30 |
| | 1200 | 166 | 95 | 3,7 | 25 x 50 |
| | | 166 | 95 | 3,8 | 30 x 40 |
| | | 166 | 95 | 3,6 | 35 x 35 |
| | 1500 | 133 | 75 | 4,4 | 30 x 45 |
| | | 133 | 75 | 4,3 | 35 x 40 |
| | 1800 | 111 | 70 | 4,4 | 35 x 45 |
| | 2200 | 91 | 58 | 5,9 | 35 x 50 |
| 200 (250) 2D | 220 | 905 | 375 | 1,2 | 22 x 25 |
| | 330 | 603 | 258 | 1,5 | 22 x 30 |
| | | 603 | 258 | 1,6 | 25 x 25 |
| | 390 | 511 | 221 | 1,8 | 22 x 35 |
| | | 511 | 221 | 1,8 | 25 x 30 |
| | 470 | 424 | 175 | 2,0 | 22 x 40 |
| | | 424 | 175 | 2,1 | 30 x 25 |
| | 560 | 356 | 150 | 2,2 | 22 x 45 |
| | | 356 | 150 | 2,2 | 25 x 35 |
| | | 356 | 150 | 2,3 | 30 x 30 |
| | | 356 | 150 | 2,2 | 35 x 25 |
| | 680 | 293 | 128 | 2,6 | 25 x 40 |
| | | 293 | 128 | 2,4 | 30 x 30 |
| | 820 | 243 | 105 | 2,7 | 25 x 50 |
| | | 243 | 105 | 2,8 | 30 x 40 |
| | | 243 | 105 | 2,6 | 35 x 30 |
| | 1000 | 199 | 80 | 3,4 | 30 x 40 |
| | | 199 | 80 | 3,6 | 35 x 35 |
| | 1200 | 166 | 70 | 3,8 | 30 x 50 |
| | | 166 | 70 | 3,7 | 35 x 40 |
| | 1500 | 133 | 55 | 4,7 | 35 x 50 |
| 250 (300) 2E | 150 | 1327 | 550 | 0,92 | 22 x 25 |
| | 180 | 1106 | 470 | 0,98 | 22 x 25 |
| | 220 | 905 | 370 | 1,25 | 22 x 30 |
| | | 905 | 370 | 1,25 | 25 x 25 |
| | 270 | 737 | 370 | 1,25 | 22 x 35 |
| | 330 | 603 | 250 | 1,64 | 22 x 40 |
| | | 603 | 250 | 1,64 | 25 x 30 |
| | | 603 | 250 | 1,64 | 30 x 25 |
| | 390 | 511 | 220 | 1,9 | 22 x 45 |
| | | 511 | 220 | 1,9 | 25 x 35 |
| | 470 | 424 | 175 | 2,2 | 22 x 50 |
| | | 424 | 175 | 2,2 | 25 x 40 |
| | | 424 | 175 | 2,2 | 30 x 30 |
| | | 424 | 175 | 2,2 | 35 x 25 |
| | 560 | 356 | 150 | 2,4 | 25 x 45 |
| | | 356 | 150 | 2,4 | 30 x 35 |
| | 680 | 293 | 123 | 2,8 | 30 x 40 |
| | | 293 | 123 | 2,8 | 35 x 30 |
| | 820 | 243 | 105 | 3,2 | 30 x 45 |
| | | 243 | 105 | 3,2 | 35 x 35 |
| | 1000 | 199 | 80 | 3,7 | 35 x 40 |
| | 1200 | 166 | 70 | 4,1 | 35 x 45 |
| | 1500 | 133 | 60 | 4,6 | 35 x 50 |

| $V_{DC}$ (Surge Voltage) Code | Rated Capa-citance | Max ESR 20°C, 120Hz | Typ ESR 20°C, 120Hz | Max Ripple Current 85°C, 120Hz | Size Ø D x L |
|---|---|---|---|---|---|
| (V) | (µF) | (mΩ) | (mΩ) | (Arms) | (mm) |
| 400 (450) 2G | 68 | 2341 | 960 | 0,62 | 22 x 25 |
| | 100 | 1592 | 660 | 0,81 | 22 x 30 |
| | | 1592 | 660 | 0,83 | 25 x 25 |
| | 120 | 1327 | 550 | 0,93 | 22 x 35 |
| | 150 | 1062 | 440 | 1,2 | 22 x 40 |
| | | 1062 | 440 | 1,2 | 25 x 30 |
| | | 1062 | 440 | 1,2 | 30 x 25 |
| | 180 | 885 | 360 | 1,3 | 22 x 45 |
| | | 885 | 360 | 1,3 | 25 x 35 |
| | | 885 | 360 | 1,3 | 30 x 30 |
| | | 885 | 360 | 1,3 | 35 x 25 |
| | 220 | 724 | 300 | 1,5 | 22 x 50 |
| | | 724 | 300 | 1,5 | 25 x 40 |
| | | 724 | 300 | 1,5 | 30 x 35 |
| | 270 | 590 | 240 | 1,7 | 25 x 45 |
| | | 590 | 240 | 1,7 | 30 x 40 |
| | | 590 | 240 | 1,7 | 35 x 30 |
| | 330 | 483 | 200 | 2,1 | 30 x 45 |
| | | 483 | 200 | 2,1 | 35 x 35 |
| | 390 | 409 | 170 | 2,3 | 30 x 50 |
| | | 409 | 170 | 2,3 | 35 x 40 |
| | 470 | 339 | 140 | 2,7 | 35 x 45 |
| | 560 | 285 | 110 | 3,0 | 35 x 50 |
| 450 (500) 2W | 47 | 3387 | 2800 | 0,52 | 22 x 25 |
| | 68 | 2341 | 1940 | 0,66 | 22 x 30 |
| | | 2341 | 1940 | 0,66 | 25 x 25 |
| | 100 | 1592 | 1310 | 0,9 | 22 x 35 |
| | | 1592 | 1310 | 0,9 | 25 x 30 |
| | | 1592 | 1310 | 0,9 | 30 x 25 |
| | 120 | 1327 | 910 | 1,1 | 22 x 40 |
| | | 1327 | 910 | 1,1 | 25 x 35 |
| | 150 | 1062 | 880 | 1,3 | 22 x 50 |
| | | 1062 | 880 | 1,3 | 25 x 40 |
| | | 1062 | 880 | 1,3 | 30 x 30 |
| | 180 | 885 | 740 | 1,4 | 25 x 45 |
| | | 885 | 740 | 1,4 | 30 x 35 |
| | | 885 | 740 | 1,4 | 35 x 25 |
| | 220 | 724 | 590 | 1,6 | 25 x 50 |
| | | 724 | 590 | 1,6 | 30 x 40 |
| | | 724 | 590 | 1,6 | 35 x 30 |
| | 270 | 590 | 490 | 1,9 | 30 x 45 |
| | | 590 | 490 | 1,9 | 35 x 35 |
| | 330 | 483 | 395 | 2,2 | 35 x 40 |
| | 390 | 409 | 300 | 2,4 | 35 x 45 |
| | 470 | 339 | 280 | 2,8 | 35 x 50 |

Snap-In

Custom products are available on request.

## Order Code SMD, Radial, Snap-In

| EC | R | 1C | PT | 101 | M | FF | 25 | 0611 | JExxxxx |
|---|---|---|---|---|---|---|---|---|---|
| Technology | Terminal Type | Rated Voltage Code | Series Code | Capacitance Code (in µF) | Capacitance Tolerance | Lead Form | Terminal/ Pitch Size | Dimension | for Specials only |
| EC = Electrolytic Capacitor | SMD = V | For coding please refer to the pages of ratings | CD VS = BS | 0,47 = R47 | ±20% = M | SMD: | | 4x7 = 0407 | |
| | Radial = R | | CD VH = VH | 1,0 = 010 | ±10% = K | Taped = FF | Terminal = T2 | 5x11,5 = 0511 | |
| PC = Polymer Capacitor | Snap-In = S | | CD VZ = VZ | 2,2 = 2R2 | +30 / -10% = Q | Radial: | | 6,3x11,5 = 0611 | |
| | | | CD 261 = LK | 100 = 101 | +50 / -10% = T | Long Lead = LL | 2,0mm = 20 | 35x80 = 3580 | |
| | | | CD 261X = QX | 1000 = 102 | | Cut 5,0mm = CB | 2,5mm = 25 | 45x100 = 45100 | |
| | | | CD 262 = QM | 10000 = 103 | | Cut 4,5mm = CC | 3,5mm = 35 | | |
| | | | CD 263 = BK | | | Cut 4,0mm = CD | 5,0mm = 50 | | |
| | | | CD 269 = PH | | | Cut 3,5mm = CE | 7,5mm = 75 | | |
| | | | CD 281 = LL | | | Cut 3,0mm = CF | 10,0mm = 10 | | |
| | | | CD 284 = XY | | | on request: alternative lead forms (axial, 90° - angle, others) | 12,5mm = 12 | | |
| | | | CD 287 = GC | | | | | | |
| | | | CD 28L = QL | | | Snap-In: | | | |
| | | | CD 293 = BZ | | | 4,0mm Pin Length = T4 | 2 Pin = P2 | | |
| | | | CD 294 = BW | | | 6,3mm Pin Length = T6 | 3 Pin = P3 | | |
| | | | CD 295 = BC | | | Soldering Pin = S4 | 4 Pin = P4 | | |
| | | | CD 296 = KC | | | | 5 Pin = P5 | | |
| | | | CD 297 = BB | | | | | | |
| | | | CD 299 = PG | | | | | | |
| | | | CD 29D = HR | | | | | | |
| | | | CD 29H = QH | | | | | | |
| | | | CD 29L = QL | | | | | | |
| | | | HCP = CP | | | | | | |
| | | | HPM = PM | | | | | | |
| | | | HVC = VC | | | | | | |

**preferred**

## Technical Specification SMD Type

### Dimensions

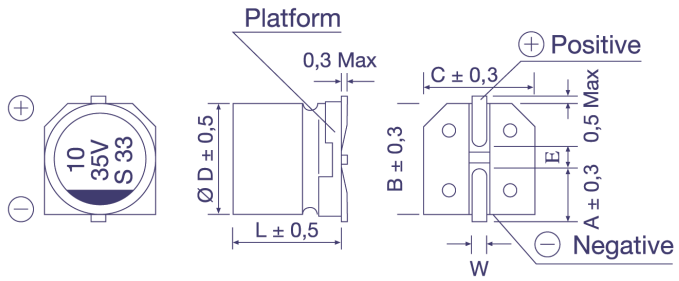


| Ø D x L | 4 x 5,4 | 5 x 5,4 | 6,3 x 5,4 | 6,3 x 7,7 | 8 x 10,5 | 8 x 11,8 | 10 x 10,5 | 10 x 12,7 |
|---|---|---|---|---|---|---|---|---|
| A | 1,8 | 2,1 | 2,4 | 2,5 | 2,9 | 2,9 | 3,2 | 3,2 |
| B | 4,3 | 5,3 | 6,6 | 6,6 | 8,3 | 8,4 | 10,3 | 10,4 |
| C | 4,3 | 5,3 | 6,6 | 6,6 | 8,3 | 8,4 | 10,3 | 10,4 |
| E | 1,0 | 1,3 | 2,2 | 2,2 | 3,1 | 3,1 | 4,5 | 4,5 |
| L | 5,4 | 5,4 | 5,4 | 7,7 | 10,5 | 11,8 | 10,5 | 12,7 |
| W | 0,5 - 0,8 | | | | 0,7 - 1,1 | | | |

in mm

### Taping Dimensions

Unit:mm

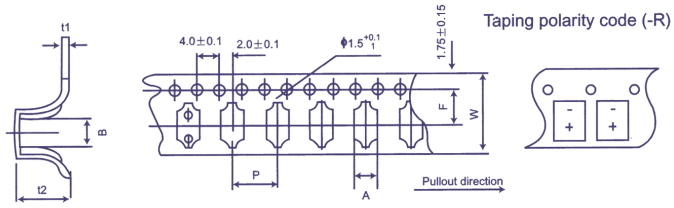


| Size (DxL) | w ± 0,3 | A ± 0,2 | B ± 0,2 | P ± 0,1 | t2 ± 0,2 | F ± 0,1 | t1 ± 0,1 |
|---|---|---|---|---|---|---|---|
| 4 x 5,4 | 12,0 | 5,0 | 5,0 | 8,0 | 5,8 | 5,5 | 0,4 |
| 5 x 5,4 | 12,0 | 6,0 | 6,0 | 12,0 | 5,8 | 5,5 | 0,4 |
| 6,3 x 5,4 | 16,0 | 7,0 | 7,0 | 12,0 | 5,8 | 7,5 | 0,4 |
| 6,3 x 7,7 | 16,0 | 7,0 | 7,0 | 12,0 | 8,4 | 7,5 | 0,4 |
| 8 x 10,5 | 24,0 | 8,7 | 8,7 | 16,0 | 11,0 | 11,5 | 0,5 |
| 8 x 11,8 | 24,0 | 8,7 | 8,7 | 16,0 | 12,3 | 11,5 | 0,5 |
| 10 x 10,5 | 24,0 | 10,7 | 10,7 | 16,0 | 11,0 | 11,5 | 0,5 |
| 10 x 12,7 | 24,0 | 10,7 | 10,7 | 16,0 | 14,0 | 11,5 | 0,5 |

in mm

### Soldering Profile (Aluminium Electrolytic Capacitors)

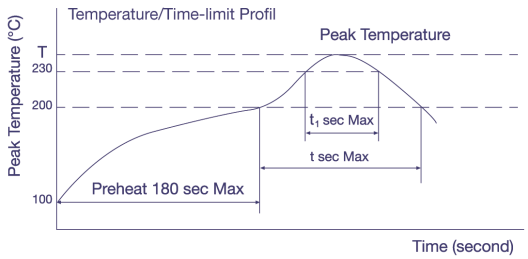


Allowable Range of Peak Temperature

| Size | T (°C) | t (second) | $t_1$ (second) |
|---|---|---|---|
| Ø 4 ~ 6,3 | 250 | 90 | 40 |
| Ø 8 x 10,5 | 240 | 90 | 30 |
| Ø 10 x 10,5 | 235 | 60 | 30 |

| Diameter | w | D |
|---|---|---|
| 4; 5 | 14 ± 1 | 50 ± 1 |
| 6,3 | 18 ± 1 | 50 ± 1 |
| 8; 10 | 25 ± 1 | 50 ± 1 |
| Polymer | 25 ± 1 | 80 ± 1 |

in mm

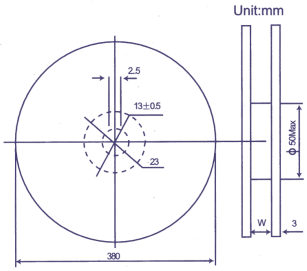


For more details or Soldering Profiles of Radials or Polymer-Capacitors please contact our local Sales Offices.

## Technical Specification Snap-In Type

**Pin Type: Snap-In**
Order Code: T6, T4

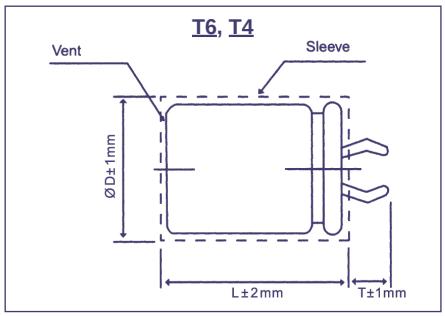


| Terminal | T6 | T4 |
|---|---|---|
| Pin Length T | 6,3 | 4,0 |

**Pin Type: Soldering**
Order Code: S4

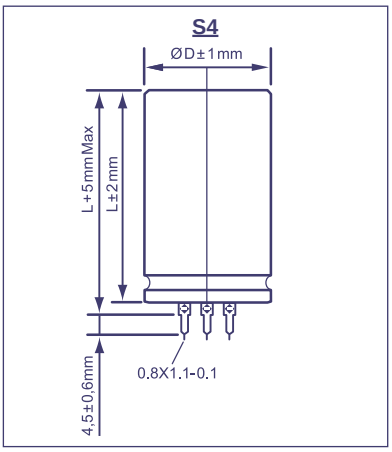


**Snap-In Terminal**
Order Code: P2, P3, P4

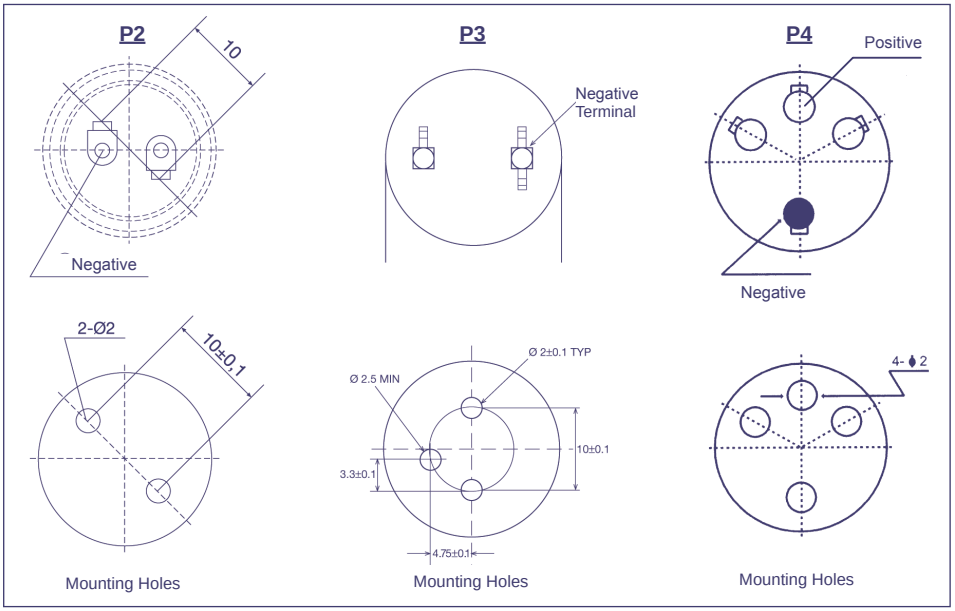


*P3 only T4 Terminal*

**Soldering Terminal**
Order Code: P5

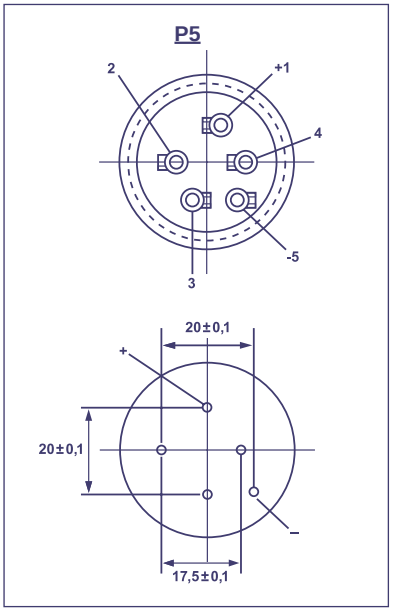


## Order Code Screw Type

| EC | G | 1C | BP | 101 | M | B | E | 160 | A361 | JExxxxx |
|---|---|---|---|---|---|---|---|---|---|---|
| Technology | Terminal Type | Rated Voltage Code | Series Code | Capacitance Code | Capacitance Tolerance | Mounting | Diameter | Length | For Terminal Code see tables below | for Specials only |
| EC = Electrolytic Capacitor | Screw = G | For coding please refer to the pages of ratings | CD 135 = BP | 100 = 101 | ±20% = M | Bolt = B | 36 = A | 53 = 053 | | |
| | | | CD 136 = PK | 1000 = 102 | ±10% = K | No double sleeve = N | 40 = B | 65 = 065 | | |
| | | | CD 137 = PX | 10000 = 103 | +30 / -10% = Q | 2 stoppers bracket + double sleeve* = I | 51 = C | 96 = 096 | | |
| | | | CD 138 = PC | | +20 / -0% = R | 3 stoppers bracket + double sleeve* = Y | 64 = D | 100 = 100 | | |
| | | | CD 139 = BL | | +50 / -10% = T | No bracket, but double sleeve* = D | 77 = E | 115 = 115 | | |
| | | | | | **preferred** | * Double sleeve for diameter ≥ 51 only | 90 = F | 236 = 236 | | |
| | | | | | | | 101 = G | | | |

## Technical Specification Screw Type

### Dimensions

**Standard Housing**
Order Code: I, Y, D, N

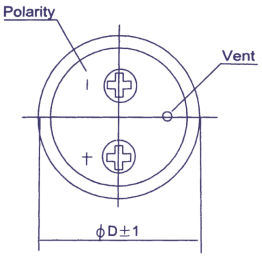


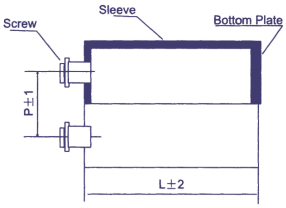


**Bolt Housing**
Order Code: B

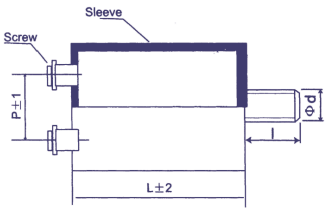


| Ø D | Ø d | l |
|---|---|---|
| Ø 36 | M8 | 12 |
| ≥ Ø 51 | M12 | 16 |

in mm