Dialight

Surface Mount LED Selector Guide

Prism® CBI® LED Circuit Board Indicators
Micro LED® Surface Mount LEDs

RoHS COMPLIANT

Dialight

40 Years of LED Experience

Prism® CBI®

Dialight's Prism indicators are the industry's only SMD indicator series designed to survive 260°C peak reflow temperature AND provide the aesthetic appeal of a diffused lens for enhanced viewing. Ideal for limited-space applications and board-edge mounting, the Prism Series is available in a variety of package sizes including single level, bi-level, and tri-level configuration and in 2mm and 3mm lens size. The integral light pipes used in Prism are engineered for maximum light transmission and minimal light bleed while the diffused lens is also ideal for bi-color and tri-color applications where color-mixing is desired.

Micro LED® SMD LED

Dialight's Micro LED Surface Mount LED product line provides one of the industry's widest range of discrete LEDs. Packaged in ChipLED, PLCC, right-angle and reverse-mount configurations, Dialight offers a full range off colors and intensities, including the latest AlInGaP and InGaN technology. With such a wide variety of mounting styles, colors, intensities, viewing angles and lens features, Micro LED series is sure to include a cost-effective solution to any application.

Contact your Authorized Dialight Distributor or local Sales Representative for more information or samples. http://www.dialight.com/WhereToBuy/Status-Indication

Index

02 Product Overview

Prism® CBI®
03 591 Series
04 592 Series
05 593 Series
06 595 Series

Micro LED® SMD LED
07 Micro LED® SMD LED
09 PLCC
Reverse Mount
Right Angle
10 Right Angle

Drawings
11 Micro LED® SMD
12 Micro LED® SMD
Right Angle
13 Reverse Mount
PLCC
591Series pad layouts

New Products
14 Low Current LEDs

Features and Benefits

Prism® CBI®

- Compatible with automatic pick-and-place equipment for reduced installation costs
- RoHS Compliant
- Available with 2mA low current LED
- Eliminates wave soldering process
- Black, low-profile PPA housing enhances the contrast ratio for better clarity

Micro LED® SMD LED

- Can be used with Dialight's wide-range of Optopipe® series light pipes.
- Package sizes include 0603, 0606, 0805, 1206, 1208,1210,1616
- Compatible with infrared reflow processes and JEDEC standards
- Helps to eliminate mixed technology pc board processing
- RoHS compliant
- Available in 2mA low current versions

Typical Applications

- Data center Infrastructure
  - Servers - Rack mount; blade; tower
  - Storage – High-performance storage subsystems for high- end enterprise
- Networking Equipment for enterprise data centers and telecom communication centers
  - Switches, routers, and network control equipment interconnected using fiber optic and high speed wiring
- Storage Networking Hardware
  - Fiber channel host bus adapter cards (HBAs); converged network adapter cards (CNAs); \ISCSi adapter cards; InfiniBand adapter cards
- Next-Gen Wireless
  - Wireless Infrastructure
- Electronic Test & Measurement Instruments
- Communications Testing Equipment
- Process controls
- Automation
- Medical
- Handheld devices
- Battery powered applications (2mA version)

The following pages are organized as a product overview. Additional information is available at www.dialight.com including detailed specs and schematics, 3D models, and operating characteristics. The most recent version of this selector guide can be found at: http://www.dialight.com/Assets/Brochures_And_Catalogs/Indication/SMT_Selector_Guide.pdf

591 Series Prism® CBI®

Single Level Surface Mount LED

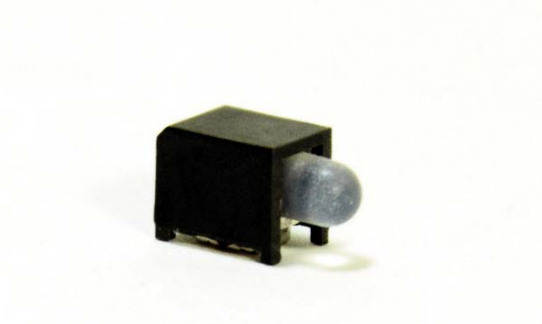

Specifications[1]

Round Lens

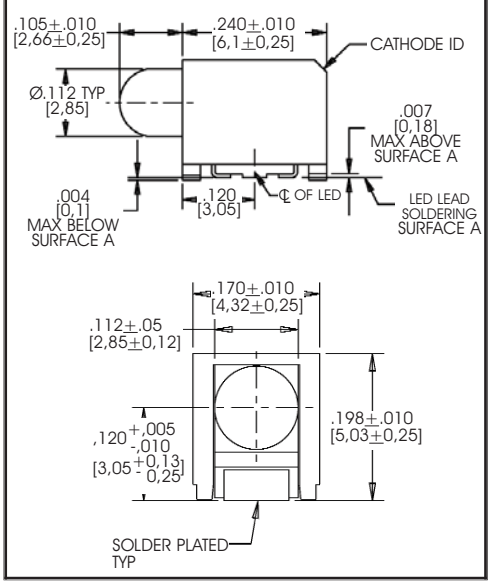

Square Lens

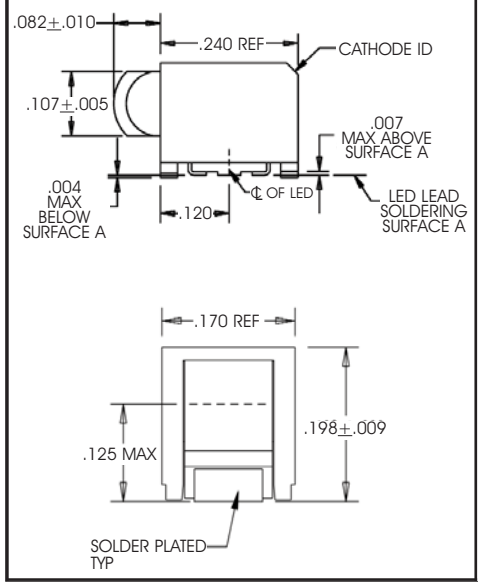

Extended Lens

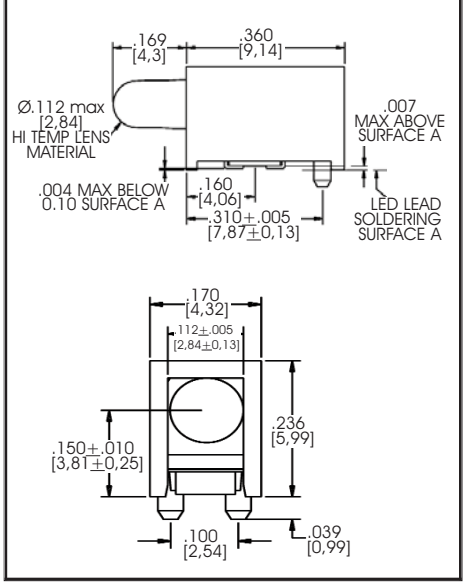

[1]For pad layout please see page 13

Order Code

5 9 1 - X X 0 X - X X X F

- Color
- Lens Type
- RoHS Compliant
- Current
- Package Options

Current	
Current Code	Current Type
1	Standard
4	Low Current[2]

[2]Detail on page 14

Lens Type	
Lens Code	Lens Type
0	Round
1	Square
2	Extended

Packaging Type	
Packaging Code	Packaging
02	20 piece strip
07	7" Reel
13	13" Reel

Color Field				Operating Characteristics			
Color Code	Color	Material	Feature	Test Condition	Vf Typ (Volts)	Typ Luminous Intensity (mcd)	Typ Dom Wavelength (nm)
20*	Red	GaAsP/GaP	Hi. Efficiency	If = 10mA	2.0	5.0	628
21	Red	AlGaAs	-----	If = 10mA	1.8	23.9	645
22	Green	AlGaP	Hi. Intensity	If = 10mA	2.1	9.1	570
23*	Green	GaP	-----	If = 10mA	2.0	4.0	570
24*	Yellow	GaAsP/GaP	-----	If = 10mA	2.0	5.0	587
25*	Orange	GaAsP	-----	If = 10mA	2.0	13.7	606
26	Blue	InGaN	-----	If = 20mA	3.5	6.0	465
27	Yellow	AlInGaP	-----	If = 10mA	2.0	33.6	587
28	White	InGaN	-----	If = 20mA	3.5	19.0	x .33 y .33
30	R/G	GaAsP	-----	If = 10mA	2.0/2.0	6.5/8.0	628/570
31	Y/G	GaAsP/GaP	-----	If = 10mA	2.0/2.0	6.5/8.0	586/570
32	R/Y	AlGaP/AlGaP	-----	If = 10mA	2.0/2.0	6.5/6.5	528/586
34	R/B	AlInGaP/GaN	-----	If = 20mA	1.9/3.9	30/5	626/470
35	R/G/B	AlInGaP/InGaN	-----	If = 20mA	2.6/4.5/2.6	10/5/16	645/466/570
36	O/G	GaAsP/GaP	-----	If = 10mA	2.0/2.0	5.5/8.5	606/570

*Low current version only available in marked colors (*). See page 14 for details.

592 Series Prism® CBI®

Bi-Level Surface Mount LED

Specifications

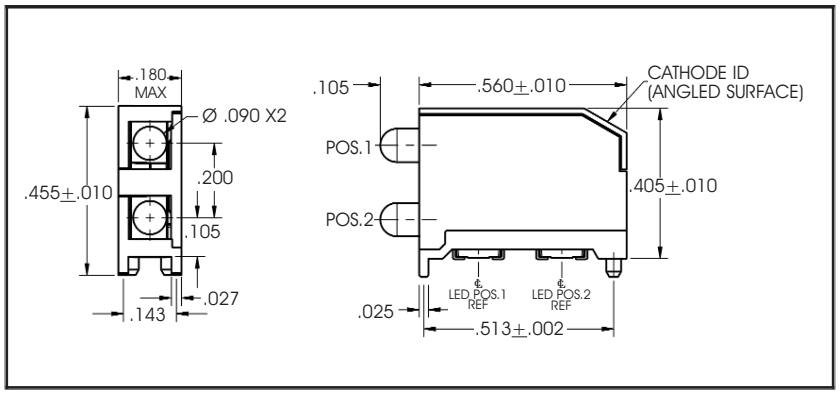

Single Color

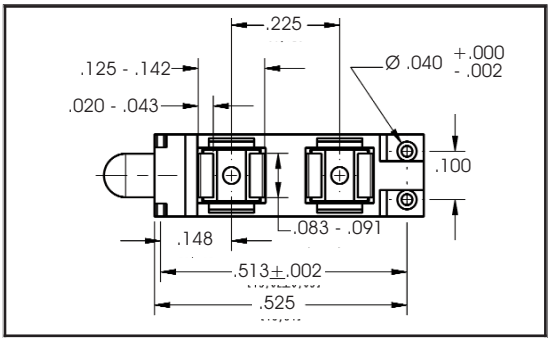

Multi-Color

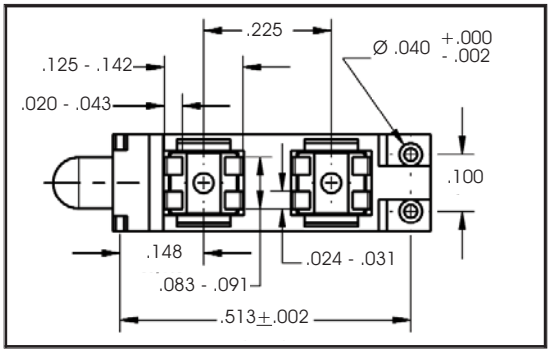

Order Code

5 9 2 - X X X X - 3 X X F

- Color Pos. 1
- Color Pos. 2
- RoHS Compliant
- Package Options

Packaging Type	
Packaging Code	Packaging
02	10 piece strip
13	13" Reel

Color Field				Operating Characteristics			
Color Code	Color	Material	Feature	Test Condition	Vf Typ (Volts)	Typ Luminous Intensity (mcd)	Typ Dom Wavelength (nm)
20	Red	GaAsP/GaP	Hi. Efficiency	If = 10mA	2.0	3	628
21	Red	AlGaAs	-----	If = 10mA	1.8	9	645
22	Green	AlGaP	Hi. Intensity	If = 10mA	2.0	6	570
23	Green	GaP	-----	If = 10mA	2.0	4	570
24	Yellow	GaAsP/GaP	-----	If = 10mA	2.0	2	587
25	Orange	GaAsP	-----	If = 10mA	2.0	2	606
26	Blue	InGaN	-----	If = 10mA	3.5	6	465
27	Yellow	AlInGaP	-----	If = 20mA	2.0	60	587
28	White	InGaN	-----	If = 10mA	3.1	34	x .33 y .33
29	Green	InGaN	-----	If = 20mA	3.7	56	525
30	R/G	GaAsP	-----	If = 10mA	2.0/2.0	3/4	628/570
31	Y/G	GaAsP/GaP	-----	If = 10mA	2.0/2.0	2/3	590/570
32	R/Y	AlGaP/AlGaP	-----	If = 20mA	2.0/2.0	21/34	633/587
34	R/B	AlInGaP/InGaN	-----	If = 10mA	1.9/3.0	21/24	625/467
35	R/G/B	AlInGaP/InGaN	-----	If = 20mA	1.9/3.4/3.4	31/84/16	626/525/470
36	O/G	GaAsP/GaP	-----	If = 10mA	2.0/2.0	3/4	606/570

Pad Layouts

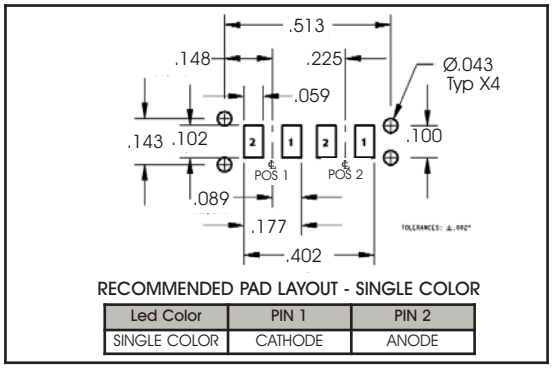

RECOMMENDED PAD LAYOUT - SINGLE COLOR

Led Color	PIN 1	PIN 2
SINGLE COLOR	CATHODE	ANODE

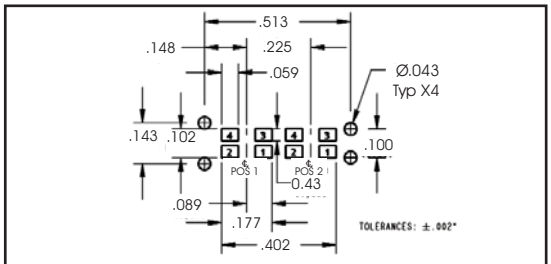

RECOMMENDED PAD LAYOUT - MULTI-COLOR

Led Color	PIN 1	PIN 2	PIN 3	PIN 4
Red / Yellow	Red CATHODE	Red ANODE	Yellow ANODE	Yellow CATHODE
Green / Yellow	Yellow CATHODE	Yellow ANODE	Green ANODE	Green CATHODE
Red / Green	Red CATHODE	Red ANODE	Green ANODE	Green CATHODE
Orange / Green	Orange CATHODE	Orange ANODE	Green ANODE	Green CATHODE
R / G / B Tri-Color	Red CATHODE	COMMON ANODE	Green CATHODE	BLUE CATHODE

593 Series Prism® CBI®

Tri-Level Surface Mount LED

Specifications

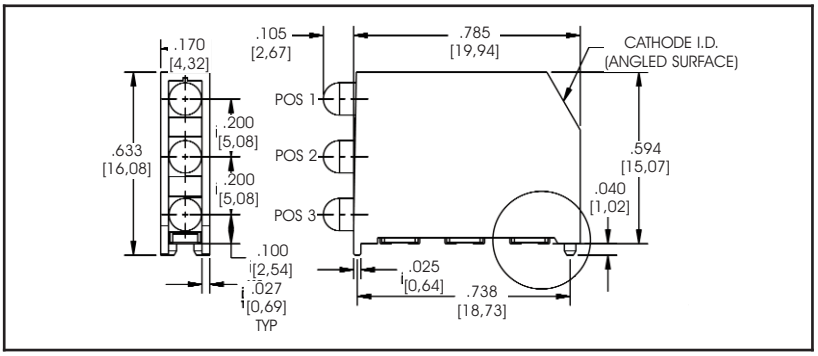

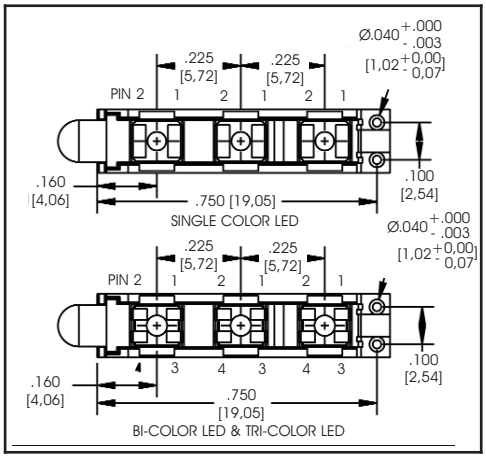

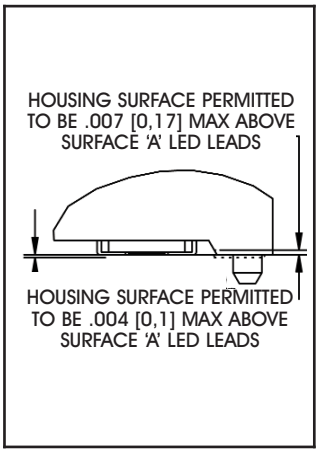

Pad Layouts

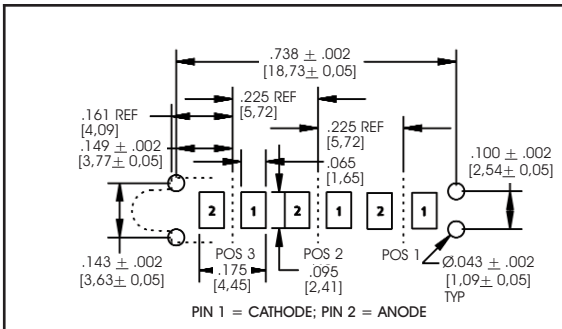

RECOMMENDED PAD LAYOUT - SINGLE COLOR

Packaging Type	
Packaging Code	Packaging
02	5 piece strip
13	13" Reel

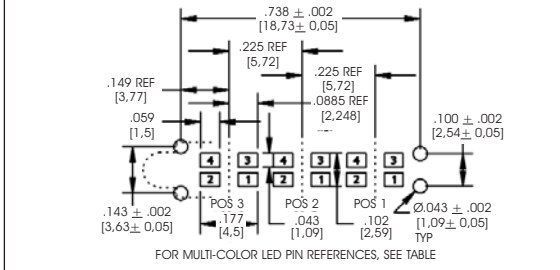

RECOMMENDED PAD LAYOUT - SINGLE COLOR

MULTI-COLOR LED PIN REFERENCES				
Led Color	PIN 1	PIN 2	PIN 3	PIN 4
R/Y BI-COLOR	RED CATHODE	RED ANODE	YELLOW ANODE	YELLOW CATHODE
Y/G BI-COLOR	YELLOW CATHODE	YELLOW ANODE	GREEN ANODE	GREEN CATHODE
R/G BI-COLOR	RED CATHODE	RED ANODE	GREEN ANODE	GREEN CATHODE
R/G/B BI-COLOR	RED CATHODE	COMMON ANODE	GREEN CATHODE	BLUE CATHODE

Order Code

5 9 3 - X X X X X X - 0 X X F

- Color Pos. 1
- Color Pos. 2
- Color Pos. 3
- Package Options
- RoHS Compliant

Color Field				Operating Characteristics			
Color Code	Color	Material	Feature	Test Condition	Vf Typ (Volts)	Typ Luminous Intensity (mcd) If = 20mA	Typ Dom Wavelength (nm)
20	Red	AlInGaP	Hi. Efficiency	If = 10mA	2.0	6.0	628
21	Red	AlGaAs	-----	If = 10mA	1.75	29.0	645
22	Green	AlInGaP	Hi. Intensity	If = 10mA	2.0	16.0	570
23	Green	AlInGaP	-----	If = 10mA	2.0	11.0	570
24	Yellow	GaAsP/GaP	-----	If = 10mA	2.0	11.0	587
26	Blue	InGaN	-----	If = 10mA	3.5	7.0	465
27	Yellow	AlInGaP	-----	If = 10mA	2.0	80.0	587
28	White	InGaN	-----	If = 10mA	3.1	85.0	x .33 y .33
29	Green	InGaN	-----	If = 20mA	3.4	150.0	525
30	R/G	GaAsP	-----	If = 10mA	2.0/2.0	7/10	628/570
31	Y/G	GaAsP/GaP	-----	If = 10mA	2.0/2.0	6/10	590/570
32	R/Y	AlGaP/AlGaP	-----	If = 20mA	2.0/2.0	45/70	633/587
35	R/G/B	AlInGaP/InGaN	-----	If = 20mA	1.9/3.4/3.4	35/70/20	626/525/470

595 Series

2mm Single Level Prism® CBI®

Specifications

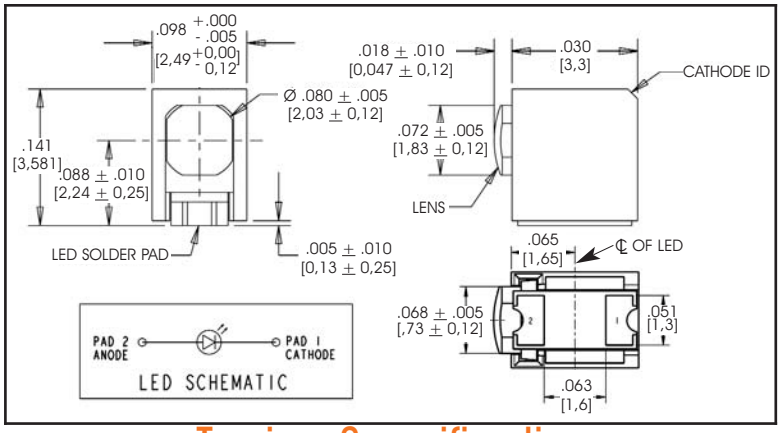

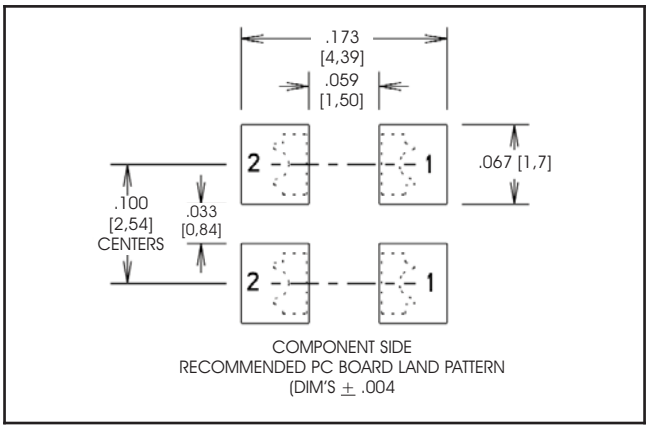

Taping Specification

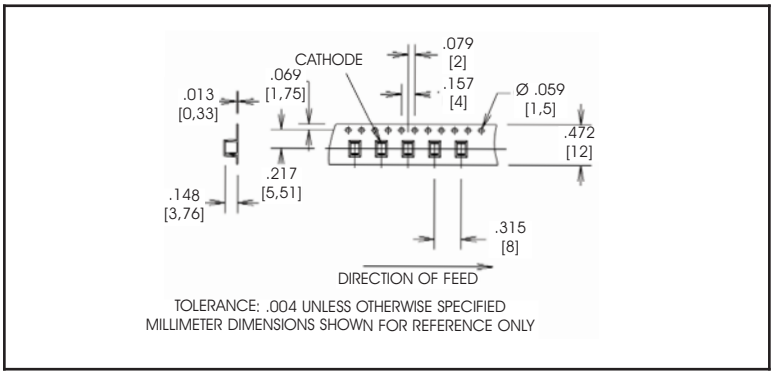

Order Code

595-XXXX-0XX F

- XXXX: Color Code
- 0XX: Package Options
- F: RoHS Compliant

Color Field				Operating Characteristics			
Color Code	Color	Material	Feature	Test Condition	Vf Typ (Volts)	Typ Luminous Intensity (mcd)	Typ Dom Wavelength (nm)
2101	Red	AlGaAs	-----	20 mA	1.7	25.0	647
2201	Green	AlInGaP	Hi. Intensity	20 mA	2.1	70.0	572
2301	Green	AlInGaP	-----	20 mA	2.1	11.0	572
2401	Yellow	AlInGaP	-----	20 mA	2.2	9.0	586
2501	Orange	AlInGaP	-----	20 mA	2.2	9.0	606
2602	Blue	InGaN	-----	20 mA	3.3	80.0*	470
2701	Yellow	AlInGaP	-----	20 mA	2.0	41.0*	590
2902	Green	InGaN	-----	20 mA	3.3	300.0*	525

*Test condition = 10mA

Packaging Type	
Packaging Code	Packaging
02	20 piece strip
07	7" Reel
13	13" Reel

Micro LED® SMD LED

ChipLED	Dialight Part Number	Color	Material	Dom .λ Typ. (nm)	Intensity Typ. (mcd)	Forward Voltage Typ. (V)	Viewing Angle	Height	Test Current (mA)	Fig	Type
0603 Series Package (1.6mm X 0.8mm X Height)											
	597-3326-607F	Green	InGaN	525	150	3.4	130	0.8	20	1	Single Color
	597-3607-607F	Blue	InGaN	470	60	3.3	130	0.8	20	1	Single Color
	597-5004-407F	Red	AlInGaP	626	50	1.9	152	0.7	20	1	Single Color
	597-5112-407F	Red	AlGaAs	647	11.7	1.7	152	0.7	20	1	Single Color
	597-5203-407F	Orange	GaAsP	606	3.4	2.2	152	0.7	20	1	Single Color
	597-5213-407F	Orange	AlInGaP	605	65	1.9	152	0.7	20	1	Single Color
	597-5223-407F	Yellow	AlInGaP	590	65	1.9	152	0.7	20	1	Single Color
	597-5312-407F	Green	GaP	567	6.4	2.1	152	0.7	20	1	Single Color
	597-5412-407F	Yellow-Green	GaP	572	11.7	2.1	152	0.7	20	1	Single Color
	598-8010-107F	Red	AlInGaP	635	40	2.2	140	0.7	20	2	Single Color
	598-8020-107F	Red-Orange	AlInGaP	625	150	2	140	0.7	20	2	Single Color
	598-8030-107F	Orange	AlInGaP	605	80	2	140	0.7	20	2	Single Color
	598-8040-107F	Yellow	AlInGaP	593	130	2	140	0.7	20	2	Single Color
	598-8050-107F	Yellow	AlInGaP	587	130	2	140	0.7	20	2	Single Color
	598-8060-107F	Yellow-Green	AlInGaP	573	40	2	140	0.7	20	2	Single Color
	598-8070-107F	Green	GaP	566	20	3.2	140	0.7	20	2	Single Color
	598-8081-107F	Green	InGan	523	300	3.2	140	0.7	20	2	Single Color
	598-8091-107F	Blue	InGan	473	90	3.2	140	0.7	20	2	Single Color
0606 Series Package (1.6mm X 1.6mm X Height)											
	598-8410-207F	Red / Green	AlInGaP	635 / 565	60 / 40	2 / 2	140	0.7	20	3	Bi-Color
	598-8430-207F	Orange / Green	AlInGaP	605 / 568	100 / 40	2 / 2	140	0.7	20	3	Bi-Color
	598-8440-207F	Yellow / Green	AlInGaP	590 / 570	135 / 50	2 / 2	140	0.7	20	3	Bi-Color
	598-8450-207F	Yellow / Green	AlInGaP / InGaN	592 / 530	120 / 120	2 / 3.2	140	0.7	20	3	Bi-Color
	598-8460-207F	Yellow / Red	AlInGaP	590 / 640	135 / 50	2 / 2.2	140	0.7	20	3	Bi-Color
	598-8710-307F	Red / Green / Blue	AlInGaP / InGaN / InGaN	635 / 525 / 470	60 / 120 / 90	2 / 3.2 / 3.2	140	0.7	20	4	Tri-Color
	598-8720-307F	Red-Orange / Green / Blue	AlInGaP / InGaN / InGaN	625 / 525 / 470	120 / 150 / 60	2 / 3.2 / 3.2	140	0.7	20	4	Tri-Color
	598-8740-307F	Yellow / Green / Blue	AlInGaP / InGaN / InGaN	590 / 525 / 475	110 / 220 / 90	2 / 3.2 / 3.2	140	0.7	20	4	Tri-Color
0805 Series Package (2.0mm X 1.25mm X Height)											
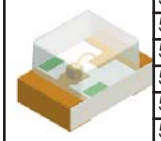	597-3003-407F	Red	AlInGaP	626	50	1.9	150	0.8	20	5	Single Color
	597-3006-607F	Red	GaP	630	6	2.0	130	1.1	10	5	Single Color
	597-3212-407F	Orange	AlInGaP	605	65	1.9	150	0.8	20	5	Single Color
	597-3222-407F	Amber	AlInGaP	590	65	1.9	150	0.8	20	5	Single Color
	597-3305-607F	Green	GaP	569	8	2.1	130	1.1	10	5	Single Color
	597-3405-607F	Yellow	GaP	588	6	2.1	130	1.1	10	5	Single Color
	597-5111-407F	Red	AlGaAs	647	11.7	1.7	150	0.8	20	5	Single Color
	597-5202-407F	Orange	GaP	606	3.7	2.2	150	0.8	20	5	Single Color
	597-5311-407F	Green	GaP	567	6.4	2.1	150	0.8	20	5	Single Color
	597-5411-407F	Yellow	GaP	572	11.7	2.1	150	0.8	20	5	Single Color
	598-8110-107F	Red	AlInGaP	635	40	2.2	140	0.7	20	6	Single Color
	598-8120-107F	Red-Orange	AlInGaP	625	150	2	140	0.7	20	6	Single Color
	598-8130-107F	Orange	AlInGaP	605	80	2	140	0.7	20	6	Single Color
	598-8140-107F	Yellow	AlInGaP	593	130	2	140	0.7	20	6	Single Color
	598-8150-107F	Yellow	AlInGaP	587	130	2	140	0.7	20	6	Single Color
	598-8160-107F	Yellow-Green	AlInGaP	573	40	2	140	0.7	20	6	Single Color
	598-8170-107F	Green	GaP	566	20	3.2	140	0.7	20	6	Single Color
	598-8181-107F	Green	InGan	523	300	3.2	140	0.7	20	6	Single Color
	598-8191-107F	Blue	InGan	473	90	3.2	140	0.7	20	6	Single Color
1206 Series Package (3.2mm X 1.6mm X Height)											
	597-3007-607F	Red	GaP	621	8	2.0	130	1.1	20	7	Single Color
	597-3302-607F	Green	GaP	569	8	2.1	130	1.1	10	7	Single Color
	597-3403-607F	Yellow	GaAsP	588	6	2.1	130	1.1	10	7	Single Color
	598-8210-107F	Red	AlInGaP	635	40	2.2	140	0.7	20	8	Single Color
	598-8220-107F	Red-Orange	AlInGaP	625	150	2	140	0.7	20	8	Single Color
	598-8230-107F	Orange	AlInGaP	605	80	2	140	0.7	20	8	Single Color
	598-8240-107F	Yellow	AlInGaP	593	130	2	140	0.7	20	8	Single Color
	598-8250-107F	Yellow	AlInGaP	587	130	2	140	0.7	20	8	Single Color
	598-8260-107F	Yellow-Green	AlInGaP	573	40	2	140	0.7	20	8	Single Color
	598-8270-107F	Green	GaP	566	20	3.2	140	0.7	20	8	Single Color
	598-8281-107F	Green	InGan	523	300	3.2	140	0.7	20	8	Single Color
	598-8291-107F	Blue	InGan	473	90	3.2	140	0.7	20	8	Single Color

Micro LED® SMD LED (cont.)

ChipLED	Dialight Part Number	Color	Material	Dom .λ Typ. (nm)	Intensity Typ. (mcd)	Forward Voltage Typ. (V)	Viewing Angle	Height	Test Current (mA)	Fig	Type
1206 Series Package with Lens (3.0mm X 1.6mm X Height)											
	597-3612-407F	Blue	InGaN	470	133	3.3	50	1.5	20	9	Single Color
	597-3311-407F	Green	GaP	567	12	2.1	70	1.5	20	9	Single Color
	597-3312-407F	Green	AlInGaP	561	42	2.1	60	1.5	20	9	Single Color
	597-3325-407F	Green	InGaN	525	415	3.3	50	1.5	20	9	Single Color
	597-3111-407F	Red	GaAlAs	647	33.6	1.7	70	1.5	20	9	Single Color
	597-3021-407F	Red	AlInGaP	626	240	1.9	60	1.5	20	9	Single Color
	597-3202-407F	Orange	AlInGaP	605	240	1.9	60	1.5	20	9	Single Color
	597-3201-407F	Orange	GaAsP/GaP	606	9	2.2	70	1.5	20	9	Single Color
	597-3401-407F	Yellow	GaAsP	590	6	2.2	70	1.5	20	9	Single Color
1208 Series Package with Reflector (3.0mm X 3.0mm X Height)											
	597-3002-507F	Red	AlInGaP	630	63	2.2	110	1.3	20	10	Single Color
	597-3021-507F	Red	GaAsP	653	6.3	2.0	110	1.3	20	10	Single Color
	597-3032-507F	Red	AlInGaP	620	100	2.2	110	1.3	20	10	Single Color
	597-3111-507F	Red	AlGaAs	662	16	1.75	110	1.3	20	10	Single Color
	597-3202-507F	Orange	AlInGaP	605	160	2.2	110	1.3	20	10	Single Color
	597-3211-507F	Orange	GaAsP	612	10	2.0	110	1.3	20	10	Single Color
	597-3301-507F	Green	AlInGaP	573	25	2.2	110	1.3	20	10	Single Color
	597-3312-507F	Green	AlInGaP	560	18	2.1	110	1.3	20	10	Single Color
	597-3322-507F	Green	InGaN	525	140	3.2	110	1.3	20	10	Single Color
	597-3401-507F	Yellow	GaAsP	588	6.3	2.1	110	1.3	20	10	Single Color
	597-3402-507F	Yellow	AlInGaP	590	160	2.2	110	1.3	20	10	Single Color
	597-3502-507F	Yellow-Green	AlInGaP	572	25	2.2	110	1.3	20	10	Single Color
	597-3602-507F	Blue	InGaN	470	100	3.3	110	1.3	20	10	Single Color
	597-3902-507F	White	InGaN	x: 0.3 y: 0.3	900	3.2	110	1.3	20	10	Single Color
1210 Series Package (3.2mm X 2.7mm X Height)											
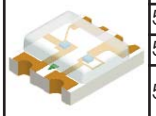	597-7702-607F	Red/Green	GaAsP/GaP	621/569	12/15	2.0/2.1	130	1.1	20	11	Bi-Color
	597-7722-607F	Yellow/Green	GaP/GaAsp	588/569	9/15	2.1/2.1	130	1.1	20	11	Bi-Color
	598-8610-207F	Red / Green	AlInGaP	635 / 565	60 / 40	2 / 2	140	0.7	20	12	Bi-Color
	598-8621-207F	Red-Orange / Green	AlInGaP / InGaN	625 / 525	100 / 220	2 / 3.2	140	0.7	20	12	Bi-Color
	598-8631-207F	Red-Orange / Green	AlInGaP	625 / 568	110 /40	2 / 2	140	0.7	20	12	Bi-Color
	598-8640-207F	Yellow / Green	AlInGaP	590 / 570	135 / 50	2 / 2	140	0.7	20	12	Bi-Color
	598-8660-207F	Yellow / Red	AlInGaP	590 / 640	135 / 50	2 / 2.2	140	0.7	20	12	Bi-Color
	598-8610-307F	Red / Green / Blue	AlInGaP	635 / 525 / 470	60 / 120 / 80	2 / 3.2 /3.2	140	0.7	20	13	Tri-Color
	598-8920-307F	Red-Orange / Green / Blue	AlInGaP / InGaN / InGaN	625 / 525 / 470	120 / 150 / 60	2 / 3.2 / 3.2	140	0.7	20	13	Tri-Color
	598-8940-307F	Yellow / Green / Blue	AlInGaP / InGaN / InGaN	590 / 525 / 475	110 / 220 / 90	2 / 3.2 / 3.2	140	0.7	20	13	Tri-Color
1210 Series Package with Reflector (3.0mm X 2.5mm X Height)											
	597-7701-507F	Red/Green	GaAsP/GaP	653/575	6.3 / 16	2.0/2.2	100	1.3	20	14	Bi-Color
	597-7721-507F	Yellow/Green	GaAsP/GaP	589/575	6.3 / 21	2.1/2.2	100	1.3	20	14	Bi-Color

PLCC

PLCC	Dialight Part Number	Color	Material	Dom .λ Typ. (nm)	Intensity Typ. (mcd)	Forward Voltage Typ. (V)	Viewing Angle	Height	Test Current (mA)	Fig	Type
PLCC-2 Series Package with Reflector (3.5mm X 2.8mm X Height)											
	597-3001-207F	Red	GaAsP/GaP	620	10	2.0	120	1.9	20	24	Single Color
	597-3008-207F	Red	InGaAlP	630	12.6	1.8	120	1.9	2	24	Single Color
	597-3121-207F	Red	AlGaAs	645	35.5	1.75	120	1.9	10	24	Single Color
	597-3208-207F	Orange	InGaAlP	606	19.6	1.8	120	1.9	2	24	Single Color
	597-3211-207F	Orange	GaAsP/GaP	606	18.3	2.0	120	1.9	10	24	Single Color
	597-3231-207F	Yellow	AlInGaP	587	100	2.0	120	1.9	20	24	Single Color
	597-3301-207F	Green	GaAsP/GaP	570	19.6	2.0	120	1.9	10	24	Single Color
	597-3306-207F	Green	GaAlP	570	24	2.0	120	1.9	10	24	Single Color
	597-3308-207F	Green	InGaAlP	570	6.3	1.8	120	1.9	2	24	Single Color
	597-3401-207F	Yellow	GaAsP/GaP	587	12.6	2.0	120	1.9	10	24	Single Color
	597-3408-207F	Yellow	InGaAlP	587	15.7	1.8	120	1.9	2	24	Single Color
	597-3601-207F	Blue	InGaN	465	11	3.5	120	1.9	10	24	Single Color
	597-3901-207F	White	InGaN	x: 0.32 y: 0.31	135	3.5	120	1.9	20	24	Single Color
PLCC-4 Series Package with Reflector (3.5mm X 2.8mm X Height)											
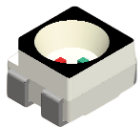	597-3029-207F	Red	InGaAlP	625	1800	2.15	120	1.9	50	25	Single Color
	597-3209-207F	Orange	InGaAlP	606	2240	2.15	120	1.9	50	25	Single Color
	597-3329-207F	Green	InGaN	525	1800	3.4	120	1.9	30	25	Single Color
	597-3409-207F	Yellow	InGaAlP	589	1800	2.15	120	1.9	50	25	Single Color
	597-3609-207F	Blue	InGaN	469	450	3.4	120	1.9	30	25	Single Color
	597-3909-207F	White	InGaN	x:0.30, y:0.28	1600	3.3	120	1.9	30	25	Single Color
	597-7701-207F	Red/Green	GaAsP/GaP	628/570	11.3/11.3	2.0	120	1.9	10	26	Bi-Color
	597-7721-207F	Yellow/Green	Gap/GaAsP	590/570	16/16	2.1/2.0	120	1.9	20	26	Bi-Color
	597-7731-207F	Red/Yellow	GaAlP	628/590	10.5/10.5	2.0/2.0	120	1.9	10	26	Bi-Color
	597-7741-207F	Orange/Green	GaAsP/GaP	606/570	11.3/17.6	2.0	120	1.9	10	26	Bi-Color
	597-7752-007F	Red/Green	AlInGaP/InGaN	625/525	350/850	2.0/3.15	120	1.9	20	26	Bi-Color
	597-7761-207F	Orange/Green	GaAsP/GaP	605/557	11.3/17.6	2.0	120	1.9	10	26	Bi-Color
	597-7781-207F	Red/Blue	InGaAlP/GaN	633/467	45/11	2.0/3.5	120	1.9	10	26	Bi-Color
	597-7712-207F	Red/ Green/ Blue	AlInGaP/ InGaN/ InGaN	617/ 528/ 470	190/ 370/ 98	2/3.5/3.6	120	1.9	20	27	Tri-Color

Reverse Mount

Reverse Mount	Dialight Part Number	Color	Material	Dom .λ Typ. (nm)	Intensity Typ. (mcd)	Forward Voltage Typ. (V)	Viewing Angle	Height	Test Current (mA)	Fig	Type
1206 Series Package (3.2mm X 1.6 X Height)											
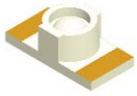	597-6001-607F	Red	AlInGaP	631	150	2.0	70	1.1	20	28	Single Color
	597-6201-607F	Orange	AlInGaP	605	260	2.0	70	1.1	20	28	Single Color
	597-6301-607F	Green	InGaN	525	410	3.0	70	1.1	20	28	Single Color
	597-6401-607F	Yellow	AlInGaP	587	240	2.0	70	1.1	20	28	Single Color
	597-6501-607F	Yellow-Green	AlInGaP	572	104	2.2	70	1.1	20	28	Single Color
	597-6601-607F	Blue	InGaN	470	112	3.0	70	1.1	20	28	Single Color
	597-6901-607F	White	InGaN	x .304,y.301	70	3	70	1.1	5	28	Single Color
	597-7703-607F	Red/Green	AlInGaP	631/571	55/45	2.0	130	1.1	20	29	Bi-Color
	597-7783-607F	Red/Blue	AlInGaP/InGaN	631/470	45/45	2.0/3.3	130	1.1	20	29	Bi-Color

Right Angle

Right Angle	Dialight Part Number	Color	Material	Dom .λ Typ. (nm)	Intensity Typ. (mcd)	Forward Voltage Typ. (V)	Viewing Angle	Height	Test Current (mA)	Fig	Type
0605 Series Package (1.6mm X 1.15mm X Height)											
	597-2003-507F	Red	AlInGaP	630	40	2.2	135	0.55	20	15	Single Color
	597-2033-507F	Red	AlInGaP	620	63	2.2	135	0.55	20	15	Single Color
	597-2203-507F	Orange	AlInGaP	605	100	2.2	135	0.55	20	15	Single Color
	597-2403-507F	Yellow	AlInGaP	590	63	2.0	135	0.55	30	15	Single Color
	597-2503-507F	Yellow-Green	AlInGaP	572	25	2.2	135	0.55	20	15	Single Color
	597-2603-507F	Blue	InGaN	470	140	3.2	140	0.55	20	15	Single Color
	597-2903-507F	White	InGaN	x: 0.31 y: 0.31	170	3.1	150	0.55	20	15	Single Color

Right Angle

Right Angle	Dialight Part Number	Color	Material	Dom .λ Typ. (nm)	Intensity Typ. (mcd)	Forward Voltage Typ. (V)	Viewing Angle	Height	Test Current (mA)	Fig	Type
1208 Series Package (3.0mm X 2.0mm X Height)											
	597-2002-407F	Red	AlInGaP	626	50	1.9	130	1	20	16	Single Color
	597-2111-407F	Red	GaAlAs	647	12.4	1.7	130	1	20	16	Single Color
	597-2201-407F	Amber	GaAsP/GaP	606	3	2.2	130	1	20	16	Single Color
	597-2212-407F	Orange	AlInGaP	605	65	1.9	130	1	20	16	Single Color
	597-2222-407F	Yellow	AlInGaP	590	65	1.9	130	1	20	16	Single Color
	597-2311-407F	Green	GaP	567	5.2	2.1	130	1	20	16	Single Color
	597-2401-407F	Yellow	GaAsP/GaP	590	3	2.2	130	1	20	16	Single Color
	597-2413-407F	Yellow	GaAsP/GaP	586	8.8	2.1	130	1	25	16	Single Color
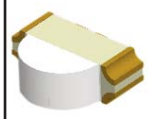	597-2002-607F	Red	AlInGaP	631	125	2.0	130	1	20	17	Single Color
	597-2211-607F	Orange	AlInGaP	605	125	2.0	130	1	20	17	Single Color
	597-2222-607F	Yellow	AlInGaP	589	125	2.0	130	1	20	17	Single Color
	597-2501-607F	Green	AlInGaP	572	50	2.0	130	1	20	17	Single Color
	597-2601-607F	Green	InGaN	525	195	3.2	130	1	20	17	Single Color
	597-2901-607F	Blue	InGaN	470	125	3.0	130	1	20	17	Single Color
	597-2723-607F	Yellow/Green	AlInGaP	589/571	75/35	2.0	130	1	20	18	Bi-Color
	597-2751-607F	Red/Green	AlInGaP	631/571	45/35	2.0	130	1	20	18	Bi-Color
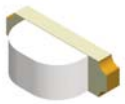	597-2712-607F	Red/ Green/ Blue	AlInGaP/ InGaN/ InGaN	624/ 525/ 470	110/ 280/ 100	2/ 3.5/ 3.5	130	1	20	19	Tri-Color
1208 Series Package (3.2mm X 1.5mm X Height) Note size difference											
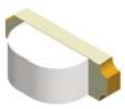	598-8310-117F	Red	AlInGaP	635	40	2.2	140	1	20	20	Single Color
	598-8320-117F	Red-Orange	AlInGaP	625	150	2	140	1	20	20	Single Color
	598-8330-117F	Orange	AlInGaP	605	80	2	140	1	20	20	Single Color
	598-8340-117F	Yellow	AlInGaP	593	130	2	140	1	20	20	Single Color
	598-8350-117F	Yellow	AlInGaP	587	130	2	140	1	20	20	Single Color
	598-8360-117F	Yellow-Green	AlInGaP	573	40	2	140	1	20	20	Single Color
	598-8370-117F	Green	GaP	566	20	3.2	140	1	20	20	Single Color
	598-8380-117F	Green	InGan	523	220	3.2	140	1	20	20	Single Color
	598-8391-117F	Blue	InGan	473	90	3.2	140	1	20	20	Single Color
	598-8510-207F	Red / Green	AlInGaP	635 / 565	60 / 40	2 / 2	160	1	20	21	Bi-Color
	598-8520-207F	Red Orange / Green	AlInGaP	625 / 568	110 / 40	2	160	1	20	21	Bi-Color
	598-8530-207F	Orange / Green	AlInGaP	605 / 568	100 / 40	2 / 2	160	1	20	21	Bi-Color
	598-8540-207F	Yellow / Green	AlInGaP	590 / 570	135 / 50	2 / 2	160	1	20	21	Bi-Color
	598-8550-207F	Yellow / Green	AlInGaP / InGaN	592 / 530	120 / 120	2 / 3.2	160	1	20	21	Bi-Color
	598-8560-207F	Yellow / Red	AlInGaP	590 / 640	135 / 50	2 / 2.2	160	1	20	21	Bi-Color
	598-8810-307F	Red / Green / Blue	AlInGaP / InGaN / InGaN	635 / 525 / 470	60 / 120 / 90	2 / 3.2 / 3.2	160	1	20	22	Tri-Color
	598-8820-307F	Red-Orange / Green / Blue	AlInGaP / InGaN / InGaN	625 / 525 / 470	120 / 150 / 60	2 / 3.2 / 3.2	160	1	20	22	Tri-Color
	598-8840-307F	Yellow / Green / Blue	AlInGaP / InGaN / InGaN	590 / 525 / 475	110 / 220 / 90	2 / 3.2 / 3.2	160	1	20	22	Tri-Color
1616 Series Package with Reflector (4mm X 4mm X Height)											
	597-2001-213F	Red	Gap/GaAsP	630	7.8	1.8	120	3.6	2	23	Single Color
	597-2201-815F	Yellow	AlInGaP	587	590	2.1	120	3.6	20	23	Single Color
	597-2301-213F	Green	GaP/GaP	570	5.6	1.8	120	3.6	2	23	Single Color
	597-2321-816F	Green	InGaN	528	627	3.5	120	3.6	20	23	Single Color
	597-2401-213F	Yellow	Gap/GaAsP	587	14	1.8	120	3.6	2	23	Single Color
	597-2301-824F	Green	AlInGaP	570	78	2.0	120	3.6	20	23	Single Color
	597-2601-817F	Blue	InGaN	470	157	3.6	120	3.6	20	23	Single Color
	597-2901-822F	White	InGaN	x: 0.33 y: 0.33	532	3.6	120	3.6	20	23	Single Color

Drawings

Micro LED® SMD LED

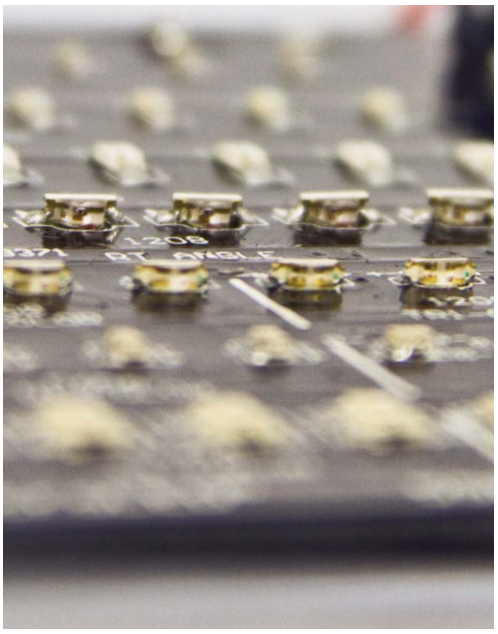

0603 Single Color (Fig 1)

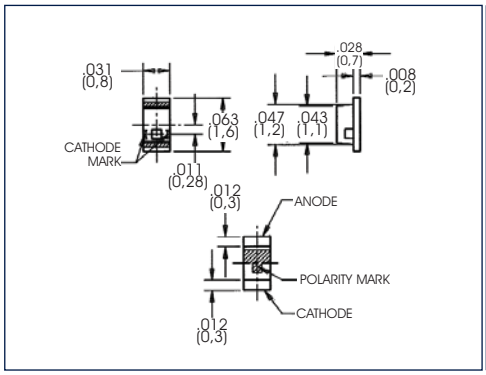

0603 Single Color (Fig 2)

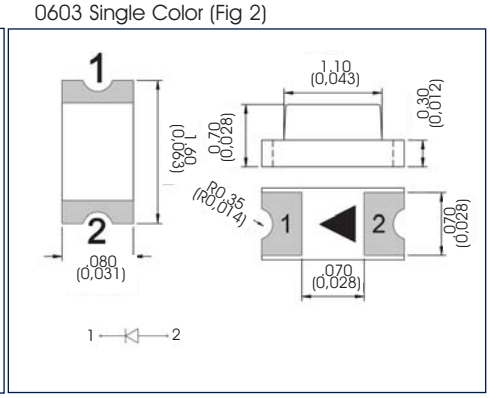

0606 Bi-Color (Fig 3)

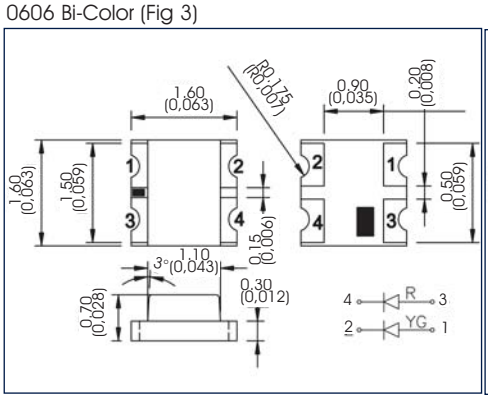

0606 Tri-Color (Fig 4)

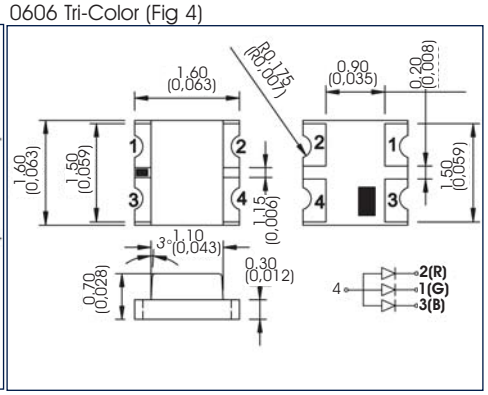

0805 Single Color (Fig 5)

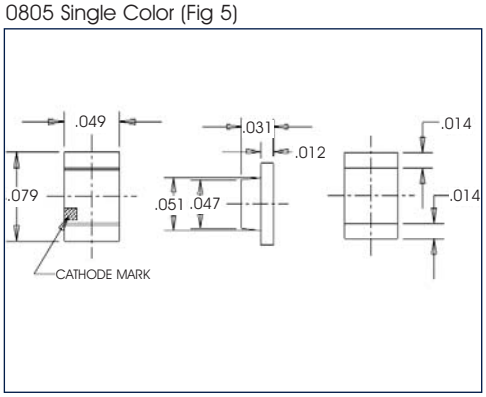

0805 Single Color (Fig 6)

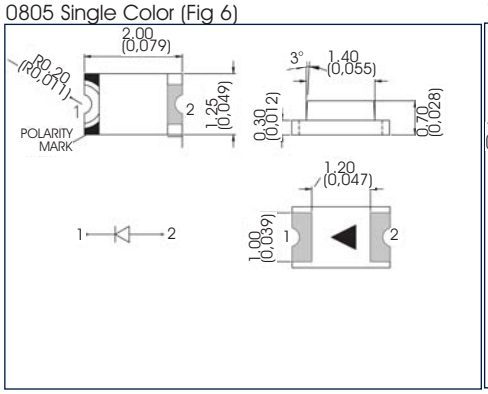

1206 Single Color (Fig 7)

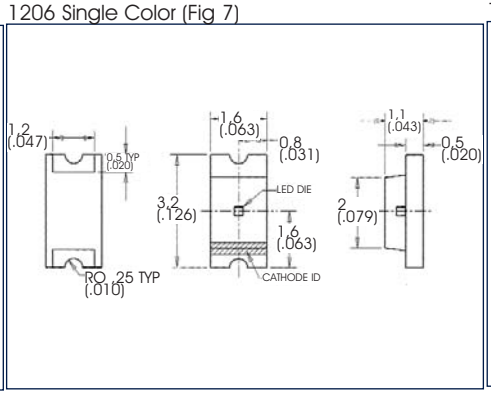

1206 Single Color (Fig 8)

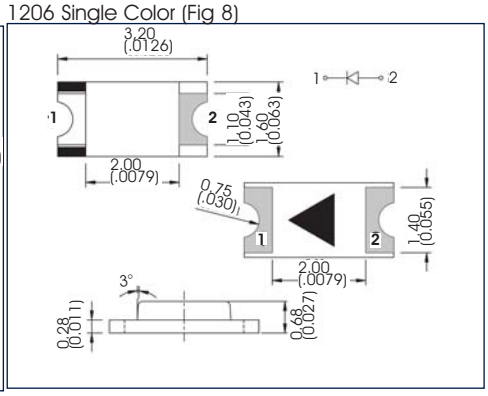

1206 Single Color with Lens (Fig 9)

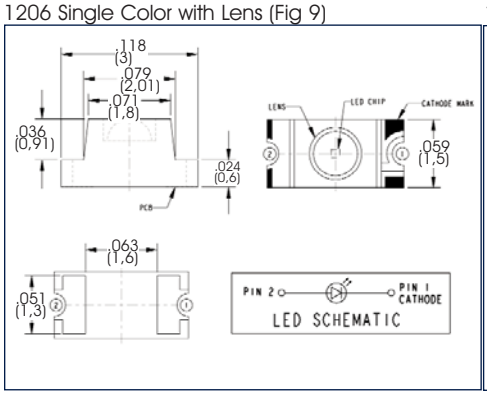

1208 Single Color with Reflector (Fig 10)

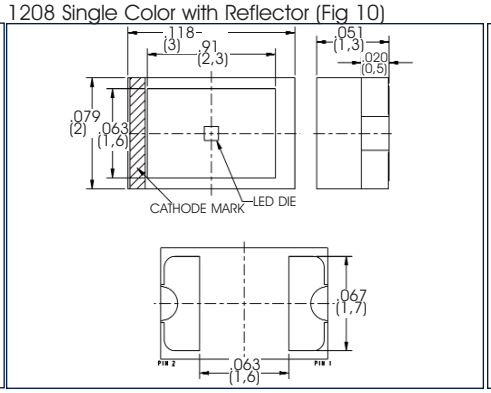

1210 Bi-Color (Fig 11)

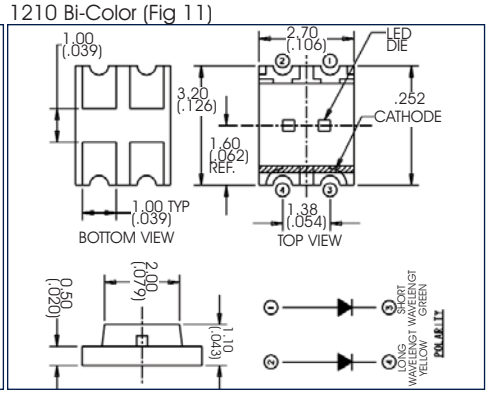

Drawings

Micro LED® SMD LED (cont.)

1210 Bi-Color (Fig 12)

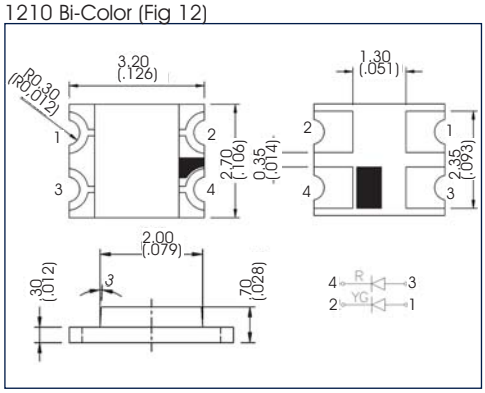

1210 Tri-Color (Fig 13)

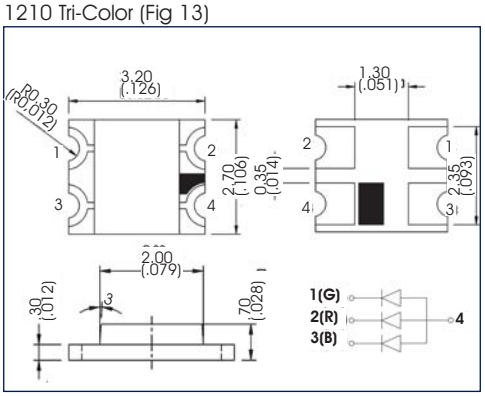

1210 Bi-Color with Reflector (Fig 14)

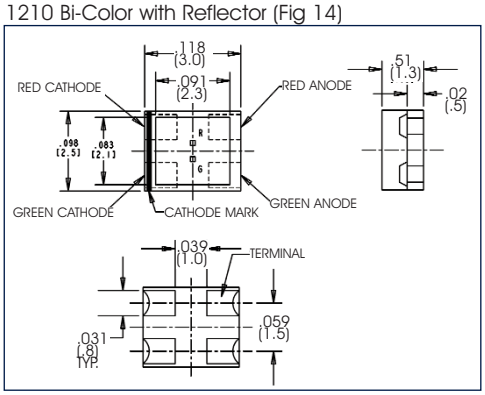

Right Angle

0605 Single Color (Fig 15)

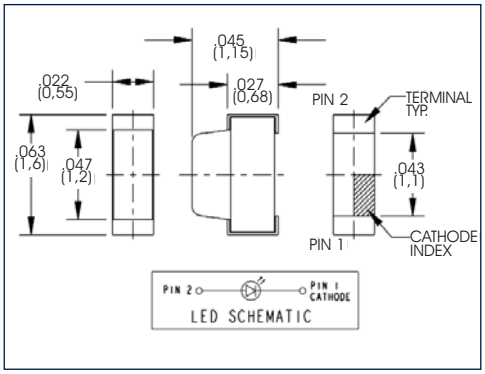

1208 Single Color (Fig 16)

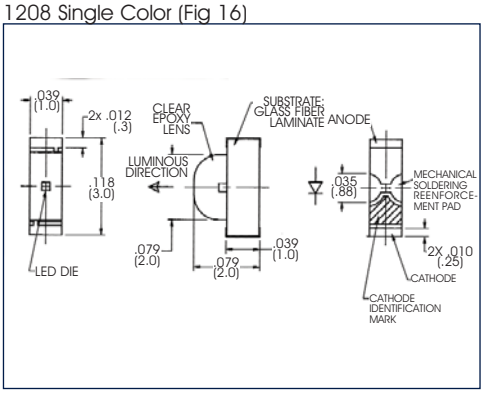

1208 Single Color (Fig 17)

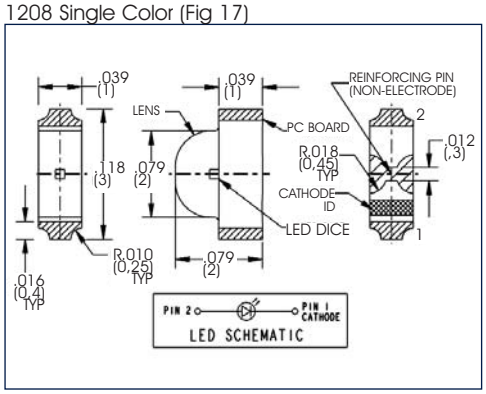

1208 Bi-Color (Fig 18)

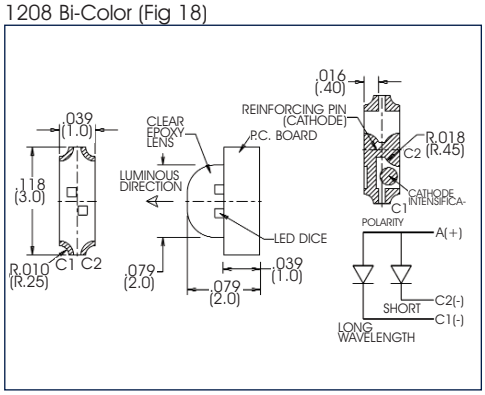

1208 Tri-Color (Fig 19)

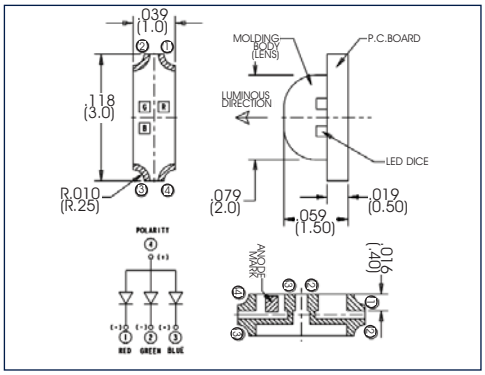

1208 Single Color (Fig 20)

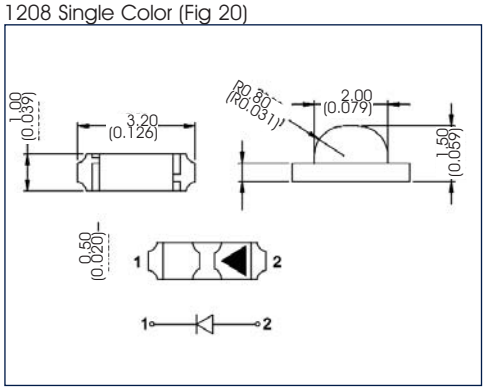

1208 Bi-Color (Fig 21)

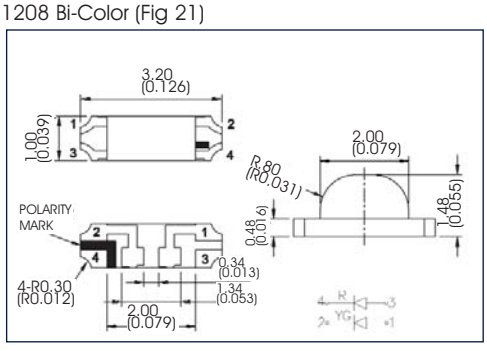

1208 Tri-Color (Fig 22)

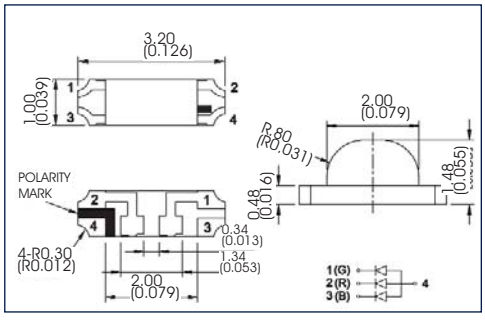

1616 Single Color (Fig 23)

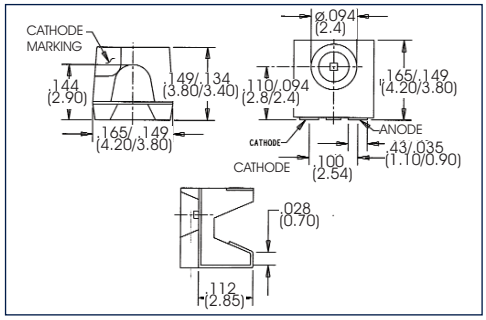

Drawings

PLCC

PLCC-2 Single Color (Fig 24)

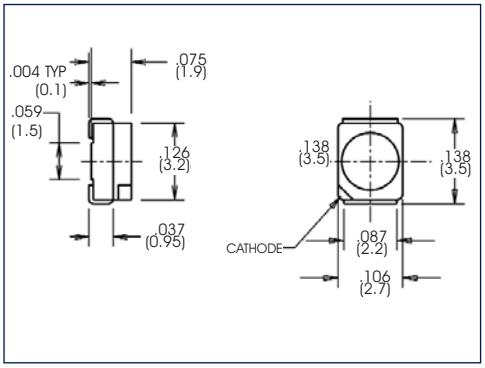

PLCC-4 Single Color (Fig 25)

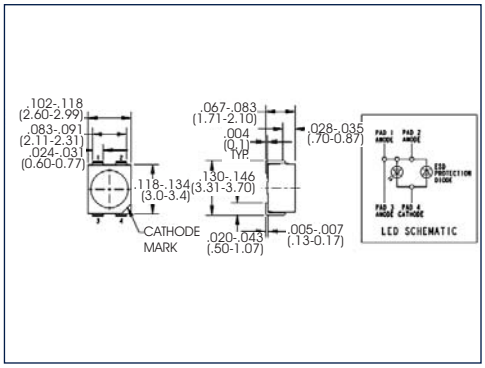

PLCC-4 Bi-Color (Fig 26)

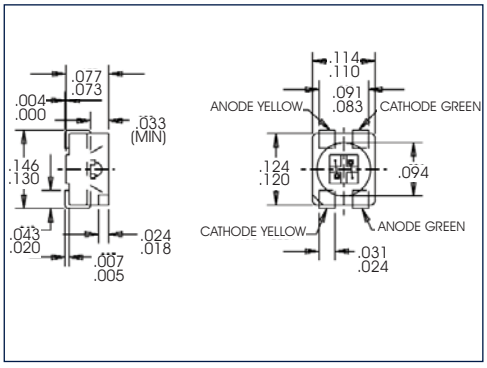

PLCC-4 Tri-Color (Fig 27)

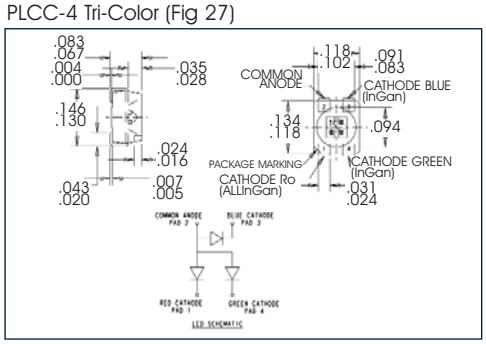

Reverse Mount

1206 Single Color (Fig 28)

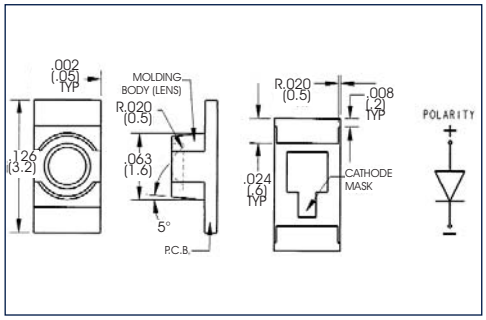

1206 Bi-Color (Fig 29)

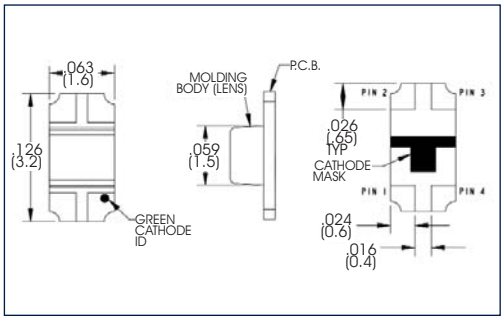

Prism® Single Color Pad Layouts

591 Single Color Pad Layout (page 3)

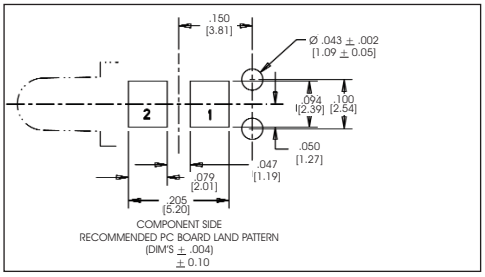

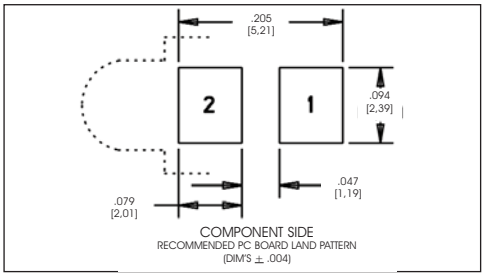

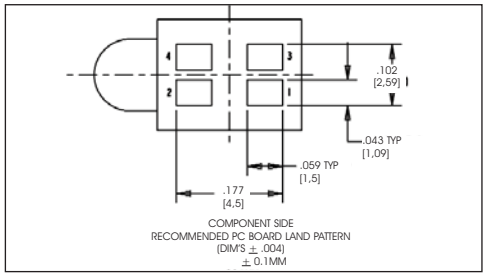

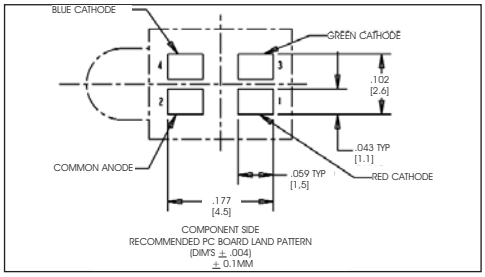

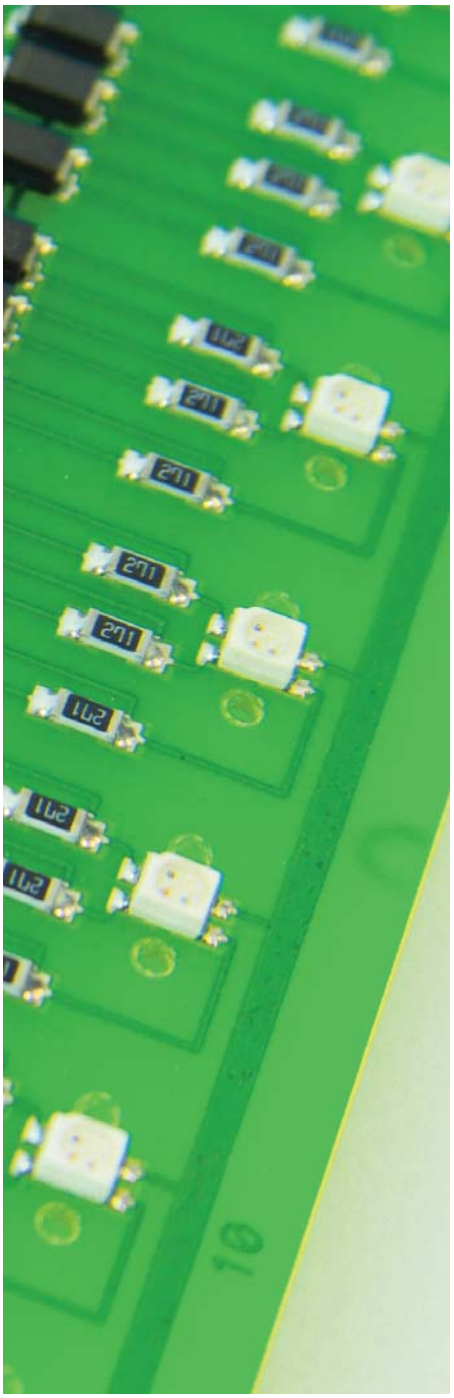

Dialight

NEW! 2mA

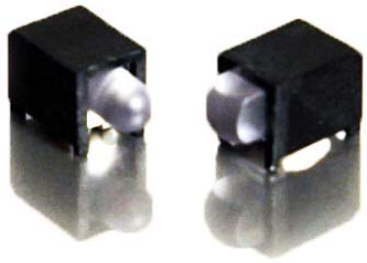

2mA Low Current Prism® CBI®

Order Code

5 9 1 - 2 X 04 - X X X F

Color | Lens Type | Package Options | RoHS Compliant

Color	
0	Red
3	Green
4	Yellow
5	Orange

Lens Type	
0	Round
1	Square

Packaging Type	
02	20 piece strip
07	7" Reel dia. / 400pcs
13	13" Reel dia. / 1600pcs

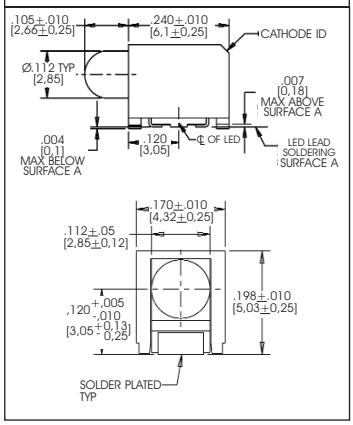

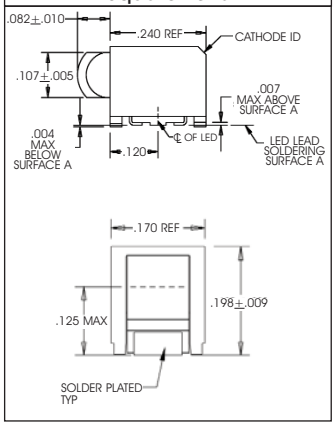

Low Current Surface Mount LED

NEW! 2mA

Low Current SMT LEDs	Dialight Part Number	Color	Material	Dom. .λ Typ. (nm)	Intensity Typ. (mcd)	Forward Voltage Typ. (V)	Viewing Angle	Height	Test Current (mA)	Fig	Type
PLCC-2 Series Package with Reflector (3.5mm X 2.8mm X Height)											
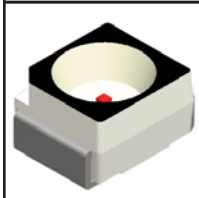	597-3008-207F	Red	InGaAlP	630	12.6	1.8	120	1.9	2mA	23	Single Color
	597-3208-207F	Orange	InGaAlP	606	19.6	1.8	120	1.9	2mA	23	Single Color
	597-3308-207F	Green	InGaAlP	570	6.3	1.8	120	1.9	2mA	23	Single Color
	597-3408-207F	Yellow	InGaAlP	587	15.7	1.8	120	1.9	2mA	23	Single Color
Right Angle - 1616 Series Package with Reflector (4mm X 4mm X Height)											
	597-2001-213F	Red	Gap/GaAsP	630	7.8	1.8	120	3.6	2mA	22	Single Color
	597-2301-213F	Green	GaP/GaP	570	5.6	1.8	120	3.6	2mA	22	Single Color
	597-2401-213F	Yellow	Gap/GaAsP	587	14	1.8	120	3.6	2mA	22	Single Color
Reverse Mount - 1206 Series Package (3.2mm X 1.6 X Height)											
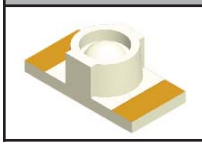	597-6901-607F	White	InGaN	x .304,y.301	70	3	70	1.1	5ma	27	Single Color

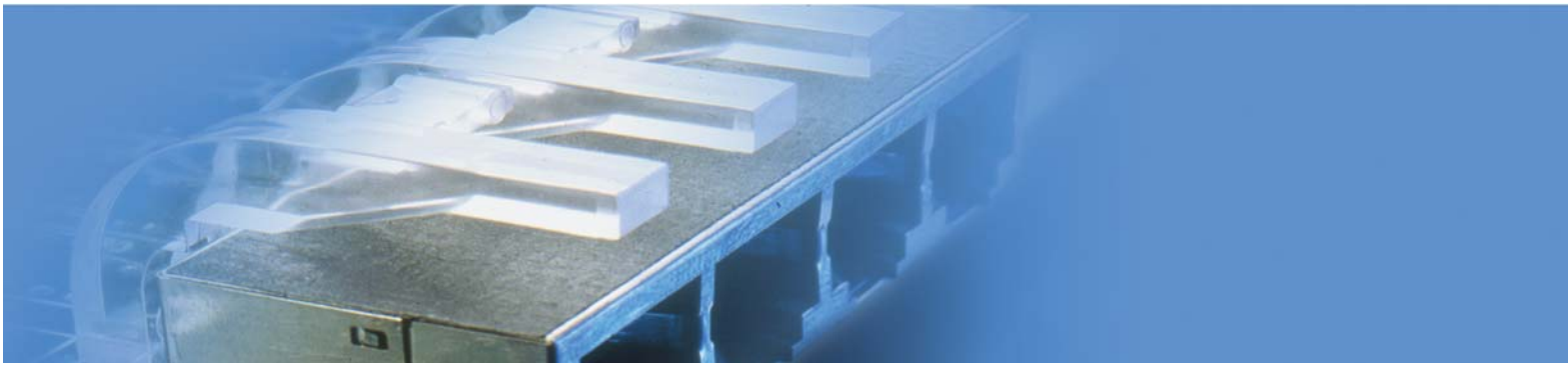

Other Opto Electronic Products
Offered by Dialight

40 Years of LED Experience

Through Hole CBI® Circuit Board Indicators

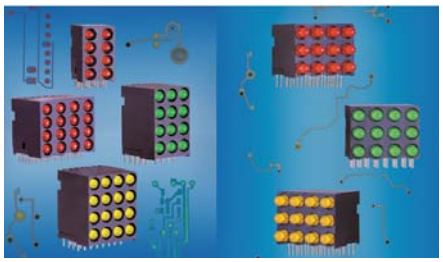

- ▷ Housed LEDs in variety of configurations including:
  Right angle, vertical & horizontal ganged arrays in single bi, tri, and quad blocks
- ▷ 2mm, 3mm & 5mm
- ▷ Perfect for direct view or backlighting applications
- ▷ Variety of colors and LED types including:
  Single & bi-color, diffused, water-clear, tinted, super-bright, & high efficiency
- ▷ Over 2,500 variations, with custom LED placement available
- ▷ RoHS compliant

CBI® Selector Guide
www.dialight.com/Assets/Brochures_And_Catalogs/Indication/CBI_Selector_Guide.pdf

Based LED Bulbs 585 & 586 Series

- ▷ Replaces traditional miniature incandescent bulbs with rugged long-lasting and energy-efficient LEDs
- ▷ Design incorporates the most common base styles including:
  T 1 ¾ Midget Flange, Wedge Base and Bi-Pin, T 3 ¼ Mini-Bayonet and Mini-Screw, T2 Telephone Slide and 15 mm Bayonet
- ▷ Voltages from 6, 14 and 28 VDC, 6-36 VDC multi-voltage operation and 125 VAC with non-polarized versions available
- ▷ Colors include – red, green, yellow, blue and white
- ▷ Check *Dialight's Incandescent / Based LED Cross Reference* for our specific replacement part number

Based LED Selector Guide
http://www.dialight.com/Assets/Brochures_And_Catalogs/Indication/Based_LED_selector_guide.pdf

LED Panel Mount Indicators

- ▷ Incorporating the latest LED technology in a tamper-proof enclosure
- ▷ Variety of sizes from .156" – 1"
- ▷ Operating voltages 2-28 VDC, 125 and 230 VAC
- ▷ Some feature a water-tight seal to NEMA 4X / IP66
- ▷ Available in red, green, yellow, orange, blue, cyan and white
- ▷ 556 series is UL recognized, Class 1, Div. II certified versions available
- ▷ Relampable Data Lamp series is available
- ▷ Most use lock washer and nut for secure mounting

LED Panel Mount Indicator Selector Guide
www.dialight.com/Assets/Brochures_And_Catalogs/Indication/VER-5x0x.pdf

Optopipe® Light Pipes for use with Micro LED® SMD

- ▷ Light pipes act as conduit for directing light from SMD to viewing angles
- ▷ Right angle and vertical available in almost 200 sizes and shapes
- ▷ Provides ESD protection
- ▷ Allows edge lighting over and around a variety of components including SFP assemblies and RJ45 jacks
- ▷ UL 94V0
- ▷ Standard and custom available
- ▷ RoHS compliant

Optopipe® Light Pipes Selector Guide
www.dialight.com/Assets/Brochures_And_Catalogs/Indication/Lightpipe_Selector_Guide.pdf

Dialight

Dialight reserves the right to make changes at any time in order to supply the best product possible. The most current version of this document will always be available at: http://www.dialight.com/Assets/Brochures_And_Catalogs/Indication/SMT_selector_guide.pdf