HAOYU

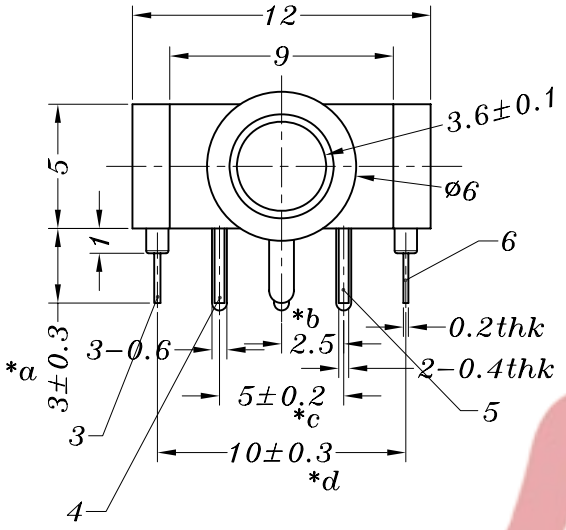

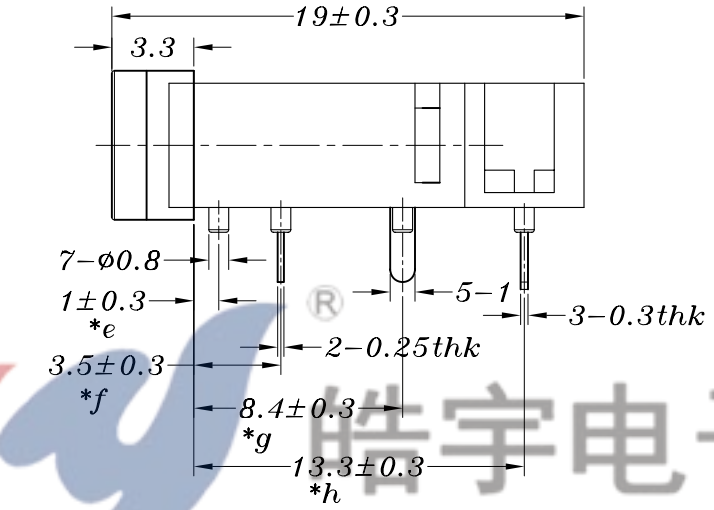

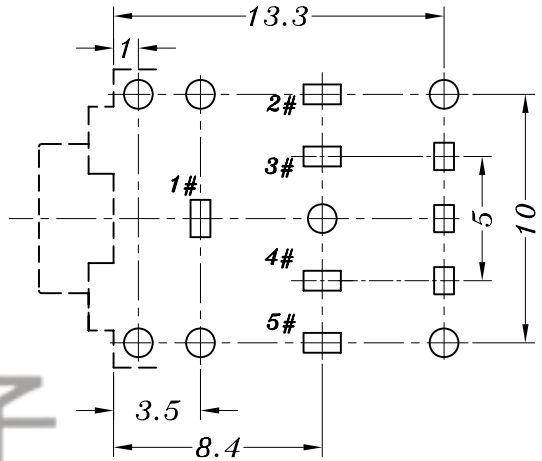

P.C.B LAYOUT

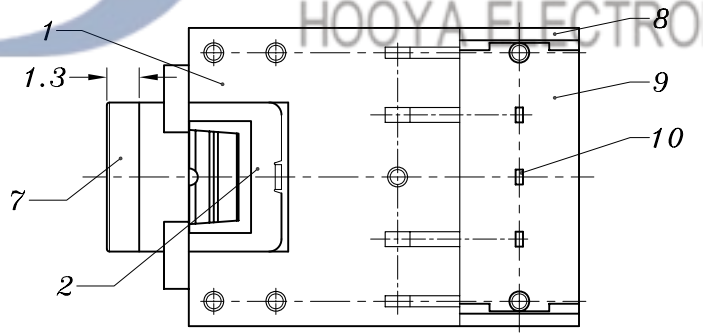

皓宇电子
HOOYA ELECTRONICS

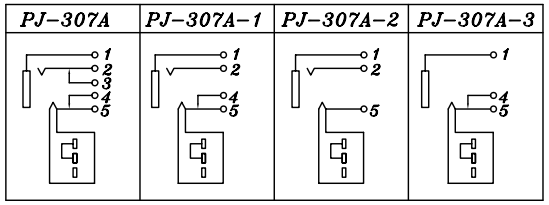

SCHEMATIC

NO.	PART NAME	MATERIAL	QTY	FINISHING
12	PJ307D CONTACT CLIP	PBS	1	Ag CLAD
11	PJ307D SLIDER	NYLON	1	BLACK
10	PJ307D TERMINAL	BRASS	1	Ag PLATED
9	PJ307D BASE	PHENOLIC RESIN	1	YELLOW
8	PJ307D HOUSING	NYLON	1	BLACK
7	PJ307 AXIS GUIDE	BRASS	1	Ni/Au PLATED
6	PJ307E 5#SPRING	SUS	1	Ag PLATED
5	PJ307G 4#CURVE PIECE	BRASS	1	Ag PLATED
4	PJ307G 3#CURVE PIECE	BRASS	1	Ag PLATED
3	PJ307G 2#SPRING	PBS	1	Ag PLATED
2	PJ307 1#CONTACT FOOT	PBS	1	Ag PLATED
1	PJ307 CASE	PBT	1	BLACK

TOLERANCE UNLESS SPECIFIED
UP TO 5mm: ±0.1
ABOVE 5mm: ±0.2
ANGULAR ±1°

NO	DATE	REVISIONS	BY	APPD
A0	2017.10.26	首次发行	GYW	

TITLE:PHONE JACK
MODEL:PJ−307A−1.3
UNIT : MM
SCALE: 3:1
ROHS COMPLIANT
DWN
CHK'D
APPD
PRO.AGL:
REV :A0

HAOYU(HONGKONG)LIMITED
皓宇(香港)有限公司