DS320PR810 Eight-Channel Linear Redriver for PCIe 5.0, CXL 1.1

1 Features

- Eight-channel linear redriver supporting PCIe 5.0, CXL 2.0, UPI 2.0 up to 32 Gbps
- Supports most ac coupled interfaces including DP, SAS, SATA, XFI
- CTLE boosts up to 22 dB at 16 GHz
- Ultra-low latency of 100 ps
- Low additive random jitter of 75 fs for PRBS data
- Excellent return loss of -10 dB at 16 GHz
- Single 3.3 V supply
- Internal voltage regulator provides immunity to supply noise
- Low active power of 160 mW / channel
- No heat sink required
- Pin-strap, SMBus or EEPROM programming
- Automatic receiver detection for PCIe use cases
- Protocol agnostic linear redriver allows seamless support for PCIe link training
- Support for x4, x8, x16, x24 bus width with one or multiple DS320PR810
- Temperature range of –40 °C to 85 °C
- 5.5 mm × 10 mm, 64 pin WQFN package

2 Applications

- Rack server, and microserver and tower server
- High performance computing
- Hardware accelerator
- Network attached storage
- Storage area network (SAN) and host bus adapter (HBA) card
- Network interface card (NIC)
- Desktop PC/motherboard

3 Description

The DS320PR810 is an eight channel low-power high-performance linear repeater or redriver designed to support PCIe 5.0, CXL 2.0, UPI 2.0, and other interfaces up to 32 Gbps.

The DS320PR810 receivers deploy continuous time linear equalizers (CTLE) to provide a programmable high-frequency boost. The equalizer can open an input eye that is completely closed due to inter-symbol interference (ISI) induced by an interconnect medium, such as PCB traces. The CTLE receiver is followed by a linear output driver. The linear data-paths of DS320PR810 preserve transmit preset signal characteristics. The linear redriver becomes part of the passive channel that as a whole get link trained for best transmit and receive equalization settings. This transparency in the link training protocol results in best electrical link and lowest possible latency. Low channel-channel cross-talk, low additive jitter and excellent return loss makes the device almost a passive element in the link, but with its useful equalization. The data-path of the device uses an internally regulated power rail that provides high immunity to any supply noise on the board.

The device also has low AC and DC gain variation providing consistent equalization in high volume platform deployment.

Package Information(1)

PART NUMBER	PACKAGE	BODY SIZE (NOM)
DS320PR810	WQFN (NJX, 64)	5.50 mm × 10.00 mm

(1) For all available packages, see the orderable addendum at the end of the data sheet.

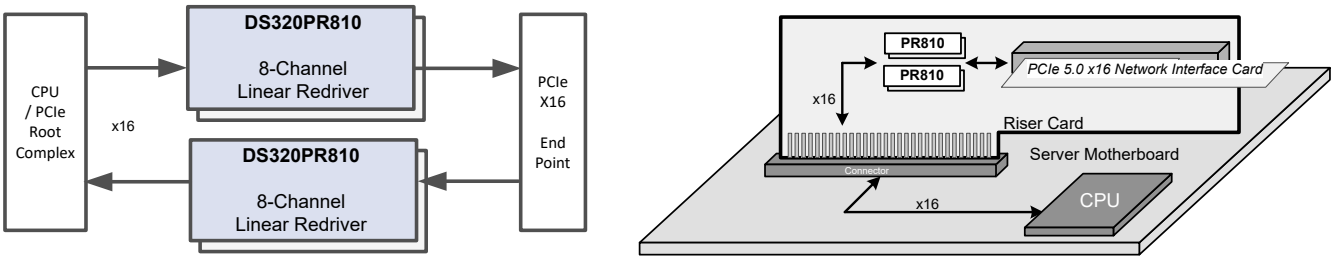

Typical Application

An IMPORTANT NOTICE at the end of this data sheet addresses availability, warranty, changes, use in safety-critical applications, intellectual property matters and other important disclaimers. PRODUCTION DATA.

Table of Contents

1 Features....1
2 Applications....1
3 Description....1
4 Revision History....2
5 Pin Configuration and Functions....3
6 Specifications....7
6.1 Absolute Maximum Ratings....7
6.2 ESD Ratings....7
6.3 Recommended Operating Conditions....7
6.4 Thermal Information....8
6.5 DC Electrical Characteristics....8
6.6 High Speed Electrical Characteristics....9
6.7 SMBUS/I^{2}C Timing Charateristics....10
6.8 Typical Characteristics....12
6.9 Typical Jitter Characteristics....13
7 Detailed Description....14
7.1 Overview....14
7.2 Functional Block Diagram....14
7.3 Feature Description....15
7.4 Device Functional Modes....16
7.5 Programming....17
8 Application and Implementation....22
8.1 Application Information....22
8.2 Typical Applications....22
9 Power Supply Recommendations....28
10 Layout....28
10.1 Layout Guidelines....28
10.2 Layout Example....29
11 Device and Documentation Support....30
11.1 Receiving Notification of Documentation Updates....30
11.2 Support Resources....30
11.3 Trademarks....30
11.4 Electrostatic Discharge Caution....30
11.5 Glossary....30
12 Mechanical, Packaging, and Orderable Information....30

4 Revision History

DATE	REVISION	NOTES
August 2022	*	Initial Release

Copyright © 2022 Texas Instruments Incorporated

5 Pin Configuration and Functions

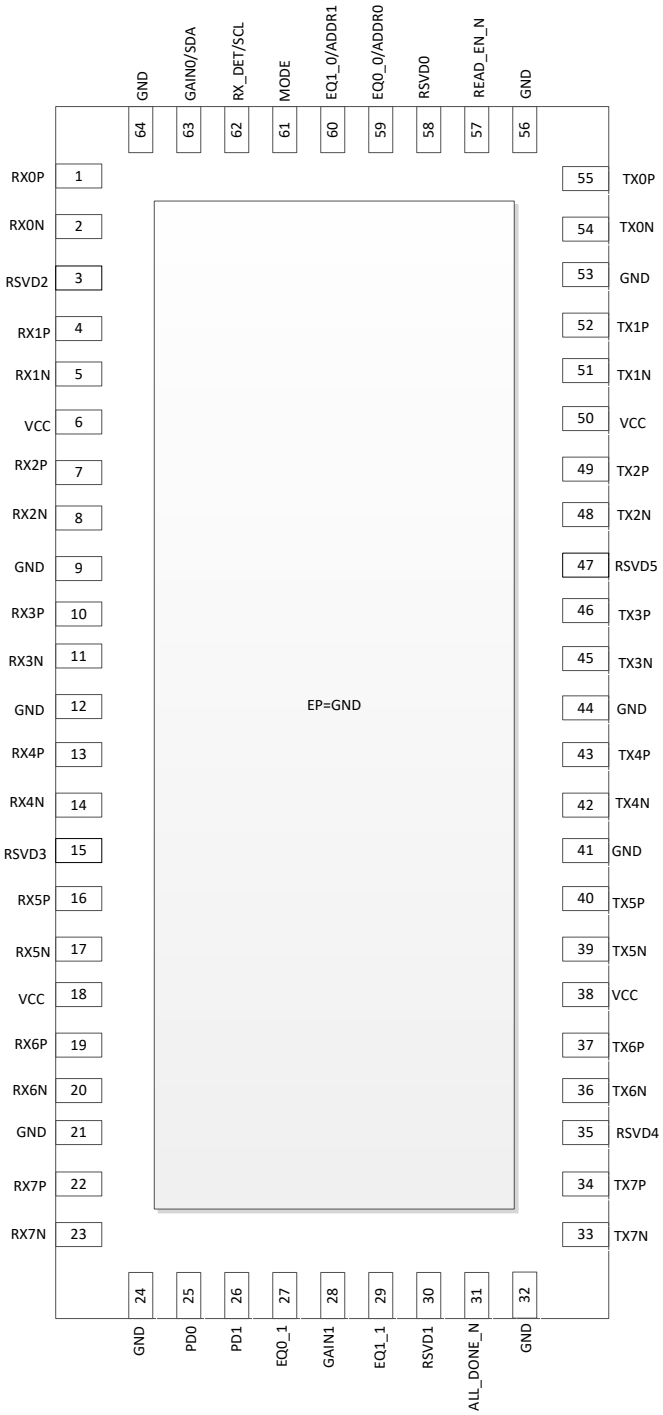

Figure 5-1. NJX Package, 64-Pin WQFN (Top View)

Table 5-1. Pin Functions

PIN		TYPE[(1)]	DESCRIPTION
NAME	NO.		
ALL_DONE_N	31	O, 3.3 V open drain	In **SMBus/I²C Primary mode**: Indicates the completion of a valid EEPROM register load operation. External pullup resistor such as 4.7 kΩ required for operation. High: External EEPROM load failed or incomplete Low: External EEPROM load successful and complete In **SMBus/I²C Secondary/Pin mode**: This output is High-Z. The pin can be left floating.
MODE	61	I, 5-level	Sets device control configuration modes. 5-level IO pin as provided in Table 7-4. The pin can be exercised at device power up or in normal operation mode. L0: **Pin mode** – device control configuration is done solely by strap pins. L1: **SMBus/I²C Primary mode** – device control configuration is read from external EEPROM. When the DS320PR810 has finished reading from the EEPROM successfully, it will drive the ALL_DONE_N pin LOW. SMBus/I²C secondary operation is available in this mode before, during or after EEPROM reading. Note: during EEPROM reading if the external SMBus/I²C primary wants to access DS320PR810 registers it must support arbitration. L2: **SMBus/I²C Secondary mode** – device control configuration is done by an external controller with SMBus/I²C primary. L3 and L4 (Float): RESERVED – TI internal test modes.
EQ0 / ADDR0	59	I, 5-level	In **Pin mode:** Sets receiver linear equalization (CTLE) boost for channels 0-3 (Bank 0) as provided in Table 7-1. These pins are sampled at device power-up only. In **SMBus/I²C mode:** Sets SMBus / I²C secondary address as provided in Table 7-5. These pins are sampled at device power-up only.
EQ1 / ADDR1	60	I, 5-level	
EQ0_1	27	I, 5-level	Sets receiver linear equalization (CTLE) boost for channels 4-7 (Bank 1) as provided in Table 7-1 in Pin mode. The pin is sampled at device power-up only.
EQ1_1	29	I, 5-level	
GAIN0 / SDA	63	I, 5-level / I/O, 3.3 V LVCMOS, open drain	In **Pin mode:** Flat gain (DC and AC) from the input to the output of the device for channels 0-3 (Bank 0). The pin is sampled at device power-up only. In **SMBus/I²C mode:** 3.3 V SMBus/I²C data. External 1 kΩ to 5 kΩ pullup resistor is required as per SMBus / I²C interface standard.
GAIN1	28	I, 5-level	Flat gain (DC and AC) from the input to the output of the device for channels 4-7 (Bank 1) in Pin mode. The pin is sampled at device power-up only.
GND	EP, 9, 12, 21, 24, 32, 41, 44, 53, 56, 64	P	Ground reference for the device. EP: the Exposed Pad at the bottom of the QFN package. It is used as the GND return for the device. The EP should be connected to one or more ground planes through the low resistance path. A via array provides a low impedance path to GND. The EP also improves thermal dissipation.
PD0	25	I, 3.3 V LVCMOS	2-level logic controlling the operating state of the redriver. Active in all device control modes. The pin has internal 1-MΩ weak pull-down resistor. The pin triggers PCIe Rx detect state machine when toggled. High: power down for channels 0-3 Low: power up, normal operation for channels 0-3
PD1	26	I, 3.3 V LVCMOS	2-level logic controlling the operating state of the redriver. Active in all device control modes. The pin has internal 1-MΩ weak pull-down resistor. The pin triggers PCIe Rx detect state machine when toggled. High: power down for channels 4-7 Low: power up, normal operation for channels 4-7
READ_EN_N	57	I, 3.3 V LVCMOS	In **SMBus/I²C Primary mode**: After device power up, when the pin is low, it initiates the SMBus / I²C Primary mode EEPROM read function. When EEPROM read is complete (indicated by assertion of ALL_DONE_N low), this pin can be held low for normal device operation. During the EEPROM load process the device's signal path is disabled. In **SMBus/I²C Secondary and Pin modes:** In these modes the pin is not used. The pin can be left floating. The pin has internal 1-MΩ weak pull-down resistor.
RSVD0	58	—	Reserved use for TI. The pin must be left floating (NC).

Copyright © 2022 Texas Instruments Incorporated

Table 5-1. Pin Functions (continued)

PIN		TYPE[(1)]	DESCRIPTION
NAME	NO.		
RSVD1	30	—	Reserved use for TI. The pin must be left floating (NC).
RX_DET / SCL	62	I, 5-level / I/O, 3.3 V LVCMOS, open drain	In **Pin mode:** Sets receiver detect state machine options as provided in Table 7-3. The pin is sampled at device power-up only. In **SMBus/I^{2}C mode:** 3.3V SMBus/I^{2}C clock. External 1 kΩ to 5 kΩ pullup resistor is required as per SMBus / I^{2}C interface standard.
RX0N	2	I	Inverting differential inputs to the equalizer. Integrated 50 Ω termination resistor from the pin to internal CM bias voltage. Channel 0.
RX0P	1	I	Non-inverting differential inputs to the equalizer. Integrated 50 Ω termination resistor from the pin to internal CM bias voltage. Channel 0.
RX1N	5	I	Inverting differential inputs to the equalizer. Integrated 50 Ω termination resistor from the pin to internal CM bias voltage. Channel 1.
RX1P	4	I	Non-inverting differential inputs to the equalizer. Integrated 50 Ω termination resistor from the pin to internal CM bias voltage. Channel 1.
RX2N	8	I	Inverting differential inputs to the equalizer. Integrated 50 Ω termination resistor from the pin to internal CM bias voltage. Channel 2.
RX2P	7	I	Non-inverting differential inputs to the equalizer. Integrated 50 Ω termination resistor from the pin to internal CM bias voltage. Channel 2.
RX3N	11	I	Inverting differential inputs to the equalizer. Integrated 50 Ω termination resistor from the pin to internal CM bias voltage. Channel 3.
RX3P	10	I	Non-inverting differential inputs to the equalizer. Integrated 50 Ω termination resistor from the pin to internal CM bias voltage. Channel 3.
RX4N	14	I	Inverting differential inputs to the equalizer. Integrated 50 Ω termination resistor from the pin to internal CM bias voltage. Channel 4.
RX4P	13	I	Non-inverting differential inputs to the equalizer. Integrated 50 Ω termination resistor from the pin to internal CM bias voltage. Channel 4.
RX5N	17	I	Inverting differential inputs to the equalizer. Integrated 50 Ω termination resistor from the pin to internal CM bias voltage. Channel 5.
RX5P	16	I	Non-inverting differential inputs to the equalizer. An on-chip, 100 Ω termination resistor connects RXP to RXN. Channel 5.
RX6N	20	I	Inverting differential inputs to the equalizer. Integrated 50 Ω termination resistor from the pin to internal CM bias voltage. Channel 6.
RX6P	19	I	Non-inverting differential inputs to the equalizer. Integrated 50 Ω termination resistor from the pin to internal CM bias voltage. Channel 6.
RX7N	23	I	Inverting differential inputs to the equalizer. Integrated 50 Ω termination resistor from the pin to internal CM bias voltage. Channel 7.
RX7P	22	I	Non-inverting differential inputs to the equalizer. Integrated 50 Ω termination resistor from the pin to internal CM bias voltage. Channel 7.
TX0N	54	O	Inverting pin for 100 Ω differential driver output. Channel 0.
TX0P	55	O	Non-inverting pin for 100 Ω differential driver output. Channel 0.
TX1N	51	O	Inverting pin for 100 Ω differential driver output. Channel 1.
TX1P	52	O	Non-inverting pin for 100 Ω differential driver output. Channel 1.
TX2N	48	O	Inverting pin for 100 Ω differential driver output. Channel 2.
TX2P	49	O	Non-inverting pin for 100 Ω differential driver output. Channel 2.
TX3N	45	O	Inverting pin for 100 Ω differential driver output. Channel 3.
TX3P	46	O	Non-inverting pin for 100 Ω differential driver output. Channel 3.
TX4N	42	O	Inverting pin for 100 Ω differential driver output. Channel 4.
TX4P	43	O	Non-inverting pin for 100 Ω differential driver output. Channel 4.
TX5N	39	O	Inverting pin for 100 Ω differential driver output. Channel 5.
TX5P	40	O	Non-inverting pin for 100 Ω differential driver output. Channel 5.

Copyright © 2022 Texas Instruments Incorporated

Table 5-1. Pin Functions (continued)

PIN		TYPE[(1)]	DESCRIPTION
NAME	NO.		
TX6N	36	O	Inverting pin for 100 Ω differential driver output. Channel 6.
TX6P	37	O	Non-inverting pin for 100 Ω differential driver output. Channel 6.
TX7N	33	O	Inverting pin for 100 Ω differential driver output. Channel 7.
TX7P	34	O	Non-inverting pin for 100 Ω differential driver output. Channel 7.
VCC	6, 18, 38, 50	P	Power supply pins. VCC = 3.3 V ±10%. The VCC pins on this device should be connected through a low-resistance path to the board VCC plane. Install a decoupling capacitor to GND near each VCC pin.
RSVD2, 3, 4, 5	3, 15, 35, 47	—	Reserved pins – for best signal integrity performance connect the pins to GND. Alternate option would be 0 Ω resistors from pins to GND.

(1) I = input, O = output, P = power

Copyright © 2022 Texas Instruments Incorporated

6 Specifications

6.1 Absolute Maximum Ratings

over operating free-air temperature range (unless otherwise noted)[(1)]

		MIN	MAX	UNIT
VCC_{ABSMAX}	Supply Voltage (VCC)	–0.5	4.0	V
$VIO_{CMOS,ABSMAX}$	3.3 V LVCMOS and Open Drain I/O voltage	–0.5	4.0	V
$VIO_{5LVL,ABSMAX}$	5-level Input I/O voltage	–0.5	2.75	V
$VIO_{HS-RX,ABSMAX}$	High-speed I/O voltage (RXnP, RXnN)	–0.5	3.2	V
$VIO_{HS-TX,ABSMAX}$	High-speed I/O voltage (TXnP, TXnN)	–0.5	2.75	V
$T_{J,ABSMAX}$	Junction temperature		150	°C
T_{stg}	Storage temperature range	–65	150	°C

(1) Operation outside the Absolute Maximum Ratings may cause permanent device damage. Absolute maximum ratings do not imply functional operation of the device at these or any other conditions beyond those listed under Recommended Operating Conditions. If briefly operating outside the Recommended Operating Conditions but within the Absolute Maximum Ratings, the device may not sustain damage, but it may not be fully functional. Operating the device in this manner may affect device reliability, functionality, performance, and shorten the device lifetime.

6.2 ESD Ratings

			VALUE	UNIT
$V_{(ESD)}$	Electrostatic discharge	Human body model (HBM), per ANSI/ESDA/JEDEC JS-001[(1)]	±2000	V
		Charged device model (CDM), per ANSI/ESDA/JEDEC JS-002[(2)]	±500	

(1) JEDEC document JEP155 states that 500-V HBM allows safe manufacturing with a standard ESD control process. Pins listed as ±2 kV may actually have higher performance.
(2) JEDEC document JEP157 states that 250-V CDM allows safe manufacturing with a standard ESD control process.

6.3 Recommended Operating Conditions

over operating free-air temperature range (unless otherwise noted)

			MIN	NOM	MAX	UNIT
VCC	Supply voltage, VCC to GND	DC plus AC power should not exceed these limits	3.0	3.3	3.6	V
N_{VCC}	Supply noise tolerance	DC to <50 Hz, sinusoidal[1]			250	mVpp
		50 Hz to 500 kHz, sinusoidal[1]			100	mVpp
		500 kHz to 2.5 MHz, sinusoidal[1]			33	mVpp
		Supply noise, >2.5 MHz, sinusoidal[1]			10	mVpp
$T_{RampVCC}$	VCC supply ramp time	From 0 V to 3.0 V	0.150		100	ms
T_A	Operating ambient temperature		−40		85	°C
T_J	Operating junction temperature	All device modes			125	°C
PW_{LVCMOS}	Minimum pulse width required for the device to detect a valid signal on LVCMOS inputs	PD1/0, and READ_EN_N	200			µs
VCC_{SMBUS}	SMBus/I^2C SDA and SCL Open Drain Termination Voltage	Supply voltage for open drain pull-up resistor			3.6	V
F_{SMBus}	SMBus/I^2C clock (SCL) frequency in SMBus secondary mode		10		400	kHz
VID_{LAUNCH}	Source differential launch amplitude		800		1200	mVpp
DR	Data rate		1		32	Gbps

6.4 Thermal Information

THERMAL METRIC[1]		DS320PR810 NJX, 64 Pins	UNIT
$R_{\theta JA\text{-High K}}$	Junction-to-ambient thermal resistance	22.9	°C/W
$R_{\theta JC(top)}$	Junction-to-case (top) thermal resistance	9.6	°C/W
$R_{\theta JB}$	Junction-to-board thermal resistance	7.2	°C/W
ψ_{JT}	Junction-to-top characterization parameter	1.8	°C/W
ψ_{JB}	Junction-to-board characterization parameter	7.1	°C/W
$R_{\theta JC(bot)}$	Junction-to-case (bottom) thermal resistance	2.5	°C/W

(1) For more information about traditional and new thermal metrics, see the *IC Package Thermal Metrics* application report.

6.5 DC Electrical Characteristics

over operating free-air temperature and voltage range (unless otherwise noted)

PARAMETER		TEST CONDITIONS	MIN	TYP	MAX	UNIT
Power						
P_{ACT}	Device active power	8 channels active, EQ = 0-2		1.15	1.42	W
		8 channels active, EQ = 5-19		1.41	1.75	W
P_{RXDET}	Device power consumption while waiting for far end receiver terminations	All channels enabled but no far end receiver detected		166		mW
P_{STBY}	Device power consumption in standby power mode	All channels disabled (PD1,0 = H)		23		mW
Control IO						
V_{IH}	High level input voltage	SDA, SCL, PD1, PD0, READ_EN_N pins	2.1			V
V_{IL}	Low level input voltage	SDA, SCL, PD1, PD0, READ_EN_N pins			1.08	V
V_{OH}	High level output voltage	$R_{pull\text{-}up}$ = 4.7 kΩ (SDA, SCL, ALL_DONE_N pins)	2.1			V
V_{OL}	Low level output voltage	I_{OL} = –4 mA (SDA, SCL, ALL_DONE_N pins)			0.4	V
I_{IH}	Input high leakage current	V_{Input} = VCC, (SCL, SDA, PD1, PD0, READ_EN_N pins)			10	µA
I_{IL}	Input low leakage current	V_{Input} = 0 V, (SCL, SDA, PD1, PD0, READ_EN_N pins)	−10			µA
$I_{IH,FS}$	Input high leakage current for fail safe input pins	V_{Input} = 3.6 V, VCC = 0 V, (SCL, SDA, , PD1, PD0, READ_EN_N pins)			200	µA
$C_{IN\text{-}CTRL}$	Input capacitance	SDA, SCL, PD1, PD0, READ_EN_Npins		1.6		pF
5 Level IOs (MODE, GAIN0, GAIN1, EQ0_0, EQ1_0, EQ0_1, EQ1_1, RX_DET pins)						
I_{IH_5L}	Input high leakage current, 5-level IOs	VIN = 2.5 V			10	µA
I_{IL_5L}	Input low leakage current for all 5-level IOs except MODE.	VIN = GND	−10			µA
$I_{IL_5L,MODE}$	Input low leakage current for MODE pin	VIN = GND	−200			µA
Receiver						
$V_{RX\text{-}DC\text{-}CM}$	RX DC Common Mode Voltage	Device is in active or standby state		1.4		V
$Z_{RX\text{-}DC}$	Rx DC Single-Ended Impedance			50		Ω
$Z_{RX\text{-}HIGH\text{-}IMP\text{-}DC\text{-}POS}$	DC input CM input impedance during Reset or power-down	Inputs are at $V_{RX\text{-}DC\text{-}CM}$ voltage	15			kΩ
Transmitter						

Copyright © 2022 Texas Instruments Incorporated

6.5 DC Electrical Characteristics (continued)

over operating free-air temperature and voltage range (unless otherwise noted)

PARAMETER		TEST CONDITIONS	MIN	TYP	MAX	UNIT
$Z_{TX\text{-}DIFF\text{-}DC}$	DC Differential Tx Impedance	Impedance of Tx during active signaling, VID,diff = 1 Vpp		100		Ω
$V_{TX\text{-}DC\text{-}CM}$	Tx DC common mode Voltage			1.0		V
$I_{TX\text{-}SHORT}$	Tx Short Circuit Current	Total current the Tx can supply when shorted to GND		70		mA

6.6 High Speed Electrical Characteristics

over operating free-air temperature and voltage range (unless otherwise noted)

PARAMETER		TEST CONDITIONS	MIN	TYP	MAX	UNIT
Receiver						
$RL_{RX\text{-}DIFF}$	Input differential return loss	50 MHz to 1.25 GHz		−22		dB
		1.25 GHz to 2.5 GHz		−19		dB
		2.5 GHz to 4.0 GHz		−16		dB
		4.0 GHz to 8.0 GHz		−12		dB
		8.0 GHz to 16 GHz		−9		dB
$RL_{RX\text{-}CM}$	Input common-mode return loss	50 MHz to 2.5 GHz		−16		dB
		2.5 GHz to 8.0 GHz		−9		dB
		8.0 GHz to 16 GHz		−6		dB
XT_{RX}	Receiver-side pair-to-pair isolation; Port A or Port B	Minimum over 10 MHz to 16 GHz range		−40		dB
Transmitter						
$V_{TX\text{-}AC\text{-}CM\text{-}PP}$	Tx AC Peak-to-Peak Common Mode Voltage	Measured with lowest EQ, GAIN = L4; PRBS-7, 32 Gbps, over at least 10^6 bits using a bandpass-Pass Filter from 30 Khz - 500 Mhz			50	mVpp
$V_{TX\text{-}CM\text{-}DC\text{-}ACTIVE\text{-}IDLE\text{-}DELTA}$	Absolute Delta of DC Common Mode Voltage during L0 and Electrical Idle	$V_{TX\text{-}CM\text{-}DC} = \lvert V_{OUTn+} + V_{OUTn-}\rvert/2$, Measured by taking the absolute difference of $V_{TX\text{-}CM\text{-}DC}$ during PCIe state L0 and Electrical Idle	0		120	mV
$V_{TX\text{-}RCV\text{-}DETECT}$	Amount of Voltage change allowed during Receiver Detection	Measured while Tx is sensing whether a low-impedance Receiver is present. No load is connected to the driver output	0		600	mV
$RL_{TX\text{-}DIFF}$	Output differential return loss	50 MHz to 1.25 GHz		−22		dB
		1.25 GHz to 2.5 GHz		−21		dB
		2.5 GHz to 4.0 GHz		−19		dB
		4.0 GHz to 8.0 GHz		−14		dB
		8.0 Ghz to 16 Ghz		−10		dB
$RL_{TX\text{-}CM}$	Output Common-mode return loss	50 MHz to 2.5 GHz		−14		dB
		2.5 GHz to 8.0 GHz		−10		dB
		8.0 GHz to 16 GHz		−7		dB
XT_{TX}	Transmit-side pair-to-pair isolation	Minimum over 10 MHz to 16 GHz range		−40		dB
Device Datapath						
$T_{PLHD/PHLD}$	Input-to-output latency (propagation delay) through a data channel	For either Low-to-High or High-to-Low transition.		100	140	ps
$L_{TX\text{-}SKEW}$	Lane-to-Lane Output Skew	Between any two lanes within a single transmitter.			20	ps

Copyright © 2022 Texas Instruments Incorporated

6.6 High Speed Electrical Characteristics (continued)

over operating free-air temperature and voltage range (unless otherwise noted)

PARAMETER		TEST CONDITIONS	MIN	TYP	MAX	UNIT
$T_{RJ\text{-}DATA}$	Additive Random Jitter with data	Jitter through redriver minus the calibration trace. 32 Gbps PRBS15. 800 mVpp-diff input swing.		75		fs
$T_{RJ\text{-}INTRINSIC}$	Intrinsic additive Random Jitter with clock	Jitter through redriver minus the calibration trace. 16 Ghz CK. 800 mVpp-diff input swing.		40		fs
$JITTER_{TOTAL\text{-}DATA}$	Additive Total Jitter with data	Jitter through redriver minus the calibration trace. 32 Gbps PRBS15. 800 mVpp-diff input swing.		1.5		ps
$JITTER_{TOTAL\text{-}INTRINSIC}$	Intrinsic additive Total Jitter with clock	Jitter through redriver minus the calibration trace. 16 Ghz CK. 800 mVpp-diff input swing.		1.7		ps
FLAT-GAIN	Broadband DC and AC flat gain - input to output, measured at DC	Minimum EQ, GAIN1/0 = L0		−5.6		dB
		Minimum EQ, GAIN1/0 = L1		−3.8		dB
		Minimum EQ, GAIN1/0 = L2		−1.2		dB
		Minimum EQ, GAIN1/0 = L3		2.6		dB
		Minimum EQ, GAIN1/0 = L4 (Float)		0.6		dB
$EQ\text{-}MAX_{16G}$	EQ boost at max setting (EQ INDEX = 19)	AC gain at 16 GHz relative to gain at 100 MHz.		22		dB
$FLAT\text{-}GAIN_{VAR}$	Flat gain variation across PVT measured at DC	GAIN1/0 = L4, minimum EQ setting. Max-Min.	−2.5		1.5	dB
$EQ\text{-}GAIN_{VAR}$	EQ boost variation across PVT	At 16 Ghz. GAIN1/0 = L4, maximum EQ setting. Max-Min.	−3.0		4.0	dB
LINEARITY-DC	Output DC Linearity	at GAIN1/0 = L4		1700		mVpp
LINEARITY-AC	Output AC Linearity at 32Gbps	at GAIN1/0 = L4		700		mVpp

6.7 SMBUS/I²C Timing Charateristics

over operating free-air temperature range (unless otherwise noted)

PARAMETER		TEST CONDITIONS	MIN	TYP	MAX	UNIT
Secondary Mode						
t_{SP}	Pulse width of spikes which must be suppressed by the input filter				50	ns
$t_{HD\text{-}STA}$	Hold time (repeated) START condition. After this period, the first clock pulse is generated		0.6			µs
t_{LOW}	LOW period of the SCL clock		1.3			µs
T_{HIGH}	HIGH period of the SCL clock		0.6			µs
$t_{SU\text{-}STA}$	Set-up time for a repeated START condition		0.6			µs
$t_{HD\text{-}DAT}$	Data hold time		0			µs
$T_{SU\text{-}DAT}$	Data setup time		0.1			µs
t_r	Rise time of both SDA and SCL signals	Pull-up resistor = 4.7 kΩ, Cb = 10 pF		120		ns
t_f	Fall time of both SDA and SCL signals	Pull-up resistor = 4.7 kΩ, Cb = 10 pF		2		ns
$t_{SU\text{-}STO}$	Set-up time for STOP condition		0.6			µs
t_{BUF}	Bus free time between a STOP and START condition		1.3			µs
$t_{VD\text{-}DAT}$	Data valid time				0.9	µs

Copyright © 2022 Texas Instruments Incorporated

6.7 SMBUS/I²C Timing Charateristics (continued)

over operating free-air temperature range (unless otherwise noted)

PARAMETER		TEST CONDITIONS	MIN	TYP	MAX	UNIT
t_{VD-ACK}	Data valid acknowledge time				0.9	µs
C_b	Capacitive load for each bus line				400	pF
Primary Mode						
f_{SCL-M}	SCL clock frequency			303		kHz
t_{LOW-M}	SCL low period			1.90		µs
T_{HIGH-M}	SCL high period			1.40		µs
$t_{SU-STA-M}$	Set-up time for a repeated START condition			2		µs
$t_{HD-STA-M}$	Hold time (repeated) START condition. After this period, the first clock pulse is generated			1.5		µs
$T_{SU-DAT-M}$	Data setup time			1.4		µs
$t_{HD-DAT-M}$	Data hold time			0.5		µs
t_{R-M}	Rise time of both SDA and SCL signals	Pull-up resistor = 4.7 kΩ, Cb = 10 pF		120		ns
T_{F-M}	Fall time of both SDA and SCL signals	Pull-up resistor = 4.7 kΩ, Cb = 10 pF		2		ns
$t_{SU-STO-M}$	Stop condition setup time			1.5		µs
EEPROM Timing						
T_{EEPROM}	EEPROM configuration load time	Time to assert ALL_DONE_N after READ_EN_N has been asserted.		7.5		ms
T_{POR}	Time to first SMBus access	Power supply stable after initial ramp. Includes initial power-on reset time.		50		ms

Copyright © 2022 Texas Instruments Incorporated

6.8 Typical Characteristics

Figure 6-1 shows typical EQ gain curves versus frequency for different EQ settings. Figure 6-2 shows EQ gain variation over temperature for maximum EQ setting of 19. Figure 6-3 shows typical differential return loss for Rx and Tx pins.

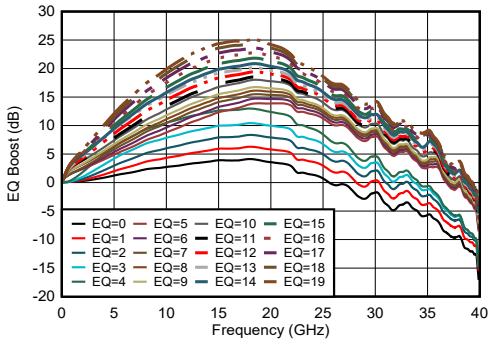

Figure 6-1. Typical EQ Boost vs Frequency

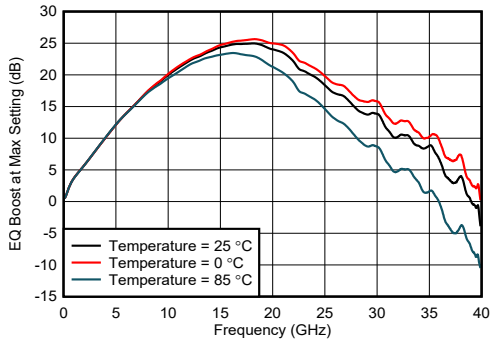

Figure 6-2. Typical EQ Boost vs Frequency at Different Temperature with EQ=19

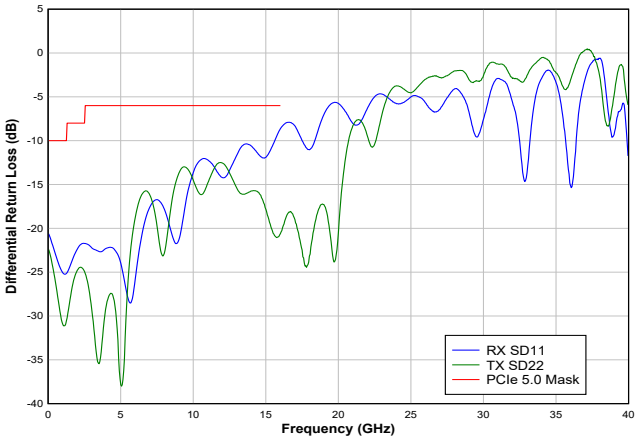

Figure 6-3. Typical Differential Return Loss

Copyright © 2022 Texas Instruments Incorporated

6.9 Typical Jitter Characteristics

Figure 6-4 , Figure 6-5, and Figure 6-6 show eye diagrams at BERT source output, through calibration traces, and through 810 respectively. Note: 810 adds little to no random jitter. Residual equalization of ≅4 dB at EQ = 0 setting results in slightly lower deterministic jitter through DUT compared to baseline setup with 7 dB loss.

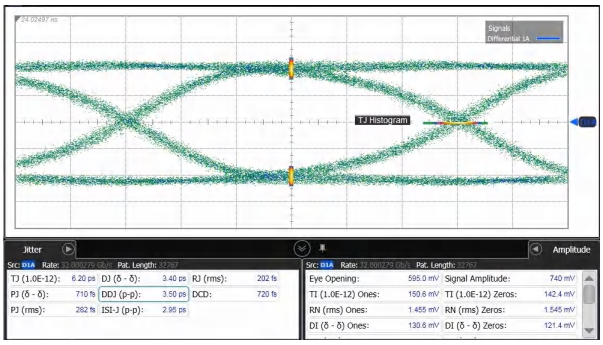

Figure 6-4. At BERT Source Output (1 dB Loss)

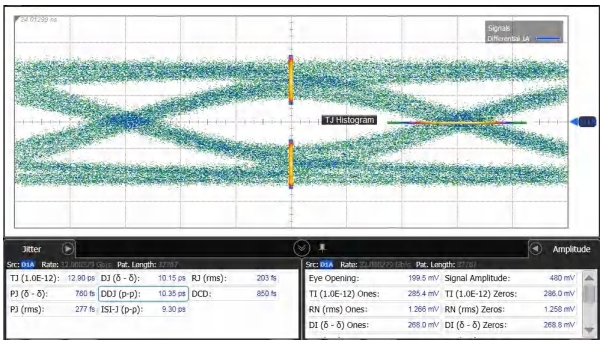

Figure 6-5. Through Baseline Calibration Trace Setup (7 dB Loss)

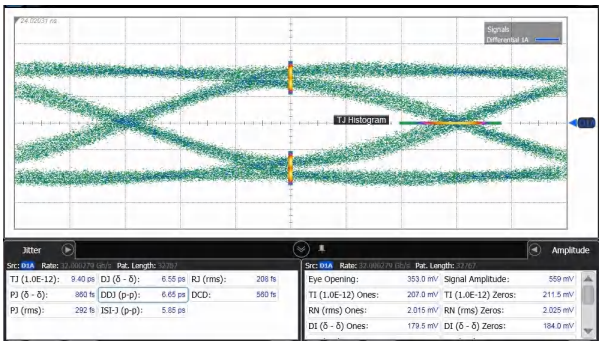

Figure 6-6. Through DS320PR810 (7 dB Loss and DUT EQ = 0)

7 Detailed Description

7.1 Overview

The DS320PR810 is an eight-channel multi-rate linear repeater with integrated signal conditioning. The device's signal channels operate independently from one another. Each channel includes a continuous-time linear equalizer (CTLE) and a linear output driver, which together compensate for a lossy transmission channel between the source transmitter and the final receiver. The linearity of the data path is specifically designed to preserve any transmit equalization while keeping receiver equalization effective.

The DS320PR810 can be configured three different ways:

Pin mode – device control configuration is done solely by strap pins. Pin mode is expected to be good enough for many system implementation needs.

SMBus/I^{2}C Primary mode – device control configuration is read from external EEPROM. When the DS320PR810 has finished reading from the EEPROM successfully, it will drive the ALL_DONE_N pin LOW. SMBus/I^{2}C secondary operation is available in this mode before, during, or after EEPROM reading. Note: during EEPROM reading, if the external SMBus/I^{2}C primary wants to access DS320PR810 registers, then it must support arbitration. The mode is preferred when software implementation is not desired.

SMBus/I^{2}C Secondary mode – provides most flexibility. Requires a SMBus/I^{2}C primary device to configure DS320PR810 though writing to its secondary address.

7.2 Functional Block Diagram

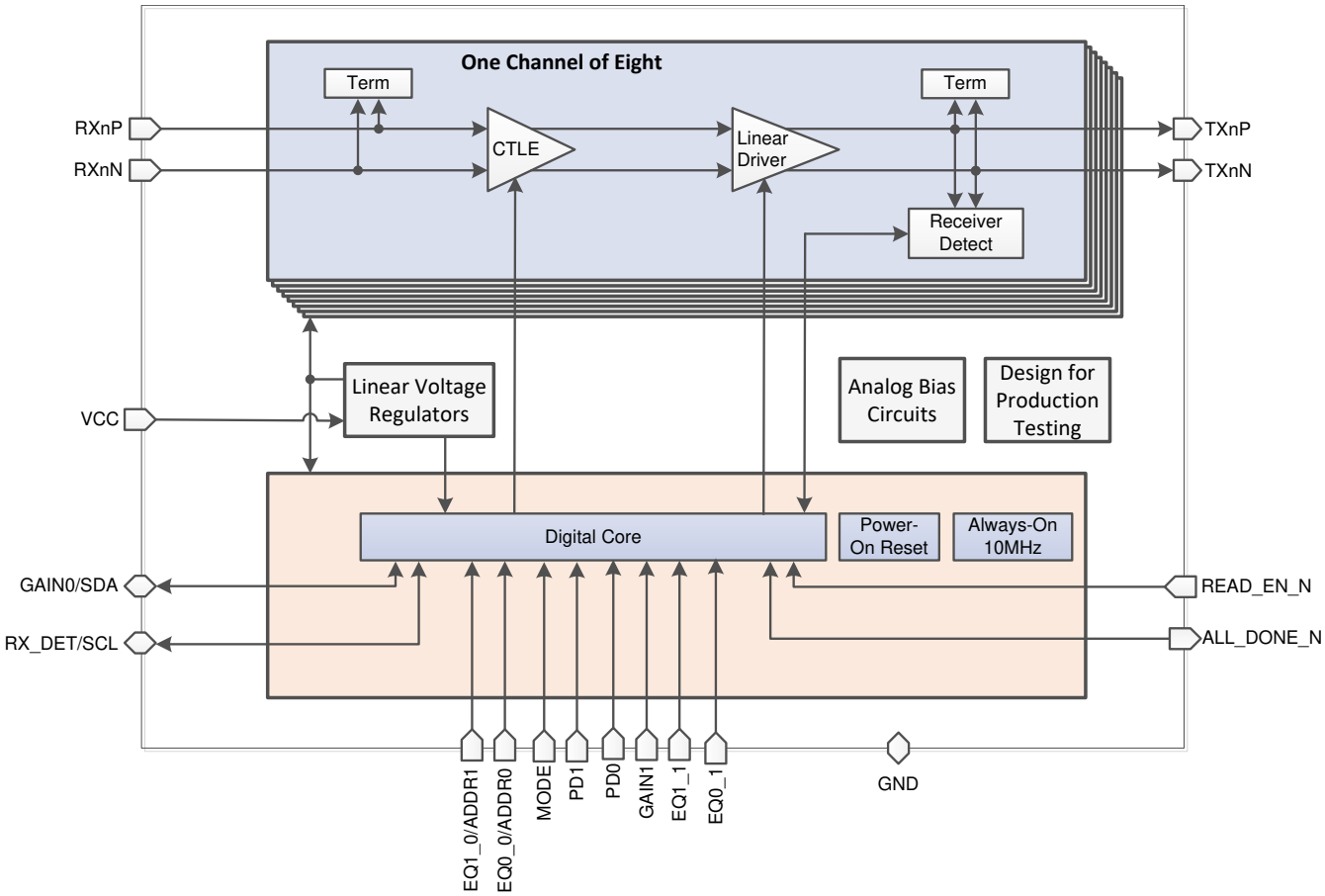

Copyright © 2022 Texas Instruments Incorporated

7.3 Feature Description

7.3.1 Linear Equalization

The DS320PR810 receivers feature a continuous-time linear equalizer (CTLE) that applies high-frequency boost and low-frequency attenuation to help equalize the frequency-dependent insertion loss effects of the passive channel. The receivers implement two stage linear equalizer for wide range of equalization capability. The equalizer stages also provide flexibility to make subtle modifications of mid-frequency boost for best EQ gain profile match with wide range of channel media characteristics. The EQ profile control feature is only available in SMBus/I^{2}C mode. In Pin mode the settings are optimized for FR4 traces.

Table 7-1 provides available equalization boost through EQ control pins or SMBus/I^{2}C registers. In Pin Control mode EQ1_0 and EQ0_0 pins set equalization boost for channels 0-3 (Bank 0) and EQ1_1 and EQ0_1 for channels 4-7 (Bank 1). In I^{2}C mode individual channels can be independently programmed for EQ boost.

Table 7-1. Equalization Control Settings

EQUALIZATION SETTING							TYPICAL EQ BOOST (dB)	
EQ INDEX	Pin mode		SMBus/I^{2}C Mode				at 8 GHz	at 16 GHz
	EQ1_0/1	EQ0_0/1	eq_stage1_3:0	eq_stage2_2:0	eq_profile_3:0	eq_stage1_bypass		
0	L0	L0	0	0	0	1	3.0	4.0
1	L0	L1	1	0	0	1	4.0	6.0
2	L0	L2	3	0	0	1	5.5	8.0
5	L1	L0	0	0	1	0	6.5	10.5
6	L1	L1	1	0	1	0	7.0	11.5
7	L1	L2	2	0	1	0	7.5	12.5
8	L1	L3	3	0	3	0	8.5	13.0
9	L1	L4	4	0	3	0	9.0	14.0
10	L2	L0	5	1	7	0	10.0	15.0
11	L2	L1	6	1	7	0	10.5	15.5
12	L2	L2	8	1	7	0	11.0	16.5
13	L2	L3	10	1	7	0	12.0	17.0
14	L2	L4	10	2	15	0	12.5	18.0
15	L3	L0	11	3	15	0	13.0	19.0
16	L3	L1	12	4	15	0	14.0	19.5
17	L3	L2	13	5	15	0	14.5	20.5
18	L3	L3	14	6	15	0	15.5	21.0
19	L3	L4	15	7	15	0	16.0	22.0

7.3.2 Flat-Gain

The GAIN1 and GAIN0 pins can be used to set the overall data-path flat gain (DC and AC) of the DS320PR810 when the device is in Pin mode. The pin GAIN0 sets the Flat-Gain for channels 0-3 (Bank 0) and GAIN1 sets the same for channels 4-7 (Bank 1). In I^{2}C mode each channel can be independently set. Table 7-2 provides flat gain control configuration settings. In the default recommendation for most systems will be GAIN1,0 = L4 (float) that provides flat gain of 0 dB.

The flat-gain and equalization of the DS320PR810 must be set such that the output signal swing at DC and high frequency does not exceed the DC and AC linearity ranges of the devices, respectively.

Table 7-2. Flat Gain Configuration Settings

Pin mode GAIN0/1	I²C Modeflat_gain_2:0	Flat Gain
L0	0	-6 dB
L1	1	-4 dB
L2	3	-2 dB
L4 (float)	5	0 dB (default recommendation)
L3	7	+2 dB

7.3.3 Receiver Detect State Machine

The DS320PR810 deploys an Rx detect state machine that governs the Rx detection cycle as defined in the PCI express specifications. At power up or after a manual PD0/1 toggle the redriver determines whether or not a valid PCI express termination is present at the far end receiver. The RX_DET pin of DS320PR810 provides additional flexibility for system designers to appropriately set the device in desired mode as provided in Table 7-3. PD0 and PD1 pins impact channel groups 0-3 and 4-7 respectively. If all eight channels of DS320PR810 is used for a same PCI express link, then the PD1 and PD0 pins can be shorted and driven together. For most applications the RX_DET pin can be left floating for default settings. In SMBus/I²C mode each channel can be configured independently.

Table 7-3. Receiver Detect State Machine Settings

PD0	PD1	RX_DET	Channels 0-3 Rx Common-mode Impedance	Channels 4-7 Rx Common-mode Impedance	COMMENTS
L	L	L0	Always 50 Ω	Always 50 Ω	PCI Express Rx detection state machine is disabled. Recommended for non PCIe interface use case where the DS320PR810 is used as buffer with equalization.
L	L	L1	Pre Detect: Hi-Z Post Detect: 50 Ω.	Pre Detect: Hi-Z Post Detect: 50 Ω.	Outputs polls until 3 consecutive valid detections
L	L	L2	Pre Detect: Hi-Z Post Detect: 50 Ω.	Pre Detect: Hi-Z Post Detect: 50 Ω.	Outputs polls until 2 consecutive valid detections
L	L	L3	NA	NA	Reserved
L	L	L4 (Float)	Pre Detect: Hi-Z Post Detect: 50 Ω.	Pre Detect: Hi-Z Post Detect: 50 Ω.	Tx polls every ≅150 µs until valid termination is detected. Rx CM impedance held at Hi-Z until detection Reset by asserting PD0/1 high for 200 µs then low.
H	L	X	Hi-Z	Pre Detect: Hi-Z Post Detect: 50 Ω.	Reset Channels 0-3 signal path and set their Rx impedance to Hi-Z
L	H	X	Pre Detect: Hi-Z Post Detect: 50 Ω.	Hi-Z	Reset Channels 4-7 signal path and set their Rx impedance to Hi-Z.
H	H	X	Hi-Z	Hi-Z	

In PCIe applications PD0/1 pins can be connected to PCIe sideband signals PERST# with inverted polarity or one or more appropriate PRSNTx# signals to achieve desired RX detect functionality.

7.4 Device Functional Modes

7.4.1 Active PCIe Mode

The device is in normal operation with PCIe state machine enabled by RX_DET = L1/L2/L4. In this mode PD0 and PD1 pins are driven low in a system (for example, by PCIE connector *PRSNTx#* or fundamental reset *PERST#* signal). In this mode, the DS320PR810 redrives and equalizes PCIe Rx or Tx signals to provide better signal integrity.

Copyright © 2022 Texas Instruments Incorporated

7.4.2 Active Buffer Mode

The device is in normal operation with PCIe state machine disabled by RX_DET = L0. This mode is recommended for non-PCIe use cases. In this mode the device is working as a buffer to provide linear equalization to improve signal integrity.

7.4.3 Standby Mode

The device is in standby mode invoked by PD1,0 = H. In this mode, the device is in standby mode conserving power.

7.5 Programming

7.5.1 Pin mode

The DS320PR810 can be fully configured through pin-strap pins. In this mode the device uses 2-level and 5-level pins for device control and signal integrity optimum settings.

7.5.1.1 Five-Level Control Inputs

The DS320PR810 has eight (EQ0_0, EQ1_0, EQ0_1, EQ1_1, GAIN0, GAIN1, MODE, and RX_DET) 5-level input pins that are used to control the configuration of the device. These 5-level inputs use a resistor divider to help set the 5 valid levels and provide a wider range of control settings. External resistors must be of 10% tolerance or better. The EQ0_0, EQ1_0, EQ0_1, EQ1_1, GAIN0, GAIN1, and RX_DET pins are sampled at power-up only. The MODE pin can be exercised at device power up or in normal operation mode.

Table 7-4. 5-level Control Pin Settings

LEVEL	SETTING
L0	1 kΩ to GND
L1	8.25 kΩ to GND
L2	24.9 kΩ to GND
L3	75 kΩ to GND
L4	F (Float)

7.5.2 SMBUS/I^{2}C Register Control Interface

If MODE = L2 (SMBus/I^{2}C Secondary control mode), then the DS320PR810 is configured through a standard I^{2}C or SMBus interface that may operate up to 400 kHz. The secondary address of the DS320PR810 is determined by the pin strap settings on the ADDR1 and ADDR0 pins. Note: secondary addresses to access channels 0-3 (Bank 0) and channels 4-7 (Bank 1) are different. Channel Bank 1 has address which is Channel Bank 0 address +1. The sixteen possible secondary addresses for each channel bank of the DS320PR810 are provided in Table 7-5. In SMBus/I^{2}C modes the SCL and SDA pins must be pulled up to a 3.3 V supply with a pull-up resistor. The value of the resistor depends on total bus capacitance. 4.7 kΩ is a good first approximation for a bus capacitance of 10 pF.

Table 7-5. SMBUS/I2C Secondary Address Settings

ADDR1	ADDR0	7-bit Secondary Address Channels 0-3 (Bank 0)	7-bit Secondary Address Channels 4-7 (Bank 1)
L0	L0	0x18	0x19
L0	L1	0x1A	0x1B
L0	L2	0x1C	0x1D
L0	L3	0x1E	0x1F
L0	L4	Reserved	Reserved
L1	L0	0x20	0x21
L1	L1	0x22	0x23
L1	L2	0x24	0x25
L1	L3	0x26	0x27
L1	L4	Reserved	Reserved

Copyright © 2022 Texas Instruments Incorporated

Table 7-5. SMBUS/I2C Secondary Address Settings (continued)

ADDR1	ADDR0	7-bit Secondary Address Channels 0-3 (Bank 0)	7-bit Secondary Address Channels 4-7 (Bank 1)
L2	L0	0x28	0x29
L2	L1	0x2A	0x2B
L2	L2	0x2C	0x2D
L2	L3	0x2E	0x2F
L2	L4	Reserved	Reserved
L3	L0	0x30	0x31
L3	L1	0x32	0x33
L3	L2	0x34	0x35
L3	L3	0x36	0x37
L3	L4	Reserved	Reserved

The DS320PR810 has two types of registers:

- **Shared Registers:** these registers can be accessed at any time and are used for device-level configuration, status read back, control, or to read back the device ID information.
- **Channel Registers:** these registers are used to control and configure specific features for each individual channel. All channels have the same register set and can be configured independent of each other or configured as a group through broadcast writes to Bank 0 or Bank 1.

The DS320PR810 features two banks of channels, Bank 0 (Channels 0-3) and Bank 1 (Channels 4-7), each featuring a separate register set and requiring a unique SMBus secondary address.

Channel Registers Base Address	Channel Bank 0 Access	Channel Bank 1 Access
0x00	Channel 0 registers	Channel 4 registers
0x20	Channel 1 registers	Channel 5 registers
0x40	Channel 2 registers	Channel 6 registers
0x60	Channel 3 registers	Channel 7 registers
0x80	Broadcast write channel Bank 0 registers, read channel 0 registers	Broadcast write channel Bank 1 registers, read channel 4 registers
0xA0	Broadcast write channel 0-1 registers, read channel 0 registers	Broadcast write channel 4-5 registers, read channel 4 registers
0xC0	Broadcast write channel 2-3 registers, read channel 2 registers	Broadcast write channel 6-7 registers, read channel 6 registers
0xE0	Bank 0 Share registers	Bank 1 Share registers

7.5.2.1 Shared Registers

Table 7-6. General Registers (Offset = 0xE2)

Bit	Field	Type	Reset	Description
7	RESERVED	R	0x0	Reserved
6	rst_i2c_regs	R/W/SC	0x0	Device reset control: Reset all I^2C registers to default values (self-clearing).
5	rst_i2c_mas	R/W/SC	0x0	Reset I^2C Primary (self-clearing).
4-1	RESERVED	R	0x0	Reserved
0	frc_eeprm_rd	R/W/SC	0x0	Override MODE and READ_EN_N status to force manual EEPROM configuration load.

Copyright © 2022 Texas Instruments Incorporated

Table 7-7. EEPROM_Status Register (Offset = 0xE3)

Bit	Field	Type	Reset	Description
7	eecfg_cmplt	R	0x0	EEPROM load complete.
6	eecfg_fail	R	0x0	EEPROM load failed.
5	eecfg_atmpt_1	R	0x0	Number of attempts made to load EEPROM image.
4	eecfg_atmpt_0	R	0x0	see MSB
3	eecfg_cmplt	R	0x0	EEPROM load complete 2.
2	eecfg_fail	R	0x0	EEPROM load failed 2.
1	eecfg_atmpt_1	R	0x0	Number of attempts made to load EEPROM image 2.
0	eecfg_atmpt_0	R	0x0	see MSB

Table 7-8. DEVICE_ID0 Register (Offset = 0xF0)

Bit	Field	Type	Reset	Description
7-4	RESERVED	R	0x0	Reserved
3	device_id0_3	R	0x0	Device ID0 [3:1]: 011
2	device_id0_2	R	0x1	see MSB
1	device_id0_1	R	0x1	see MSB
0	RESERVED	R	X	Reserved

Table 7-9. *DEVICE_ID1 Register (Offset = 0xF1)*

Bit	Field	Type	Reset	Description
7	device_id[7]	R	0x0	Device ID 0010 1001: DS320PR810
6	device_id[6]	R	0x0	see MSB
5	device_id[5]	R	0x1	see MSB
4	device_id[4]	R	0x0	see MSB
3	device_id[3]	R	0x1	see MSB
2	device_id[2]	R	0x0	see MSB
1	device_id[1]	R	0x0	see MSB
0	device_id[0]	R	0x0	see MSB

7.5.2.2 Channel Registers

Table 7-10. RX Detect Status Register (Channel register base + Offset = 0x00)

Bit	Field	Type	Reset	Description
7	rx_det_comp_p	R	0x0	Rx Detect positive data pin status: 0: Not detected 1: Detected – the value is latched
6	rx_det_comp_n	R	0x0	Rx Detect negative data pin status: 0: Not detected 1: Detected – the value is latched
5-0	RESERVED	R	0x0	Reserved

Table 7-11. EQ Gain Control Register (Channel register base + Offset = 0x01)

Bit	Field	Type	Reset	Description
7	eq_stage1_bypass	R/W	0x0	Enable EQ stage 1 bypass: 0: Bypass disabled 1: Bypass enabled

Copyright © 2022 Texas Instruments Incorporated

Table 7-11. EQ Gain Control Register (Channel register base + Offset = 0x01) (continued)

Bit	Field	Type	Reset	Description
6	eq_stage1_3	R/W	0x0	EQBoost stage 1 control See Table 7-1 for details
5	eq_stage1_2	R/W	0x0	
4	eq_stage1_1	R/W	0x0	
3	eq_stage1_0	R/W	0x0	
2	eq_stage2_2	R/W	0x0	EQ Boost stage 2 control See Table 7-1 for details
1	eq_stage2_1	R/W	0x0	
0	eq_stage2_0	R/W	0x0	

Table 7-12. EQ Gain / Flat Gain Control Register (Channel register base + Offset = 0x03)

Bit	Field	Type	Reset	Description
7	RESERVED	R	0x0	Reserved
6	eq_profile_3	R/W	0x0	EQ mid-frequency boost profile See Table 7-1 for details
5	eq_profile_2	R/W	0x0	
4	eq_profile_1	R/W	0x0	
3	eq_profile_0	R/W	0x0	
2	flat_gain_2	R/W	0x1	Flat gain select: See Table 7-2 for details
1	flat_gain_1	R/W	0x0	
0	flat_gain_0	R/W	0x1	

Table 7-13. RX Detect Control Register (Channel register base + Offset = 0x04)

Bit	Field	Type	Reset	Description
7-3	RESERVED	R	0x0	Reserved
2	mr_rx_det_man	R/W	0x0	Manual override of rx_detect_p/n decision: 0: rx detect state machine is enabled 1: rx detect state machine is overridden – always valid RX termination detected
1	en_rx_det_count	R/W	0x0	Enable additional RX detect polling 0: Additional RX detect polling disabled 1: Additional RX detect polling enabled
0	sel_rx_det_count	R/W	0x0	Select number of valid RX detect polls – gated by en_rx_det_count = 1 0: Device transmitters poll until 2 consecutive valid detections 1: Device transmitters poll until 3 consecutive valid detections

Table 7-14. PD Override Register (Channel register base + Offset = 0x05)

Bit	Field	Type	Reset	Description
7	device_en_override	R/W	0x0	Enable power down overrides thorugh SMBus/I^2C 0: Manual override disabled 1: Manual override enabled
6-0	device_en	R/W	0x111111	Manual power down of redriver various blocks – gated by device_en_override = 1 111111: All blocks are enabled 000000: All blocks are disabled

Table 7-15. Bias Register (Channel register base + Offset = 0x06)

Bit	Field	Type	Reset	Description
5-3	Bias current	R/W	0x100	Control bias current Set 001 for best performance

Copyright © 2022 Texas Instruments Incorporated

Table 7-15. Bias Register (Channel register base + Offset = 0x06) (continued)

Bit	Field	Type	Reset	Description
7,6,2-0	Reserved	R/W	0x00000	Reserved

7.5.3 SMBus/I²C Primary Mode Configuration (EEPROM Self Load)

The DS320PR810 can also be configured by reading from EEPROM. To enter into this mode MODE pin must be set to L1. The EEPROM load operation only happens once after the device's initial power-up. If the DS320PR810 is configured for SMBus Primary mode, then it will remain in the SMBus IDLE state until the READ_EN_N pin is asserted to LOW. After the READ_EN_N pin is driven LOW, the DS320PR810 becomes an SMBus primary and attempts to self-configure by reading the device settings stored in an external EEPROM (SMBus 8-bit address 0xA0). When the DS320PR810 has finished reading from the EEPROM successfully, it will drive the ALL_DONE_N pin LOW. SMBus/I²C secondary operation is available in this mode before, during, or after EEPROM reading. Note: during EEPROM reading, if the external SMBus/I²C primary wants to access DS320PR810 registers, then it must support arbitration.

When designing a system for using the external EEPROM, the user must follow these specific guidelines:

- EEPROM size of 2 kb (256 × 8-bit) is recommended.
- Set MODE = L1, configure for SMBus Primary mode.
- The external EEPROM device address byte must be 0xA0 and capable of 400 kHz operation at 3.3 V supply
- In SMBus/I²C modes the SCL and SDA pins must be pulled up to a 3.3 V supply with a pull-up resistor. The value of the resistor depends on total bus capacitance. 4.7 kΩ is a good first approximation for a bus capacitance of 10 pF.

Figure 7-1 shows a use case with four DS320PR810 to implement a PCIe x16 configuration, but the user can cascade any number of DS320PR810 devices in a similar way. Tie the READ_EN_N pin of the first device low to automatically initiate EEPROM read at power up. Alternatively, the READ_EN_N pin of the first device can also be controlled by a micro-controller to initiate the EEPROM read manually. Leave the ALL_DONE_N pin of the final device floating, or connect the pin to a micro-controller input to monitor the completion of the final EEPROM read.

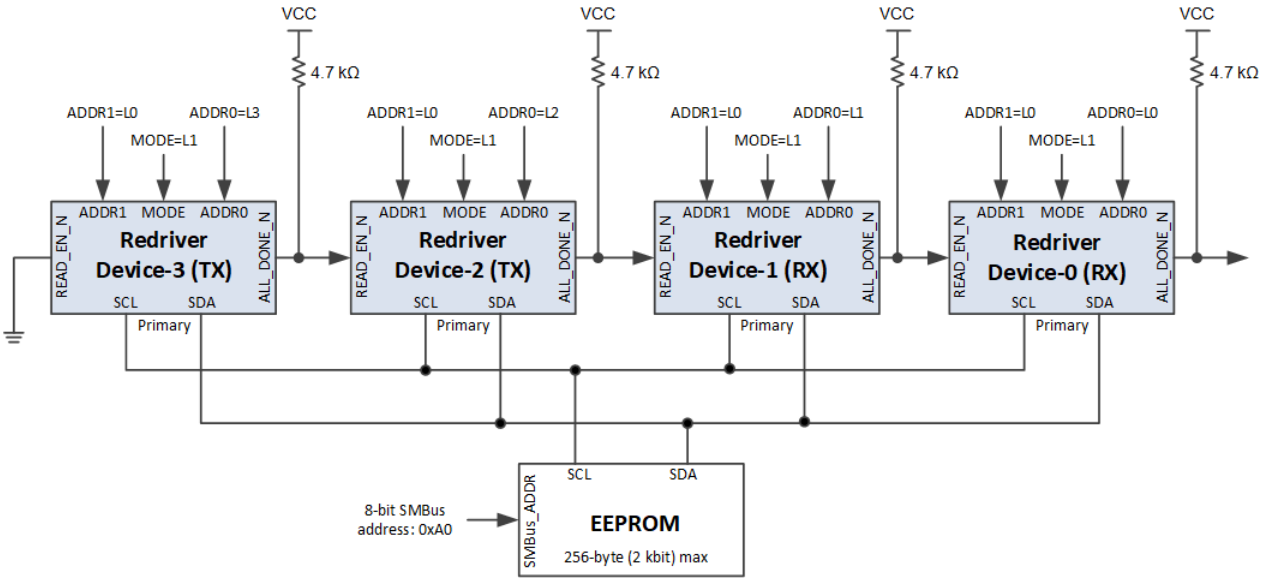

Figure 7-1. Daisy Chain Four DS320PR810 Devices to Read from Single EEPROM in x16 Configuration

8 Application and Implementation

Note

Information in the following applications sections is not part of the TI component specification, and TI does not warrant its accuracy or completeness. TI's customers are responsible for determining suitability of components for their purposes, as well as validating and testing their design implementation to confirm system functionality.

8.1 Application Information

The DS320PR810 is a high-speed linear repeater which extends the reach of differential channels impaired by loss from transmission media like PCBs and cables. It can be deployed in a variety of different systems. The following sections outline typical applications and their associated design considerations.

8.2 Typical Applications

The DS320PR810 is a PCI Express linear redriver that can also be configured as interface agnostic redriver by disabling its Rx detect feature. The device can be used in wide range of interfaces including:

- PCI Express 1.0, 2.0, 3.0, 4.0, and 5.0
- Ultra Path Interconnect (UPI) 1.0 and 2.0
- DisplayPort 2.0

The DS320PR810 is a protocol agnostic 8-channel 4-lane linear redriver with PCI Express receiver-detect capability. Its protocol agnostic nature allows it to be used in PCI Express x4, x8, and x16 applications. Figure 8-1 shows how a number of DS320PR810 devices can be used to obtain signal conditioning for PCI Express buses of varying widths.

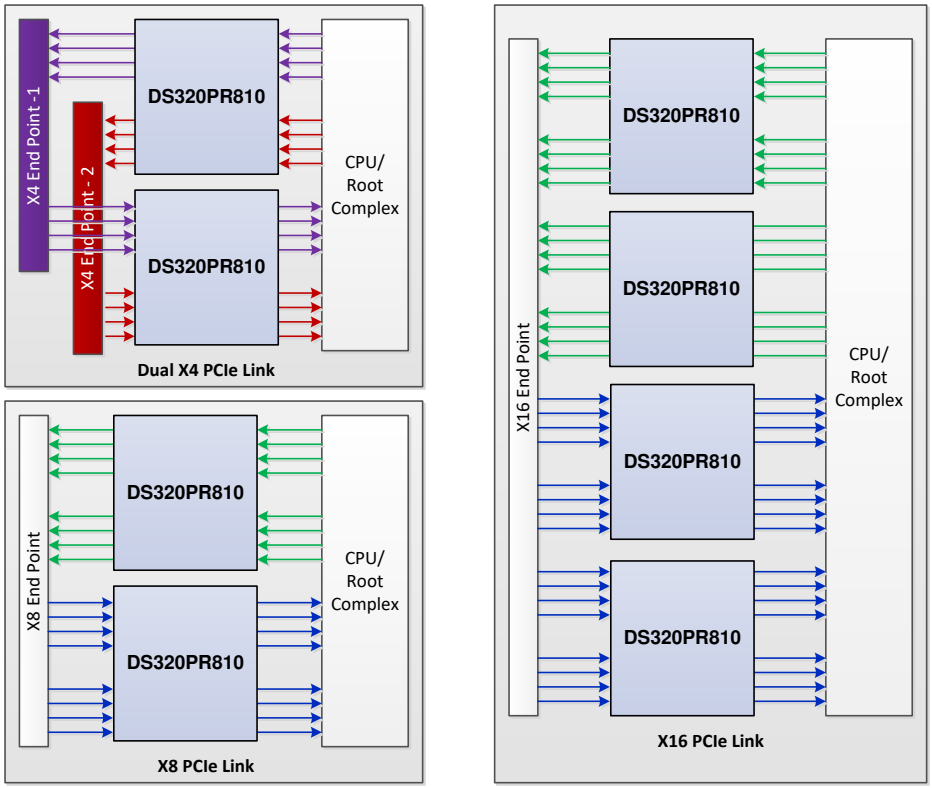

Figure 8-1. PCI Express x4, x8 and x16 Use Cases Using DS320PR 810

Copyright © 2022 Texas Instruments Incorporated

Note: all eight channels of the DS320PR810 flow in same direction. Therefore, if the device is used for dual x4 configuration with two devices, then PD0 of both devices need to be connected together to implement PCIe state machine for the first x4 link while PD1 for the second x4 link.

8.2.1 PCIe Reach Extension – x16 Lane Configuration

The DS320PR810 can be used in server or motherboard applications to boost transmit and receive signals to increase the reach of the host or root complex processor to PCI Express slots or connectors. The following sections outline detailed procedures and design requirements for a typical PCIe x16 lane configuration. However, the design recommendations can be used in any lane configuration.

8.2.1.1 Design Requirements

As with any high-speed design, there are many factors which influence the overall performance. The following list indicates critical areas for consideration during design.

- Use 85 Ω impedance traces when interfacing with PCIe CEM connectors. Length matching on the P and N traces should be done on the single-end segments of the differential pair.
- Use a uniform trace width and trace spacing for differential pairs.
- Place AC-coupling capacitors near the receiver end of each channel segment to minimize reflections.
- For PCIe Gen 3.0, 4.0, and 5.0, AC-coupling capacitors of 220 nF are recommended. Set the maximum body size to 0402 and add a cutout void on the GND plane below the landing pad of the capacitor to reduce parasitic capacitance to GND.
- Back-drill connector vias and signal vias to minimize stub length.
- Use reference plane vias to ensure a low inductance path for the return current.

8.2.1.2 Detailed Design Procedure

In PCIe Gen 3.0, 4.0, and 5.0 applications, the specification requires Rx-Tx (of root-complex and endpoint) link training to establish and optimize signal conditioning settings at 8 Gbps, 16 Gbps, and 32 Gbps, respectively. In link training, the Rx partner requests a series of FIR – preshoot and de-emphasis coefficients (10 Presets) from the Tx partner. The Rx partner includes 7-levels of CTLE followed by a single tap DFE. The link training would pre-condition the signal, with an equalized link between the root-complex and endpoint resulting an optimized link. Note that there is no link training in PCIe Gen 1.0 (2.5 Gbps) or PCIe Gen 2.0 (5.0 Gbps) applications.

For operation in Gen 3.0, 4.0, and 5.0 links, the DS320PR810 is designed with linear data-path to pass the Tx Preset signaling (by root complex and end point) onto the Rx (of root complex and end point) for the PCIe Gen 3.0, 4.0, or 5.0 link to train and optimize the equalization settings. The linear redriver DS320PR810 helps extend the PCB trace reach distance by boosting the attenuated signals with its equalization, which allows the user to recover the signal by the downstream Rx more easily. The device must be placed in between the Tx and Rx (of root complex and end point) such a way that both Rx and Tx signal swing stays within the linearity range of the device. Adjustments to the DS320PR810 EQ setting should be performed based on the channel loss to optimize the eye opening in the Rx partner. The available EQ gain settings are provided in Table 7-1. For most PCIe systems the default flat gain setting 0 dB (GAIN = floating) would be sufficient. However, a flat gain attenuation can be utilized to apply extra equalization when needed to keep the data-path linear.

The DS320PR810 can be optimized for a given system utilizing its three configuration modes – Pin mode, SMBus/I^2C Primary mode, and SMBus/I^2C Secondary mode. In SMBus/I^2C modes the SCL and SDA pins must be pulled up to a 3.3 V supply with a pull-up resistor. The value of the resistor depends on total bus capacitance. 4.7 kΩ is a good first approximation for a bus capacitance of 10 pF.

In PCIe applications PD0/1 pins can be connected to PCIe sideband signals PERST# with inverted polarity or one or more appropriate PRSNTx# signals to achieve desired RX detect functionality.

Figure 8-2 shows a simplified schematic for x16 lane configuration in Pin mode.

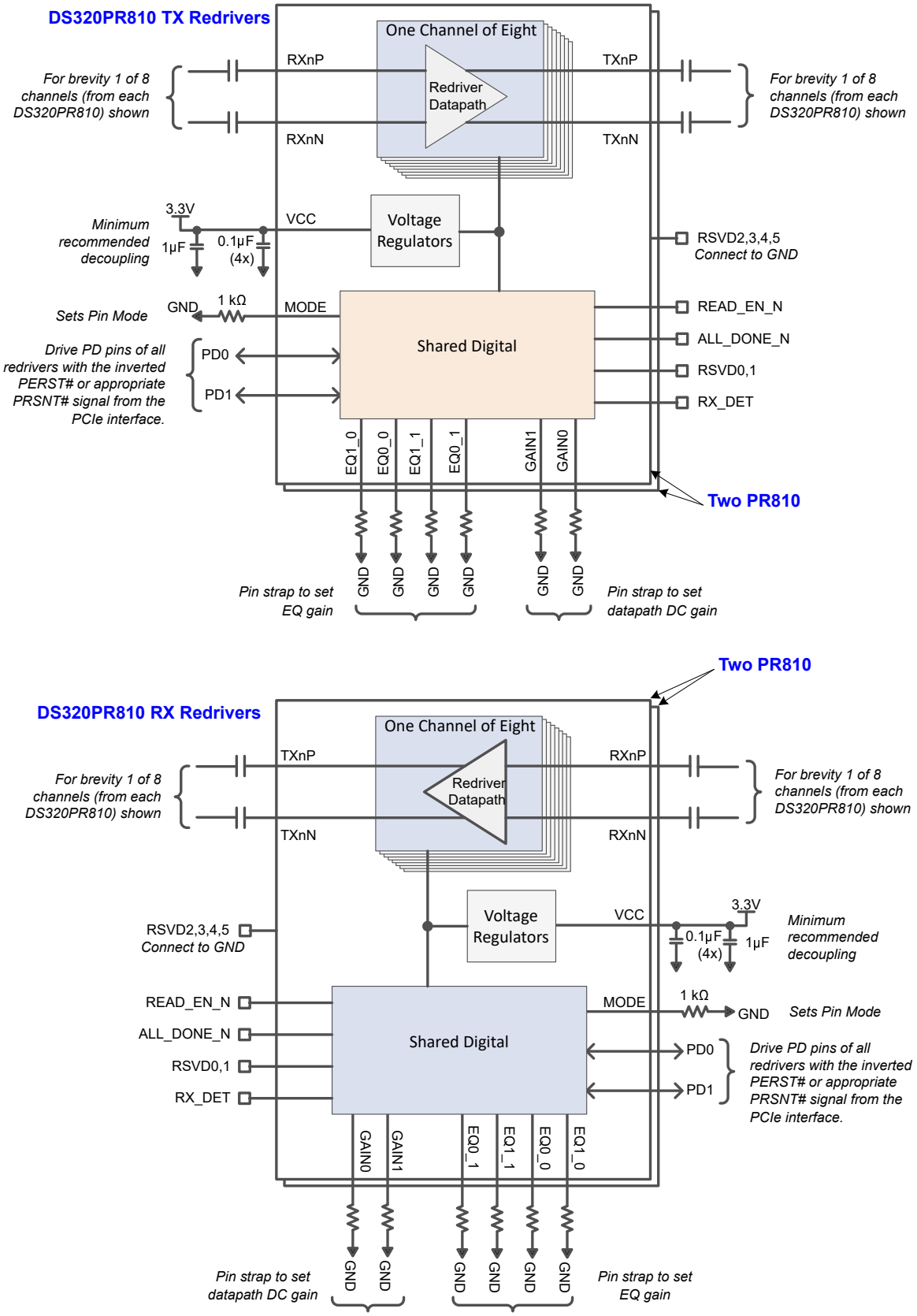

Figure 8-2. Simplified Schematic for PCIe x16 Lane Configuration in Pin mode

Copyright © 2022 Texas Instruments Incorporated

Figure 8-3 shows a simplified schematic for x16 lane configuration in SMBus/I²C Primary mode.

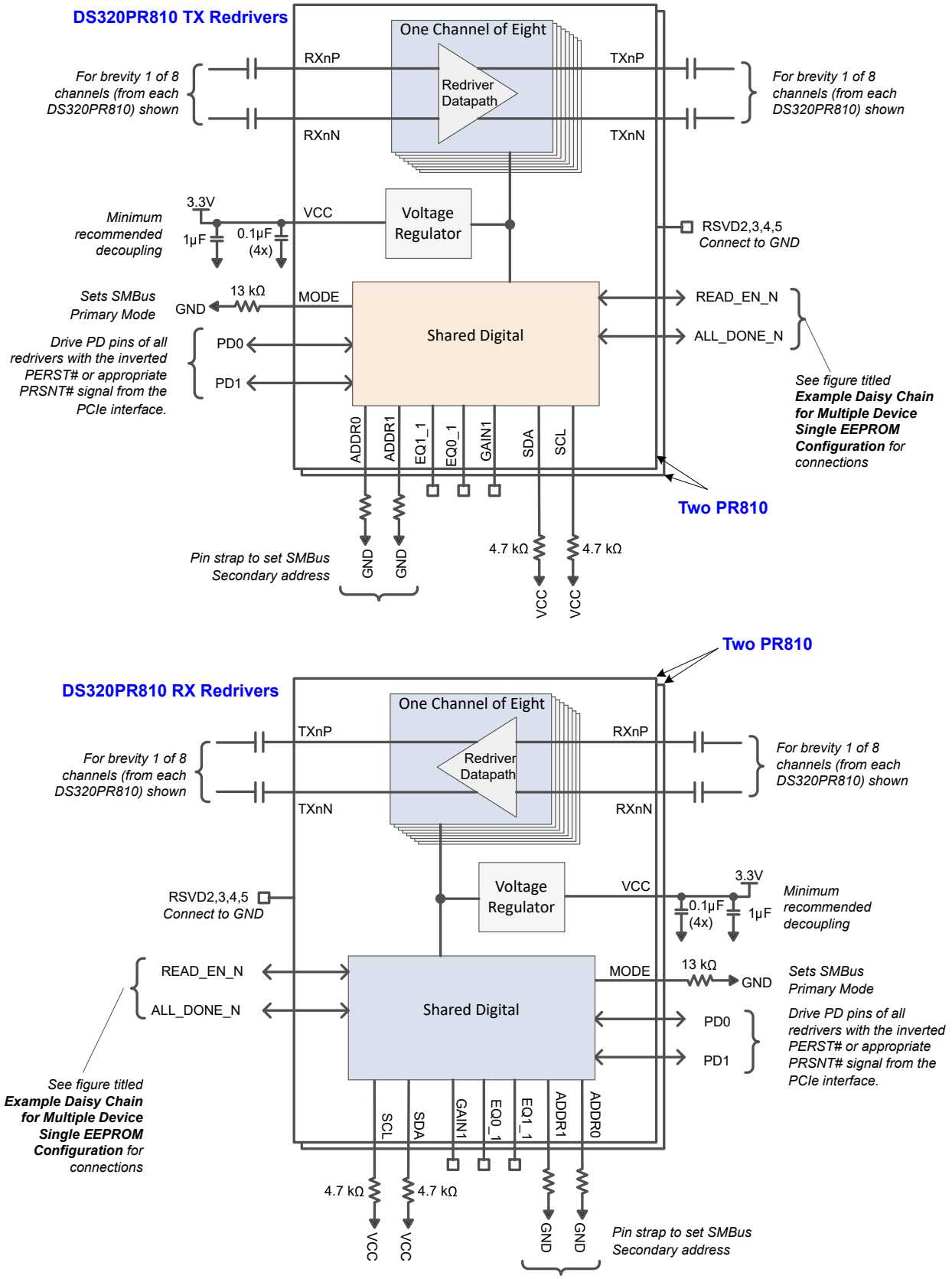

Figure 8-3. Simplified Schematic for PCIe x16 Lane Configuration in SMBus/I²C Primary mode

Figure 8-4 shows a simplified schematic for x16 lane configuration in SMBus/I²C Secondary mode.

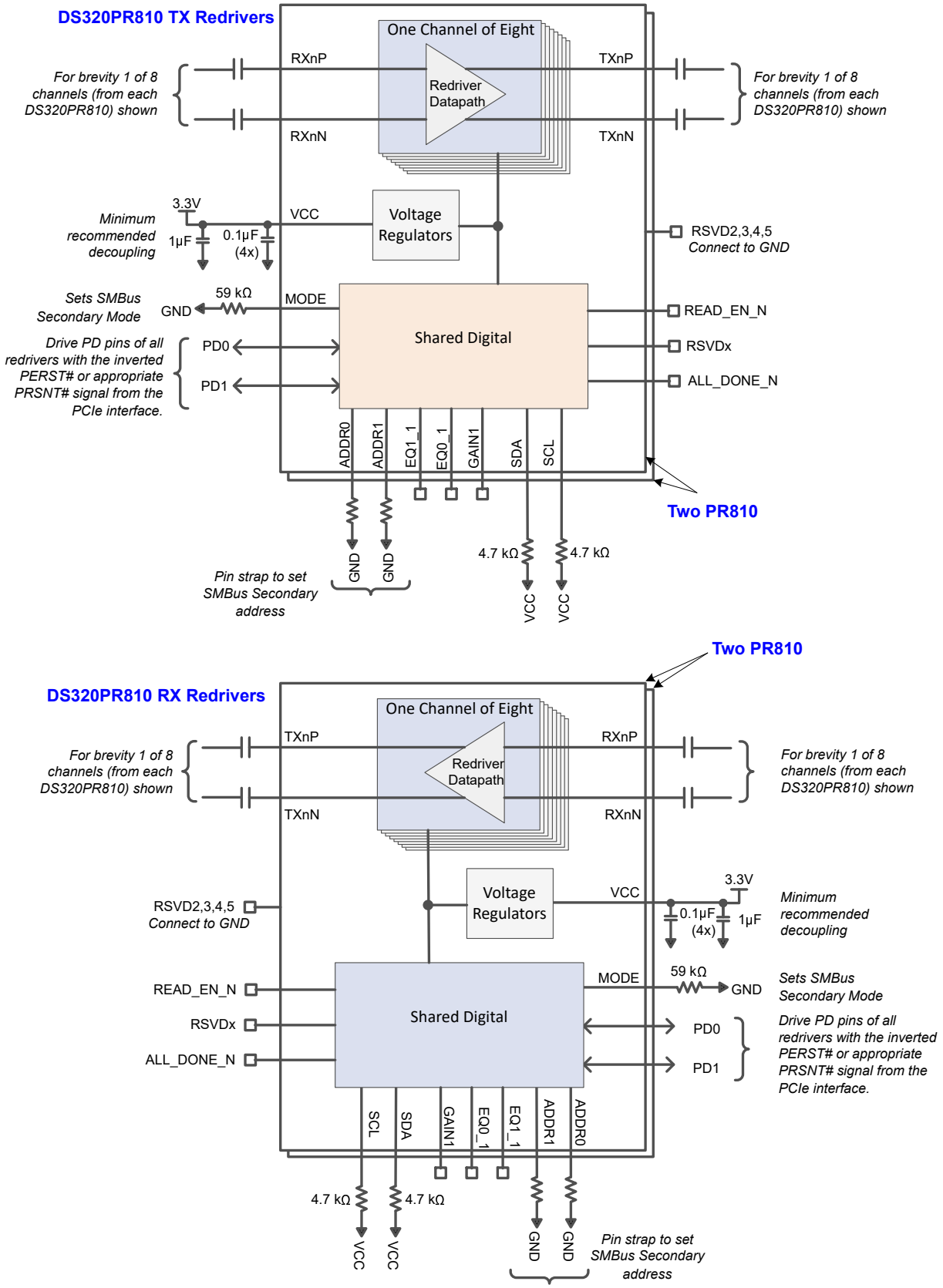

Figure 8-4. Simplified Schematic for PCIe x16 Lane Configuration in SMBus/I²C Secondary mode

Copyright © 2022 Texas Instruments Incorporated

8.2.1.3 Application Curves

The DS320PR810 is a linear redriver that can be used to extend channel reach of a PCIe link. Normally, PCIe-compliant Tx and Rx are equipped with signal-conditioning functions and can handle channel losses of up to 36 dB at 16 GHz. With the DS320PR810, the total channel loss between a PCIe root complex and an end point can be extended up to 58 dB at 16 GHz.

To demonstrate the reach extension capability of the DS320PR810, two comparative setups are constructed. In first setup as shown in Figure 8-5 there is no redriver in the PCIe 5.0 link. Figure 8-6 shows eye diagram at the end of the link using SigTest. In second setup as shown in Figure 8-7, the DS320PR810 is inserted in the middle to extend link reach. Figure 8-8 shows SigTest eye diagram.

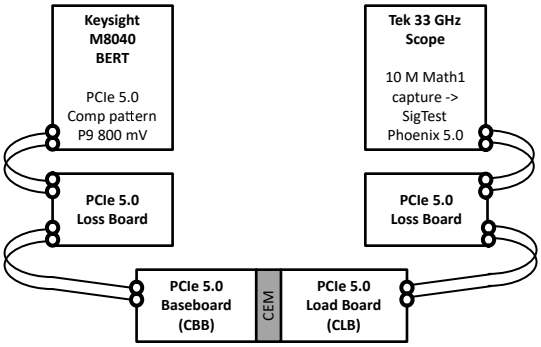

Figure 8-5. PCIe 5.0 Link Baseline Setup Without Redriver the Link Elements

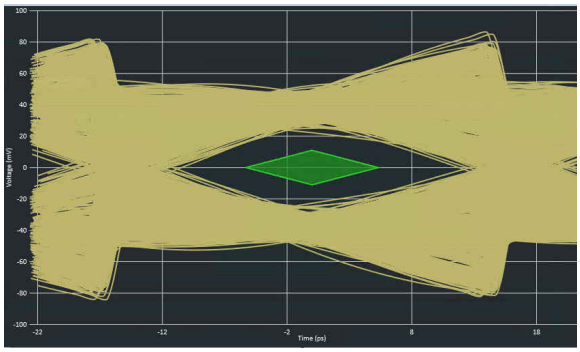

Figure 8-6. PCIe 5.0 link Baseline Setup Without Redriver Eye Diagram Using SigTest

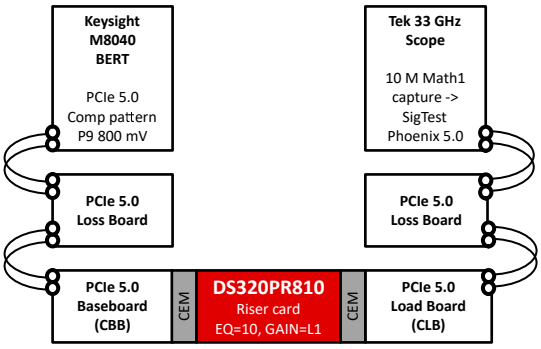

Figure 8-7. PCIe 5.0 Link Setup with the DS320PR810 the Link Elements

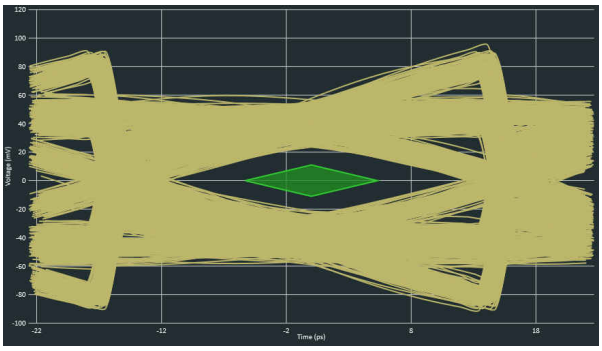

Figure 8-8. PCIe 5.0 Link Setup with the DS320PR810 Eye Diagram Using SigTest

Table 8-1 summarizes the PCIe 5.0 links without and with the DS320PR810. The illustration shows that redriver is capable of ≅22 dB reach extension at PCIe 5.0 speed with EQ = 10 (EQ gain of 16 dB) and GAIN1,2 = L1 (flat gain of −4 dB). Note: actual reach extension depends on various signal integrity factors. It is recommended to run signal intergrity simulations with all the components in the link to get any guidance.

Table 8-1. PCIe 5.0 Reach Extension using the DS320PR810

Setup	Pre Channel Loss	Post Channel Loss	Total Loss	Eye at BER 1E-12	SigTest Pass?
Baseline – no DUT	—	—	≅36 dB	14 ps, 41 mV	Pass
With DUT (DS320PR810)	≅29 dB	≅29 dB	≅58 dB	14 ps, 33 mV	Pass

9 Power Supply Recommendations

Follow these general guidelines when designing the power supply:

1. The power supply should be designed to provide the operating conditions outlined in the recommended operating conditions section in terms of DC voltage, AC noise, and start-up ramp time.
2. The DS320PR810 does not require any special power supply filtering, such as ferrite beads, provided that the recommended operating conditions are met. Only standard supply decoupling is required. Typical supply decoupling consists of a 0.1 µF capacitor per VCC pin, one 1.0 µF bulk capacitor per device, and one 10 µF bulk capacitor per power bus that delivers power to one or more DS320PR810 devices. The local decoupling (0.1 µF) capacitors must be connected as close to the VCC pins as possible and with minimal path to the DS320PR810 ground pad.
3. The DS320PR810 voltage regulator output pins require decoupling caps of 0.1 µF near each pin. The regulator is only for internal use. Do not use to provide power to any external component.

10 Layout

10.1 Layout Guidelines

The following guidelines should be followed when designing the layout:

1. Decoupling capacitors should be placed as close to the VCC pins as possible. Placing the decoupling capacitors directly underneath the device is recommended if the board design permits.
2. High-speed differential signals TXnP/TXnN and RXnP/RXnN should be tightly coupled, skew matched, and impedance controlled.
3. Vias should be avoided when possible on the high-speed differential signals. When vias must be used, take care to minimize the via stub, either by transitioning through most or all layers or by back drilling.
4. GND relief can be used (but is not required) beneath the high-speed differential signal pads to improve signal integrity by counteracting the pad capacitance.
5. GND vias should be placed directly beneath the device connecting the GND plane attached to the device to the GND planes on other layers. This has the added benefit of improving thermal conductivity from the device to the board.

Copyright © 2022 Texas Instruments Incorporated

10.2 Layout Example

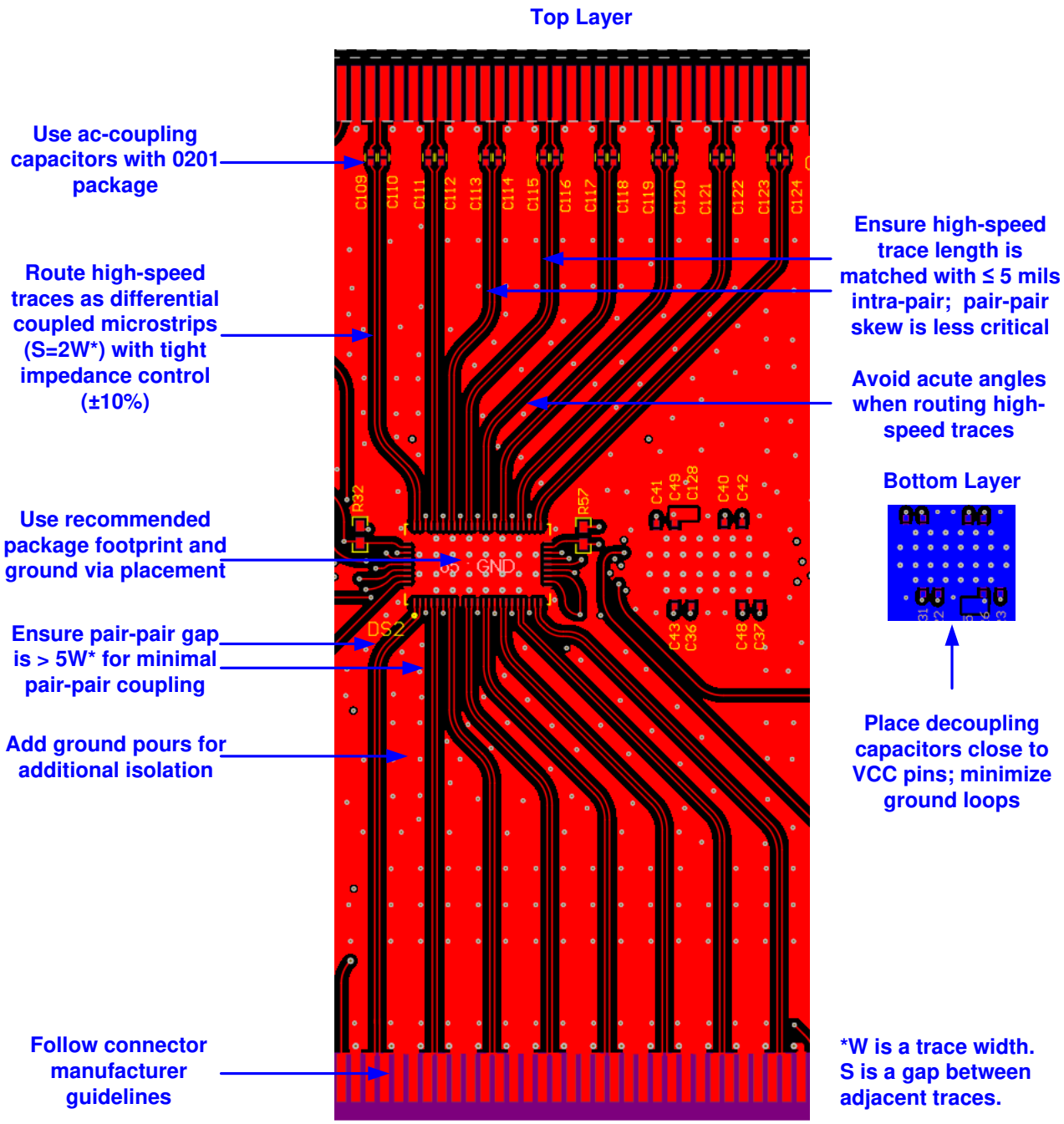

Figure 10-1. DS320PR810 Layout Example – Sub-Section of a PCIe Riser Card With CEM Connectors

11 Device and Documentation Support

11.1 Receiving Notification of Documentation Updates

To receive notification of documentation updates, navigate to the device product folder on ti.com. Click on *Subscribe to updates* to register and receive a weekly digest of any product information that has changed. For change details, review the revision history included in any revised document.

11.2 Support Resources

TI E2E™ support forums are an engineer's go-to source for fast, verified answers and design help — straight from the experts. Search existing answers or ask your own question to get the quick design help you need.

Linked content is provided "AS IS" by the respective contributors. They do not constitute TI specifications and do not necessarily reflect TI's views; see TI's Terms of Use.

11.3 Trademarks

TI E2E™ is a trademark of Texas Instruments.
All trademarks are the property of their respective owners.

11.4 Electrostatic Discharge Caution

This integrated circuit can be damaged by ESD. Texas Instruments recommends that all integrated circuits be handled with appropriate precautions. Failure to observe proper handling and installation procedures can cause damage.

ESD damage can range from subtle performance degradation to complete device failure. Precision integrated circuits may be more susceptible to damage because very small parametric changes could cause the device not to meet its published specifications.

11.5 Glossary

TI Glossary	This glossary lists and explains terms, acronyms, and definitions.

12 Mechanical, Packaging, and Orderable Information

The following pages include mechanical, packaging, and orderable information. This information is the most current data available for the designated devices. This data is subject to change without notice and revision of this document. For browser-based versions of this data sheet, refer to the left-hand navigation.

Copyright © 2022 Texas Instruments Incorporated

PACKAGING INFORMATION

Orderable Device	Status (1)	Package Type	Package Drawing	Pins	Package Qty	Eco Plan (2)	Lead finish/ Ball material (6)	MSL Peak Temp (3)	Op Temp (°C)	Device Marking (4/5)	Samples
DS320PR810NJXR	ACTIVE	WQFN	NJX	64	3000	RoHS & Green	NIPDAU	Level-2-260C-1 YEAR	-40 to 85	5PR8	Samples
DS320PR810NJXT	ACTIVE	WQFN	NJX	64	250	RoHS & Green	NIPDAU	Level-2-260C-1 YEAR	-40 to 85	5PR8	Samples

(1) The marketing status values are defined as follows:
ACTIVE: Product device recommended for new designs.
LIFEBUY: TI has announced that the device will be discontinued, and a lifetime-buy period is in effect.
NRND: Not recommended for new designs. Device is in production to support existing customers, but TI does not recommend using this part in a new design.
PREVIEW: Device has been announced but is not in production. Samples may or may not be available.
OBSOLETE: TI has discontinued the production of the device.

(2) **RoHS:** TI defines "RoHS" to mean semiconductor products that are compliant with the current EU RoHS requirements for all 10 RoHS substances, including the requirement that RoHS substance do not exceed 0.1% by weight in homogeneous materials. Where designed to be soldered at high temperatures, "RoHS" products are suitable for use in specified lead-free processes. TI may reference these types of products as "Pb-Free".
RoHS Exempt: TI defines "RoHS Exempt" to mean products that contain lead but are compliant with EU RoHS pursuant to a specific EU RoHS exemption.
Green: TI defines "Green" to mean the content of Chlorine (Cl) and Bromine (Br) based flame retardants meet JS709B low halogen requirements of <=1000ppm threshold. Antimony trioxide based flame retardants must also meet the <=1000ppm threshold requirement.

(3) MSL, Peak Temp. - The Moisture Sensitivity Level rating according to the JEDEC industry standard classifications, and peak solder temperature.

(4) There may be additional marking, which relates to the logo, the lot trace code information, or the environmental category on the device.

(5) Multiple Device Markings will be inside parentheses. Only one Device Marking contained in parentheses and separated by a "~" will appear on a device. If a line is indented then it is a continuation of the previous line and the two combined represent the entire Device Marking for that device.

(6) Lead finish/Ball material - Orderable Devices may have multiple material finish options. Finish options are separated by a vertical ruled line. Lead finish/Ball material values may wrap to two lines if the finish value exceeds the maximum column width.

Important Information and Disclaimer: The information provided on this page represents TI's knowledge and belief as of the date that it is provided. TI bases its knowledge and belief on information provided by third parties, and makes no representation or warranty as to the accuracy of such information. Efforts are underway to better integrate information from third parties. TI has taken and continues to take reasonable steps to provide representative and accurate information but may not have conducted destructive testing or chemical analysis on incoming materials and chemicals. TI and TI suppliers consider certain information to be proprietary, and thus CAS numbers and other limited information may not be available for release.

In no event shall TI's liability arising out of such information exceed the total purchase price of the TI part(s) at issue in this document sold by TI to Customer on an annual basis.

TAPE AND REEL INFORMATION

REEL DIMENSIONS

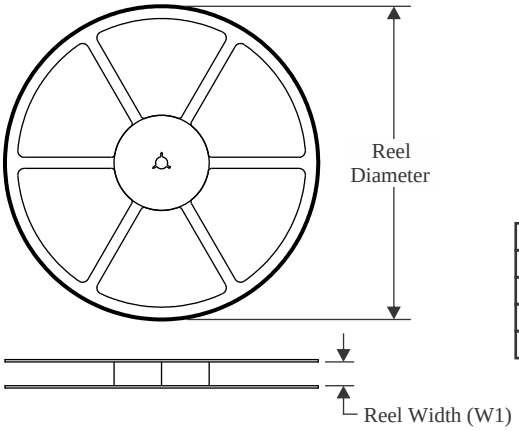

TAPE DIMENSIONS

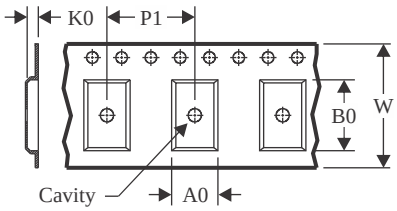

A0	Dimension designed to accommodate the component width
B0	Dimension designed to accommodate the component length
K0	Dimension designed to accommodate the component thickness
W	Overall width of the carrier tape
P1	Pitch between successive cavity centers

QUADRANT ASSIGNMENTS FOR PIN 1 ORIENTATION IN TAPE

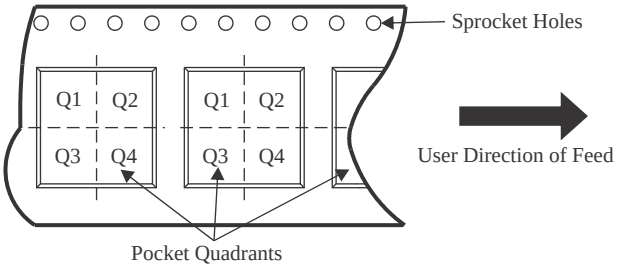

*All dimensions are nominal

Device	Package Type	Package Drawing	Pins	SPQ	Reel Diameter (mm)	Reel Width W1 (mm)	A0 (mm)	B0 (mm)	K0 (mm)	P1 (mm)	W (mm)	Pin1 Quadrant
DS320PR810NJXR	WQFN	NJX	64	3000	330.0	16.4	5.8	10.3	1.2	12.0	16.0	Q1
DS320PR810NJXT	WQFN	NJX	64	250	180.0	16.4	5.8	10.3	1.2	12.0	16.0	Q1

TAPE AND REEL BOX DIMENSIONS

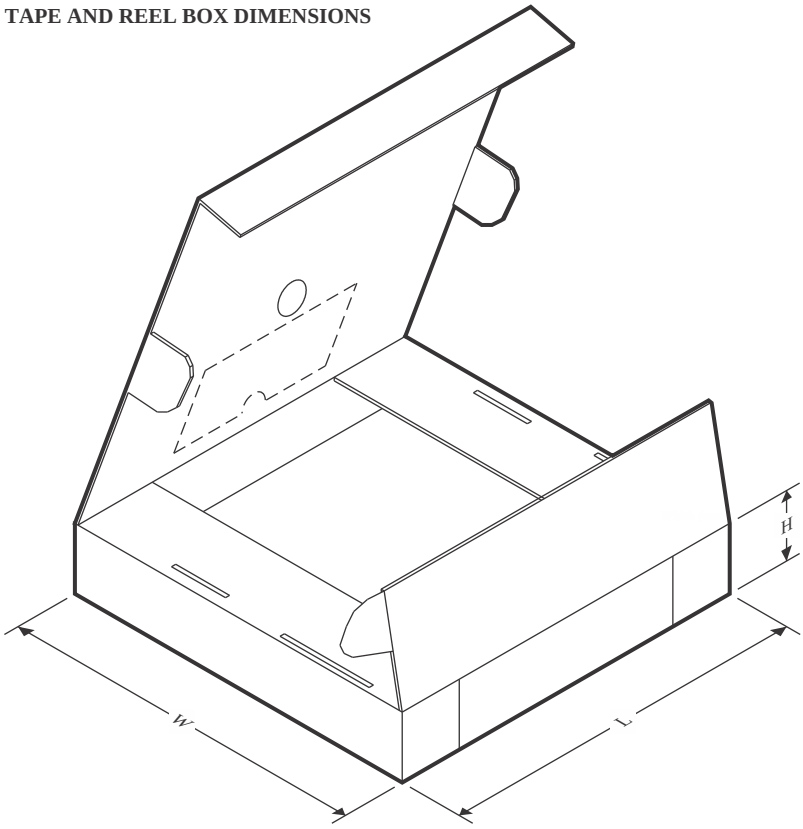

*All dimensions are nominal

Device	Package Type	Package Drawing	Pins	SPQ	Length (mm)	Width (mm)	Height (mm)
DS320PR810NJXR	WQFN	NJX	64	3000	367.0	367.0	35.0
DS320PR810NJXT	WQFN	NJX	64	250	210.0	185.0	35.0

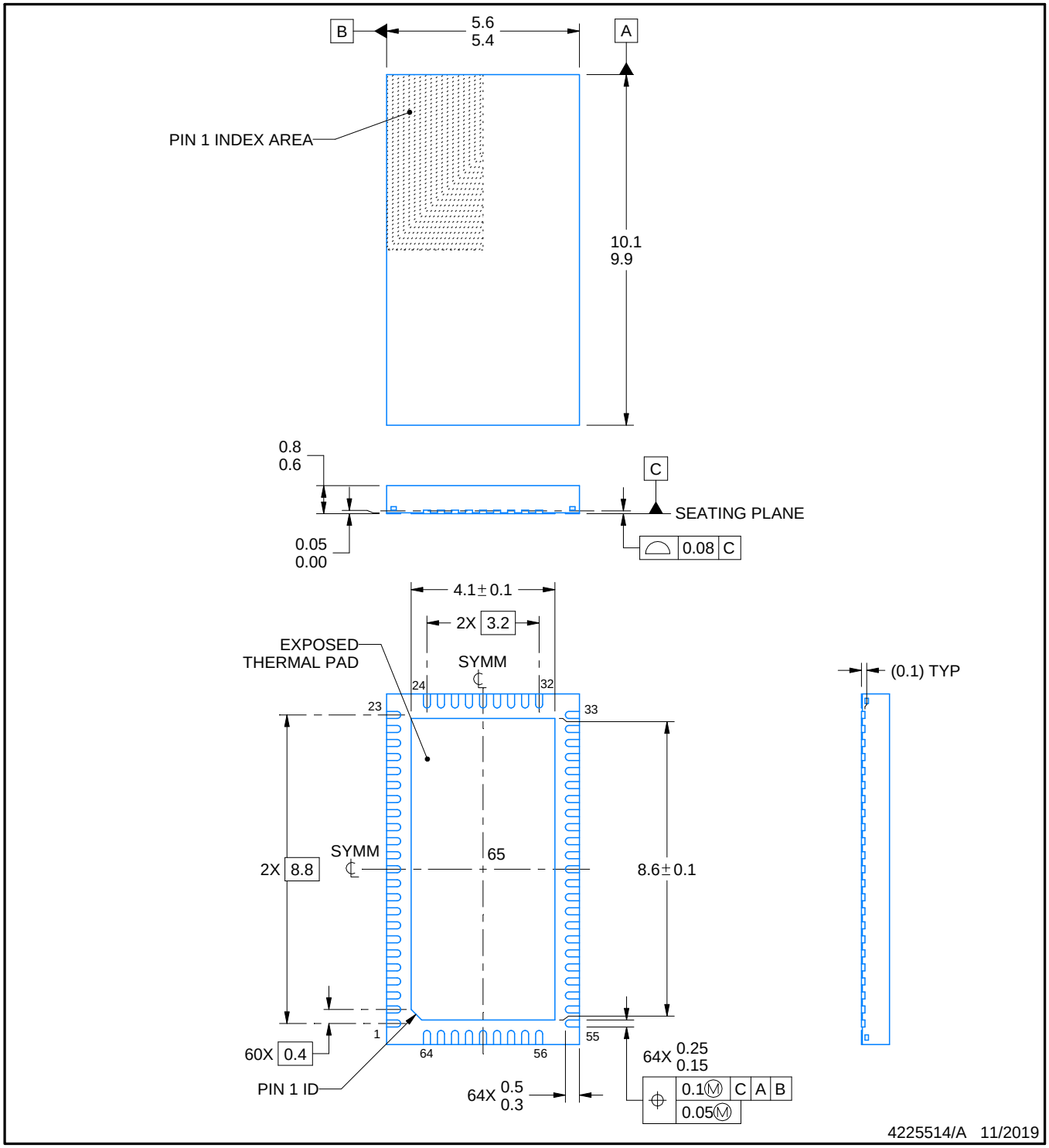

NOTES:

1. All linear dimensions are in millimeters. Any dimensions in parenthesis are for reference only. Dimensioning and tolerancing per ASME Y14.5M.
2. This drawing is subject to change without notice.
3. The package thermal pad must be soldered to the printed circuit board for thermal and mechanical performance.

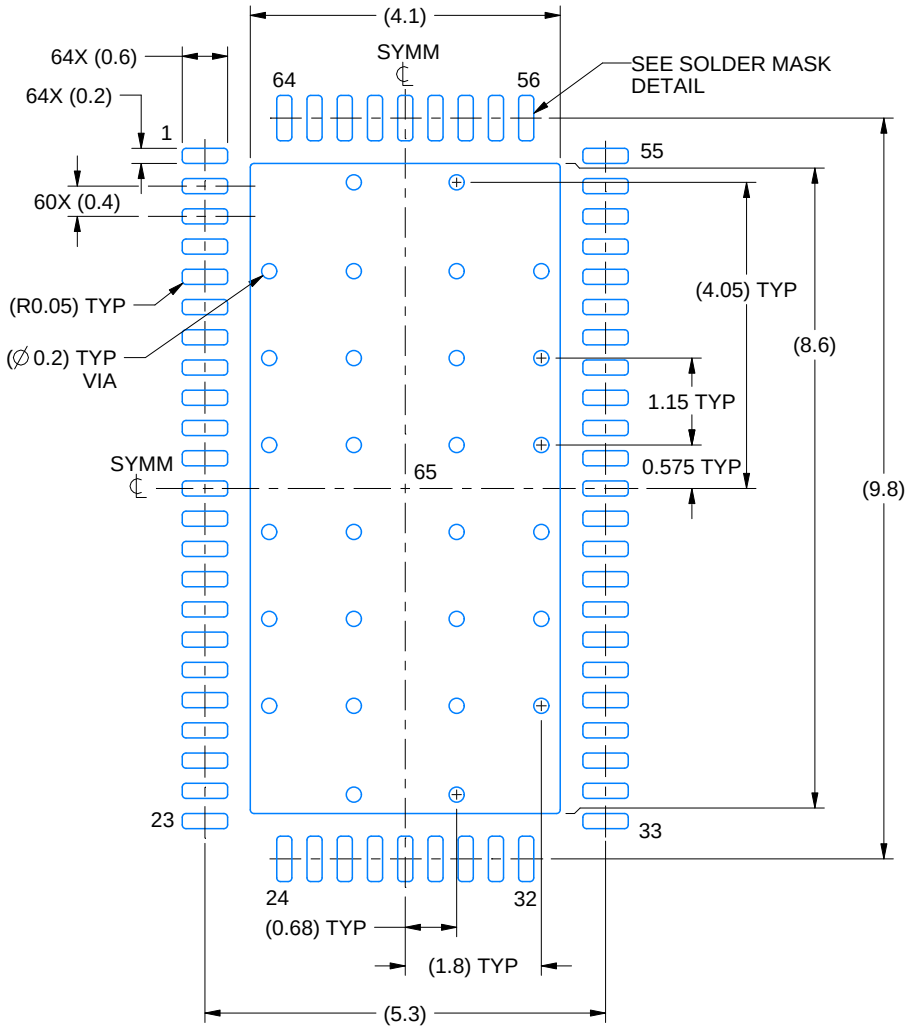

LAND PATTERN EXAMPLE
EXPOSED METAL SHOWN
SCALE: 10X

SOLDER MASK DETAILS

4225514/A 11/2019

NOTES: (continued)

4. This package is designed to be soldered to a thermal pad on the board. For more information, see Texas Instruments literature number SLUA271 (www.ti.com/lit/slua271).
5. Vias are optional depending on application, refer to device data sheet. If any vias are implemented, refer to their locations shown on this view. It is recommended that vias under paste be filled, plugged or tented.

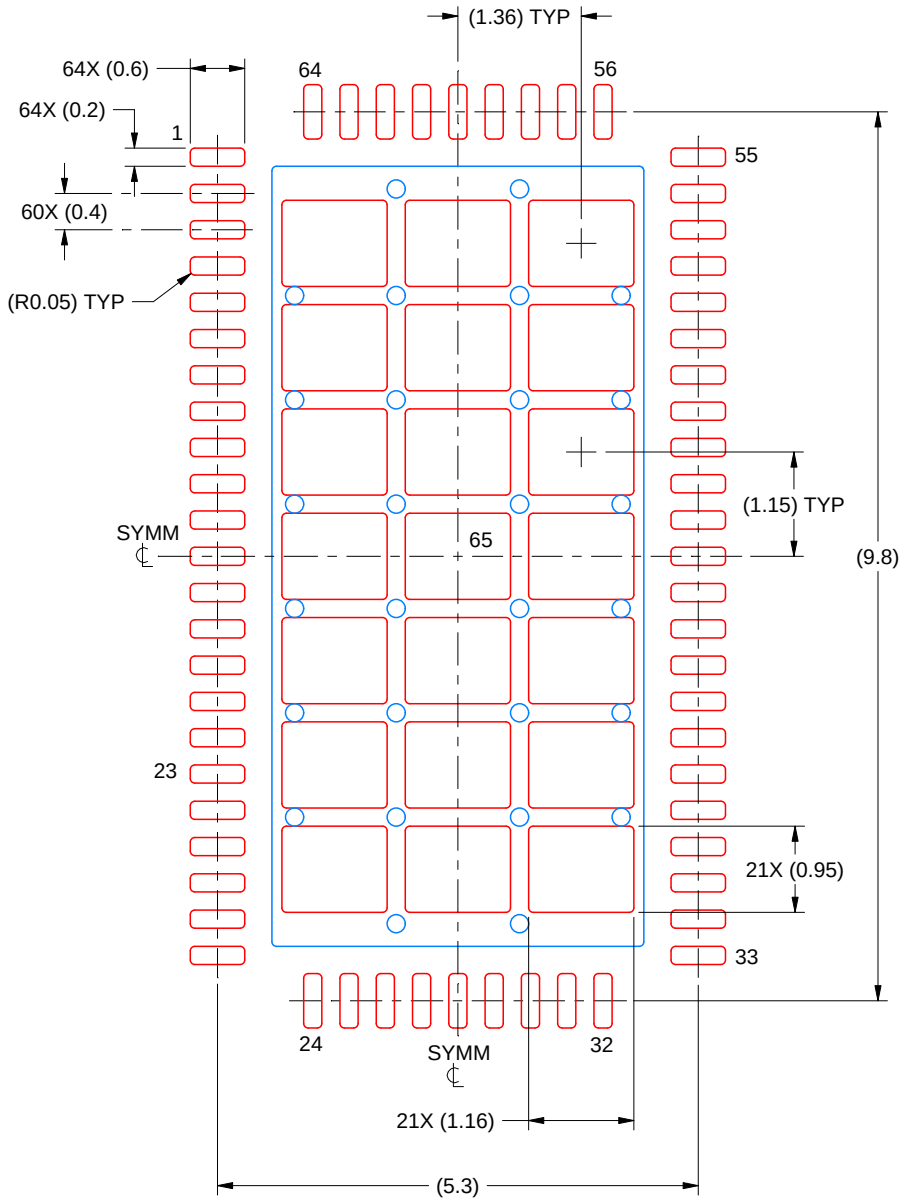

SOLDER PASTE EXAMPLE
BASED ON 0.125 MM THICK STENCIL
SCALE: 12X

EXPOSED PAD 65
66% PRINTED SOLDER COVERAGE BY AREA UNDER PACKAGE

4225514/A 11/2019

NOTES: (continued)

6. Laser cutting apertures with trapezoidal walls and rounded corners may offer better paste release. IPC-7525 may have alternate design recommendations.

IMPORTANT NOTICE AND DISCLAIMER

TI PROVIDES TECHNICAL AND RELIABILITY DATA (INCLUDING DATA SHEETS), DESIGN RESOURCES (INCLUDING REFERENCE DESIGNS), APPLICATION OR OTHER DESIGN ADVICE, WEB TOOLS, SAFETY INFORMATION, AND OTHER RESOURCES “AS IS” AND WITH ALL FAULTS, AND DISCLAIMS ALL WARRANTIES, EXPRESS AND IMPLIED, INCLUDING WITHOUT LIMITATION ANY IMPLIED WARRANTIES OF MERCHANTABILITY, FITNESS FOR A PARTICULAR PURPOSE OR NON-INFRINGEMENT OF THIRD PARTY INTELLECTUAL PROPERTY RIGHTS.

These resources are intended for skilled developers designing with TI products. You are solely responsible for (1) selecting the appropriate TI products for your application, (2) designing, validating and testing your application, and (3) ensuring your application meets applicable standards, and any other safety, security, regulatory or other requirements.

These resources are subject to change without notice. TI grants you permission to use these resources only for development of an application that uses the TI products described in the resource. Other reproduction and display of these resources is prohibited. No license is granted to any other TI intellectual property right or to any third party intellectual property right. TI disclaims responsibility for, and you will fully indemnify TI and its representatives against, any claims, damages, costs, losses, and liabilities arising out of your use of these resources.

TI’s products are provided subject to TI’s Terms of Sale or other applicable terms available either on ti.com or provided in conjunction with such TI products. TI’s provision of these resources does not expand or otherwise alter TI’s applicable warranties or warranty disclaimers for TI products.

TI objects to and rejects any additional or different terms you may have proposed.

Mailing Address: Texas Instruments, Post Office Box 655303, Dallas, Texas 75265
Copyright © 2022, Texas Instruments Incorporated