molex
one company › a world of innovation

This document was generated on 03/22/2010

PLEASE CHECK WWW.MOLEX.COM FOR LATEST PART INFORMATION

Part Number: 0353121062

Status: Active

Description: 2.50mm (.098") Pitch Header, Vertical, Shrouded, with Positive Lock, 10 Circuits, PA Polyamide (Nylon) 6/6, Glass-filled Red

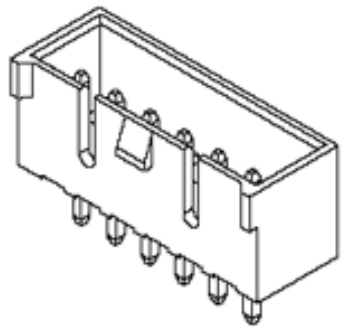

Series

image - Reference only

Documents:

3D Model
Packaging Specification (PDF)
Drawing (PDF)
Product Specification PS-35155-002 (PDF)
RoHS Certificate of Compliance (PDF)

Agency Certification

CSA	LR19980
TUV	E9450420E01
UL	E29179

General

Product Family	PCB Headers
Series	35312
Application	Wire-to-Board
Product Name	N/A

Physical

Breakaway	No
Circuits (Loaded)	10
Circuits (maximum)	10
Color - Resin	Natural
Durability (mating cycles max)	30
First Mate / Last Break	No
Flammability	94V-0
Glow-Wire Compliant	No
Guide to Mating Part	No
Keying to Mating Part	None
Lock to Mating Part	Yes
Material - Plating Mating	Tin
Material - Plating Termination	Tin
Material - Resin	Nylon
Number of Rows	1
Orientation	Vertical
PC Tail Length (in)	0.134 In
PC Tail Length (mm)	3.40 mm
PCB Locator	No
PCB Retention	None
PCB Thickness Recommended (in)	0.062 In
PCB Thickness Recommended (mm)	1.60 mm
Packaging Type	Bag
Pitch - Mating Interface (in)	0.098 In
Pitch - Mating Interface (mm)	2.50 mm
Polarized to PCB	No
Shrouded	Partial
Stackable	No
Surface Mount Compatible (SMC)	No
Temperature Range - Operating	-40°C to +105°C
Termination Interface: Style	Through Hole

Electrical

Current - Maximum per Contact	3A

EU RoHS
ELV and RoHS Compliant

China RoHS

REACH SVHC
Not Reviewed

Halogen-Free Status
Not Halogen-Free

Need more information on product environmental compliance?

Email productcompliance@molex.com
For a multiple part number RoHS Certificate of Compliance, click here

Please visit the Contact Us section for any non-product compliance questions.

Search Parts in this Series
35312Series

Mates With
Wire-to-Wire and Wire-to-Board Housing
35572 Crimp Housing, 35155

Voltage - Maximum	250V

Material Info

Reference - Drawing Numbers

Product Specification	PS-35155-002
Sales Drawing	SD-35312-001, SD-35312-004, SD-35312-005

This document was generated on 03/22/2010

PLEASE CHECK WWW.MOLEX.COM FOR LATEST PART INFORMATION

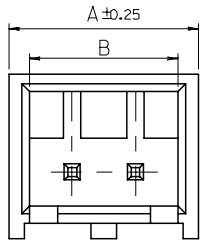

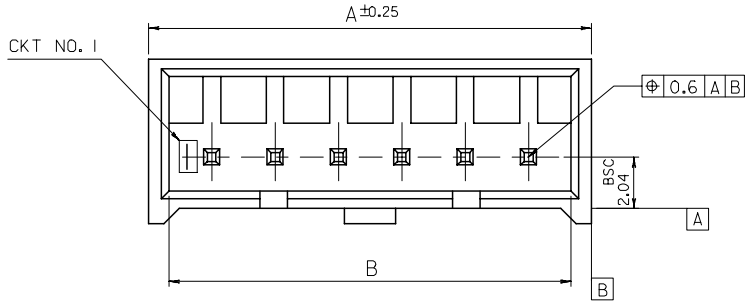

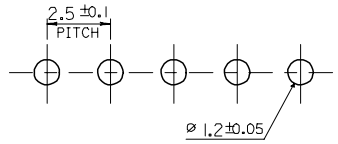

P.C.BOARD LAYOUT

THK. : 1.6t

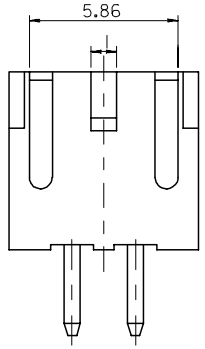

2,3 CKT ONLY

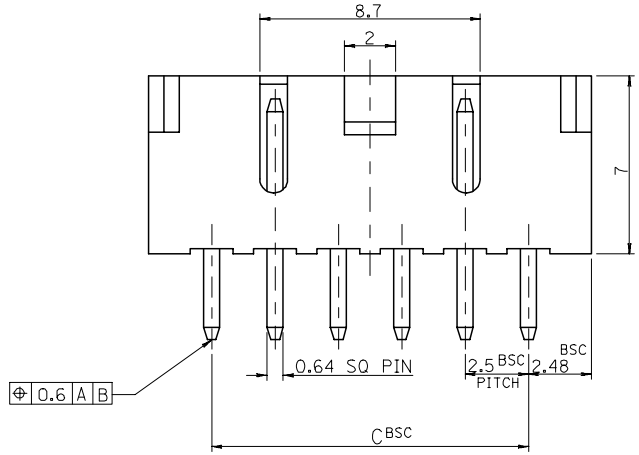

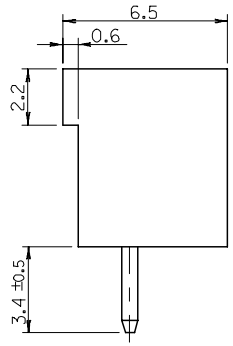

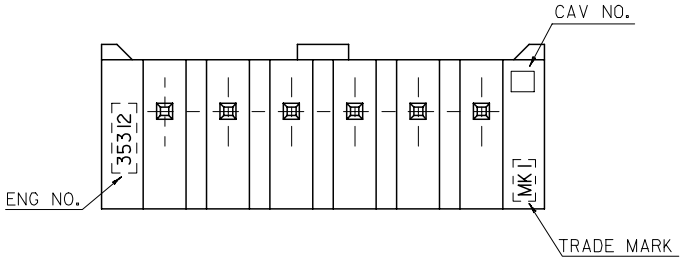

NOTE

1. MATERIAL: WAFER : NYLON66, GLASS FILLED 20%
   PIN : BRASS, TIN PLATED

Ⓑ 2. LEGEND

35312 - ** 6 *

- COLOR : 0 --- NATURAL
  2 --- RED
  3 --- YELLOW
  4 --- BLUE
- CKT(02,03,04....)

3. THIS PRODUCT SHALL BE COMPLIED WITH RoHS COMPATIBLE(LEAD FREE SOLDERABILITY)

35	38.36	39.96	35312-156*	15
32.5	35.86	37.46	-146*	14
30	33.36	34.96	-136*	13
27.5	30.86	32.46	-126*	12
25	28.36	29.96	-116*	11
22.5	25.86	27.46	-106*	10
20	23.36	24.96	-096*	9
17.5	20.86	22.46	-086*	8
15	18.36	19.96	-076*	7
12.5	15.86	17.46	-066*	6
10	13.36	14.96	-056*	5
7.5	10.86	12.46	-046*	4
5	8.36	9.96	-036*	3
2.5	5.86	7.46	35312-026*	2
C	B	A	ENG NO.	CKT NO.

DWG. NO. SD-35312-001

SIMILAR ITEM 35312-**1*

PROJECT NO.

DO NOT SCALE DRAWING
DIMENSION IN METRIC

REVISED
ECN NO.KOR2006-0105
DRWN: K.S.KIM 060323
CHK: K.S.KIM
APPR: Y.Soo.KIM
DESCRIPTION

B
REV

QUALITY SYMBOLS
MAJOR
CRITICAL

GENERAL TOLERANCES: (UNLESS SPECIFIED)

	mm	INCH
4 PLACES	±0.	±-
3 PLACES	±0.	±-
2 PLACES	±0.	±-
1 PLACE	±0.2	±-
ANGULAR: ± 2 °		

DRAFT WHERE APPLICABLE MUST REMAIN WITHIN DIMENSIONS

SCALE 5-1

DESIGN UNITS ☒mm ☐INCH

THIRD ANGLE PROJECTION

DIMENSIONS: ☐ mm/INCH ☐ INCH/mm ☒ mm ONLY

SHT REV

REVISE ON CAD ONLY

DRAWN BY & DATE H.S.SHIN

CHECKED BY & DATE Y.Soo.KIM

APPROVED BY & DATE S.H.CHOI

CAD FILENAME

TITLE: 2.5 PITCH W/B CONN. WAFER ASS'Y (WITH LOCK)

MOLEX INCORPORATED

MATERIAL NO. 35312**6*

DRAWING NO. SD-35312-001

SHEET NO. 1 OF 1

THIS DRAWING CONTAINS INFORMATION THAT IS PROPRIETARY TO MOLEX INCORPORATED AND SHOULD NOT BE USED WITHOUT WRITTEN PERMISSION.

SIZE B

KOREA

MX-A3

DWG. NO. SD-35312-004

SIMILAR ITEM 35312-**18

PROJECT NO.

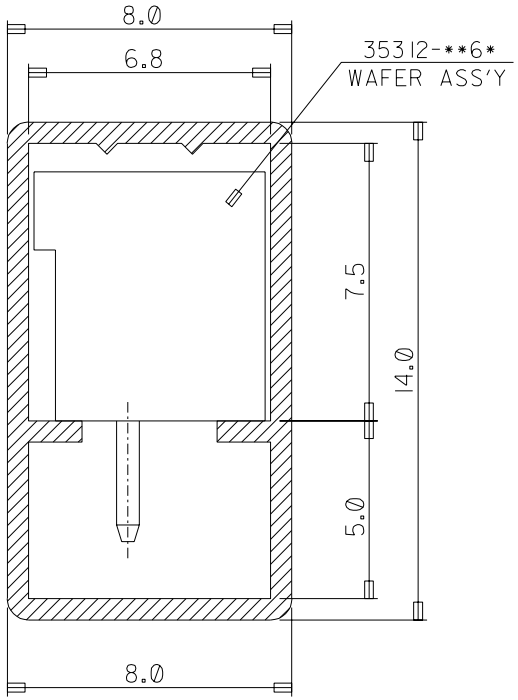

NOTE

1. TUBE THK. : 0.6t
2. LENGTH : 600mm
3. THIS PRODUCT SHALL BE COMPLIED WITH RoHS COMPATIBLE (LEAD FREE SOLDERABILITY)

Q'TY	ENG NO.	CKT.	USED ON
10	35312-1568	15P	35312 SERIES
15	-0468	14P	
15	-1468	13P	
15	-1268	12P	
15	-1168	11P	
20	-1068	10P	
20	-0968	9P	
25	-0868	8P	
25	-0768	7P	
30	-0668	6P	
35	-0568	5P	
45	-0468	4P	
55	35312-0368	3P	

NEW RELEASED
EC NO. KOR2005-0066
DRWN: K.S.KIM 040722
CH'K: Y.Soo.KIM
APPR: C.W.LEE

DESCRIPTION

A

REV

QUALITY SYMBOLS
MAJOR ▼ =
CRITICAL (C) =

GENERAL TOLERANCES: (UNLESS SPECIFIED)

	mm	INCH
4 PLACES	±0.	±.
3 PLACES	±0.	±.
2 PLACES	±0.	±.
1 PLACE	±0.3	±.
ANGULAR: ± 2 °		

DRAFT WHERE APPLICABLE MUST REMAIN WITHIN DIMENSIONS

SCALE 5-1

DESIGN UNITS ☒mm ☐INCH

THIRD ANGLE PROJECTION

DIMENSIONS: ☐ mm/INCH ☐ INCH/mm ☒ mm ONLY

SHT | REV

REVISE ON CAD ONLY

DRAWN BY & DATE K.S.KIM

CHECKED BY & DATE Y.Soo.KIM

APPROVED BY & DATE C.W.LEE

CAD FILENAME —

TITLE: PACKING FOR 35312 (S/S C-TV)

molex MOLEX INCORPORATED

MATERIAL NO. 35312-**68

DRAWING NO. SD-35312-004

SHEET NO. 1/1

SIZE A

THIS DRAWING CONTAINS INFORMATION THAT IS PROPRIETARY TO MOLEX INCORPORATED AND SHOULD NOT BE USED WITHOUT WRITTEN PERMISSION.

MX-A4

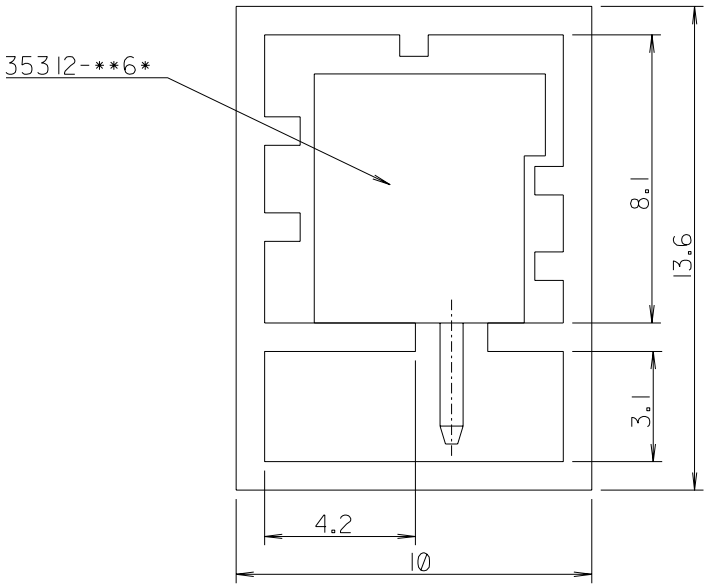

NOTE

1. TUBE LENGTH : 550mm
2. TUBE THICKNESS : 0.8mm
3. THIS PRODUCT SHALL BE COMPLIED WITH RoHS COMPATIBLE(LEAD FREE SOLDERABILITY)

Q'TY	ENG NO.	CKTS	USED ON
10	35312-1569	15	35312 SERIES
10	-1469	14	
10	-1369	13	
15	-1269	12	
15	-1169	11	
15	-1069	10	
20	-0969	9	
20	-0869	8	
25	-0769	7	
30	-0669	6	
35	-0569	5	
40	-0469	4	
50	-0369	3	
70	35312-0269	2	

DWG. NO. SD-35312-005

SIMILAR ITEM 35312-**19

PROJECT NO.

NEW RELEASED
EC NO. KOR2005-0066
DRWN: K.S.KIM 041008
CH'K: Y.Soo.KIM
APPR: C.W.LEE

DESCRIPTION

REV: A

QUALITY SYMBOLS
MAJOR =
CRITICAL (C) =

GENERAL TOLERANCES: (UNLESS SPECIFIED)

	mm	INCH
4 PLACES	±0.	±.
3 PLACES	±0.	±.
2 PLACES	±0.	±.
1 PLACE	±0.3	±.
ANGULAR: ± 2 °		

DRAFT WHERE APPLICABLE MUST REMAIN WITHIN DIMENSIONS

SCALE 5-1

DESIGN UNITS ☒mm ☐INCH

THIRD ANGLE PROJECTION

DIMENSIONS: ☐ mm/INCH ☐ INCH/mm ☒ mm ONLY

SHT | REV

REVISE ON CAD ONLY

DRAWN BY & DATE: H.S.SHIN

CHECKED BY & DATE: Y.Soo.KIM

APPROVED BY & DATE: C.W.LEE

CAD FILENAME: —

TITLE: TUBE PACKAGED FOR 35312 SERIES

molex MOLEX INCORPORATED

MATERIAL NO. 35312**69

DRAWING NO. SD-35312-005

SHEET NO. 1 OF 1

SIZE A

THIS DRAWING CONTAINS INFORMATION THAT IS PROPRIETARY TO MOLEX INCORPORATED AND SHOULD NOT BE USED WITHOUT WRITTEN PERMISSION.

PK35312.DGN

MX-A4