LMX9830 *Bluetooth*® Serial Port Module

1 Features

- Compliant With the *Bluetooth*® 2.0 Core Specification
  - Qualified Design ID (PRD 2.0): B012364
- Input Sensitivity Better than –80 dBm
- Class 2 Operation
- Low Power Consumption
- High Integration:
  - Implemented in 0.18-µm CMOS Technology
  - RF Includes Antenna Filter and Switch On-Chip

2 Applications

- Personal Digital Assistants
- POS Terminals
- Data Logging Systems
- Audio Gateway Applications
- Telemedicine/Medical, Industrial and Scientific

3 Description

The Texas Instruments LMX9830 *Bluetooth* Serial Port module is a highly integrated *Bluetooth* 2.0 baseband controller and 2.4-GHz radio, combined to form a complete small form factor (6.1 mm × 9.1 mm × 1.2 mm) *Bluetooth* node.

All hardware and firmware is included to provide a complete solution from antenna through the complete lower and upper layers of the *Bluetooth* stack, up to the application including the Generic Access Profile (GAP), the Service Discovery Application Profile (SDAP), and the Serial Port Profile (SPP). The module includes a configurable service database to fulfill service requests for additional profiles on the host. Moreover, the LMX9830 is prequalified as a *Bluetooth* Integrated Component. Conformance testing through the *Bluetooth* qualification program. The LMX9830 enables a short time to market after system integration by ensuring a high probability of compliance and interoperability.

Based on TI's CompactRISC 16-bit processor architecture and Digital Smart Radio technology, the LMX9830 is optimized to handle the data and link management processing requirements of a *Bluetooth* node.

Device Information(1)

PART NUMBER	PACKAGE	BODY SIZE (NOM)
LMX9830	NFBGA (60)	9.00 mm × 6.00 mm

(1) For all available packages, see the orderable addendum at the end of the data sheet.

4 Block Diagram

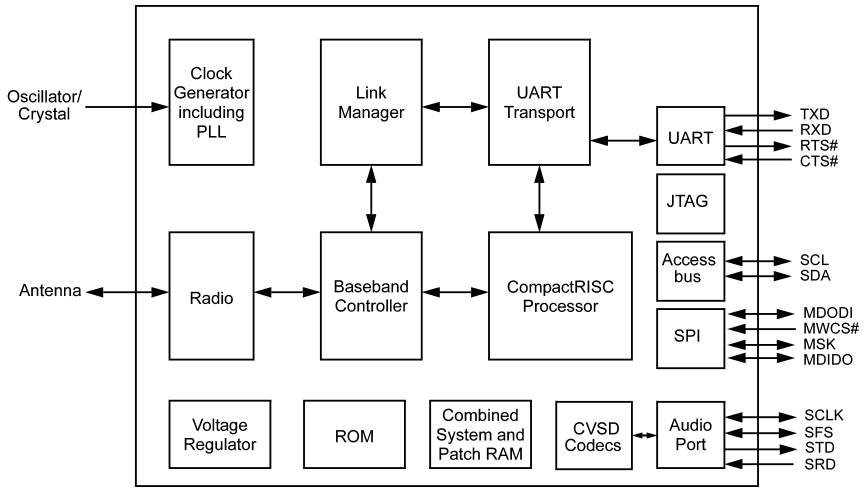

An IMPORTANT NOTICE at the end of this data sheet addresses availability, warranty, changes, use in safety-critical applications, intellectual property matters and other important disclaimers. PRODUCTION DATA.

Table of Contents

1 Features ... 1
2 Applications ... 1
3 Description ... 1
4 Block Diagram ... 1
5 Revision History ... 2
6 Pin Configuration and Functions ... 3
7 Specifications ... 5
7.1 Absolute Maximum Ratings ... 5
7.2 ESD Ratings ... 5
7.3 Recommended Operating Conditions ... 5
7.4 Thermal Information ... 6
7.5 Power Supply Requirements ... 6
7.6 Digital DC Characteristics ... 6
7.7 RF Receiver Performance Characteristics ... 7
7.8 RF Transmitter Performance Characteristics ... 7
7.9 RF Synthesizer Performance Characteristics ... 8
7.10 Typical Characteristics ... 8
8 Parameter Measurement Information ... 9
9 Detailed Description ... 10
9.1 Overview ... 10
9.2 Functional Block Diagram ... 10
9.3 Feature Description ... 10
9.4 Device Functional Modes ... 36
10 Application and Implementation ... 41
10.1 Typical Application ... 41
10.2 System Examples ... 44
11 Power Supply Recommendations ... 47
11.1 Filtered Power Supply ... 47
12 Device and Documentation Support ... 50
12.1 Device Support ... 50
12.2 Documentation Support ... 50
12.3 Community Resources ... 50
12.4 Trademarks ... 50
12.5 Electrostatic Discharge Caution ... 50
12.6 Glossary ... 50
13 Mechanical, Packaging, and Orderable Information ... 50

5 Revision History

NOTE: Page numbers for previous revisions may differ from page numbers in the current version.

Changes from Revision B (April 2013) to Revision C	Page
• Added *ESD Ratings* table, *Feature Description* section, *Device Functional Modes*, *Application and Implementation* section, *Power Supply Recommendations* section, *Layout* section, *Device and Documentation Support* section, and *Mechanical, Packaging, and Orderable Information* section	1

Changes from Revision A (April 2013) to Revision B	Page
• Changed layout of National Data Sheet to TI format	1

Copyright © 2008–2015, Texas Instruments Incorporated

6 Pin Configuration and Functions

NZB Package
60-Pin NFBGA
Top View

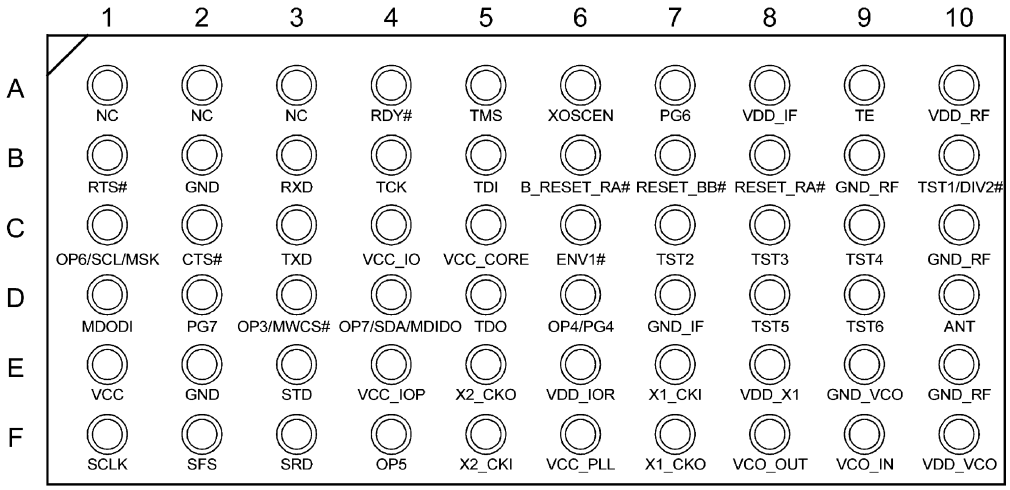

X-ray - Top View

Pin Functions

PAD NAME	PAD LOCATION	TYPE	DEFAULT LAYOUT	DESCRIPTION
ANT	D10	I/O	—	RF Antenna 50 Ω Nominal Impedance
B_RESET_RA#	B6	O	NC	Buffered Reset Radio Output (active low)
CTS#(1)	C2	I	GND **(if not used)**	Host Serial Port Clear To Send (active low)
ENV1#	C6	I	NC	ENV1: Environment Select (active low) used for manufacturing test only
GND	B2,E2	—	—	Ground
GND_IF	D7	—	—	Ground
GND_RF	B9, C10, E10	—	—	Ground
GND_VCO	E9	—	—	Ground
MDODI(2)	D1	I/O	—	SPI Master Out Slave In
NC	A1,A2,A3	—	NC	Treat as no connect. Place pad for mechanical stability
OP3/MWCS#	D3	I	See Table 8 and Table 9	**OP3:** Pin checked during Start-up Sequence for configuration option **MWCS#:** SPI Slave Select Input (active low)
OP4/PG4	D6	**OP4:** I **PG4:** I/O	See Table 8 and Table 9	**OP4**: Pin checked during Start-up Sequence for configuration option **PG4:** GPIO
OP5	F4	I/O	See Table 8 and Table 9	**OP5:** Pin checked during Start-up Sequence for configuration option
OP6/SCL/MSK	C1	**OP6:** I **SCL/MSK:** I/O	See Table 8	**OP6**: Pin checked during Start-up Sequence for configuration option **SCL:** ACCESS.Bus Clock **MSK**: SPI Shift
OP7/SDA/MDIDO	D4	**OP7**: I **SDA/MDIDO**: I/O	See Table 8	**OP7**: Pin checked during Start-up Sequence for configuration option **SDA:** ACCESS.Bus Serial Data **MDIDO**: SPI Master In Slave Out
PG6	A7	I/O	—	GPIO
PG7	D2	I/O	—	GPIO - Default setup RF traffic LED indication

(1) Connect to GND if CTS is not use.
(2) Must use 1-kΩ pullup.

Copyright © 2008–2015, Texas Instruments Incorporated

Pin Functions (continued)

PAD NAME	PAD LOCATION	TYPE	DEFAULT LAYOUT	DESCRIPTION
RDY#	A4	O	NC	JTAG Ready Output (active low)
RESET_BB#	B7	I		Baseband Reset (active low)
RESET_RA#	B8	I		Radio Reset (active low)
RTS#(3)	B1	O	NC **(if not used)**	Host Serial Port Request To Send (active low)
RXD	B3	I	—	Host Serial Port Receive Data
SCLK	F1	I/O	—	Audio PCM Interface Clock
SFS	F2	I/O	—	Audio PCM Interface Frame Synchronization
SRD	F3	I	—	Audio PCM Interface Receive Data Input
STD	E3	O	—	Audio PCM Interface Transmit Data Output
TCK	B4	I	NC	JTAG Test Clock Input
TDI	B5	I	NC	JTAG Test Data Input
TDO	D5	O	NC	JTAG Test Data Output
TE	A9	I	GND	Test Enable - Used for manufacturing test only
TMS	A5	I	NC	JTAG Test Mode Select Input
TST1/DIV2#	B10	I	NC	**TST1**: Test Mode. Leave not connected to permit use with VTune automatic tuning algorithm **DIV2#**: No longer supported
TST2	C7	I	GND	Test Mode, Connect to GND
TST3	C8	I	GND	Test Mode, Connect to GND
TST4	C9	I	GND	Test Mode, Connect to GND
TST5	D8	I	GND	Test Mode, Connect to GND
TST6	D9	I	VCO_OUT	Test Input, Connect to VCO_OUT via 0-Ω resistor to permit use with VTune automatic tuning algorithm
TXD	C3	O	—	Host Serial Port Transmit Data
X1_CKI	E7	I	—	Crystal or External Clock 10-20 MHz
X1_CKO	F7	O	—	Crystal 10-20 MHz
X2_CKI	F5	I	GND **(if not used)**	32.768-kHz Crystal Oscillator
X2_CKO	E5	O	NC **(if not used)**	32.768-kHz Crystal Oscillator
XOSCEN	A6	O	—	Clock Request. Toggles with X2 (LP0) crystal enable/disable
VCC	E1	I	—	Voltage Regulator Input
VCC_CORE	C5	O	—	1.8-V Voltage Regulator Output
VCC_IO	C4	I	—	Power Supply I/O
VCC_IOP	E4	I	—	Power Supply Audio Interface
VCC_PLL	F6	O	—	1.8-V Core Logic Power Supply Output
VCO_IN	F9	I	—	VCO Tuning Input, feedback from Loop filter
VCO_OUT	F8	O	—	Charge Pump Output, connect to Loop filter
VDD_IF	A8	I	—	Power Supply IF
VDD_IOR	E6	I	—	Power Supply I/O Radio/BB
VDD_RF	A10	I	—	Power Supply RF
VDD_VCO	F10	I	—	Power Supply VCO
VDD_X1	E8	I	—	Power Supply Crystal Oscillator

(3) Treat as No Connect if RTS is not used. Pad required for mechanical stability.

Copyright © 2008–2015, Texas Instruments Incorporated

7 Specifications

7.1 Absolute Maximum Ratings[1]

The following conditions are true unless otherwise stated in the tables: T_A = -40°C to +85°C, V_{CC} = 3.3 V, and RF system performance specifications are ensured on Texas Instruments Mesa board rev 1.1 reference design platform.

		MIN	MAX	UNIT
V_{CC}	Digital Voltage Regulator input	–0.2	4	V
V_I	Voltage on any pad with GND = 0 V	–0.2	V_{CC} + 0.2	V
VDD_RF	Supply Voltage Radio	0.2	3.3	V
VDD_IF				
VDD_X1				
VDD_VCO				
P_{IN}RF	RF Input Power		0	dBm
V_{ANT}	Applied Voltage to ANT pad		1.95	V
T_L	Lead Temperature[2](solder 4 sec.)		225	°C
T_{LNOPB}	Lead Temperature NOPB[2][3](solder 40 sec.)		260	°C
T_{stg}	Storage temperature	–65	150	°C

(1) Stresses beyond those listed under *Absolute Maximum Ratings* may cause permanent damage to the device. These are stress ratings only, which do not imply functional operation of the device at these or any other conditions beyond those indicated under *Recommended Operating Conditions*. Exposure to absolute-maximum-rated conditions for extended periods may affect device reliability.
(2) Reference IPC/JDEC J-STD-20C spec.
(3) NOPB = No Pb (No Lead)

7.2 ESD Ratings

		VALUE	UNIT
$V_{(ESD)}$ Electrostatic discharge	Human body model (HBM), per ANSI/ESDA/JEDEC JS-001[1]	±2000	V
	Charged device model (CDM), per JEDEC specification JESD22-C101[2]	±1000	
	Machine model (MM)	±200[3]	

(1) JEDEC document JEP155 states that 500-V HBM allows safe manufacturing with a standard ESD control process.
(2) JEDEC document JEP157 states that 250-V CDM allows safe manufacturing with a standard ESD control process.
(3) A 200-V ESD rating applies to all pins except OP3, OP6, OP7, MDODI, SCLK, SFS, STD, TDO, and ANT pins = 150 V.

7.3 Recommended Operating Conditions

The following conditions are true unless otherwise stated in the tables: T_A = –40°C to 85°C, V_{CC} = 3.3 V, and RF system performance specifications are ensured on Texas Instruments Mesa board rev 1.1 reference design platform.

		MIN	TYP	MAX	UNIT
V_{CC}	Digital Voltage Regulator input	2.5	2.75	3.6	V
T_R	Digital Voltage Regulator Rise Time			10	µs
T_A	Ambient Operating Temperature Range	–40	25	125	°C
	Fully Functional *Bluetooth* Node				
VCC_IO	Supply Voltage Digital I/O	1.6	3.3	3.6	V
VCC_PLL	Internally connected to VCC_Core				
VDD_RF	Supply Voltage Radio	2.5	2.75	3	V
VDD_IF					
VDD_X1					
VDD_VCO					
VDD_IOR	Supply Voltage Radio I/O	1.6	2.75	VDD_RF	V
VCC_IOP	Supply Voltage PCM Interface	1.6	3.3	3.6	V
VCC_CORE	Supply Voltage Output		1.8		V
VCC_CORE_{MAX}	Supply Voltage Output Max Load		5		mA
VCC_CORE_{SHORT}	When used as Supply Input (V_{CC} grounded)	1.6	1.8	2	V

Copyright © 2008–2015, Texas Instruments Incorporated

7.4 Thermal Information

THERMAL METRIC[1]		LMX9830 NZB [NFBGA] 60 PINS	UNIT
$R_{\theta JA}$	Junction-to-ambient thermal resistance	51.0	°C/W

(1) For more information about traditional and new thermal metrics, see the *Semiconductor and IC Package Thermal Metrics* application report, SPRA953.

7.5 Power Supply Requirements[1][2]

The following conditions are true unless otherwise stated in the tables: T_A = –40°C to 85°C, V_{CC} = 3.3 V, and RF system performance specifications are ensured on Texas Instruments Mesa board rev 1.1 reference design platform.

PARAMETER		MIN	TYP[3]	MAX	UNIT
$I_{CC\text{-}TX}$	Power supply current for continuous transmit			65	mA
$I_{CC\text{-}RX}$	Power supply current for continuous receive			65	mA
I_{RXSL}	Receive Data in SPP Link, Slave[4]		26		mA
I_{RXM}	Receive Data in SPP Link, Master[4]		23		mA
I_{SnM}	Sniff Mode, Sniff interval 1 second[4]		5.6		mA
$I_{SC\text{-}TLDIS}$	Scanning, No Active Link, TL Disabled[4]		0.43		mA
I_{Idle}	Idle, Scanning Disabled, TL Disabled[4]		100		µA

(1) Power supply requirements based on Class II output power.
(2) Based on UART Baudrate 921.6 kbit/s.
(3) V_{CC} = 3.3 V, VCC_IO = 3.3 V, Ambient Temperature = 25°C.
(4) Average values excluding IO.

7.6 Digital DC Characteristics

The following conditions are true unless otherwise stated in the tables: T_A = –40°C to 85°C, V_{CC} = 3.3 V, and RF system performance specifications are ensured on Texas Instruments Mesa board rev 1.1 reference design platform.

PARAMETER		TEST CONDITIONS	MIN	MAX	UNIT
V_{IH}	Logical 1 Input Voltage high (except oscillator I/O)	1.6 V ≤ VCC_IO ≤ 3.0 V 3.0 V ≤ VCC_IO ≤ 3.6 V	0.7 x VCC_IO 2	VCC_IO + 0.2 VCC_IO + 0.2	V
V_{IL}	Logical 0 Input Voltage low	1.6 V ≤ VCC_IO ≤ 3.0 V	–0.2	0.25 x VCC_IO	V
	(except oscillator I/O)	3.0 V ≤ VCC_IO ≤ 3.6 V	–0.2	0.8	
V_{HYS}	Hysteresis Loop Width[1]		0.1 x VCC_IO		V
I_{OH}	Logical 1 Output Current	V_{OH} = 2.4 V, VCC_IO = 3.0 V	–10		mA
I_{OL}	Logical 0 Output Current	V_{OH} = 0.4 V, VCC_IO = 3.0 V	10		mA

(1) Specified by design.

Copyright © 2008–2015, Texas Instruments Incorporated

7.7 RF Receiver Performance Characteristics

In the performance characteristics tables the following applies: All tests performed are based on *Bluetooth* Test Specification revision 2.0. All tests are measured at antenna port unless otherwise specified. T_A = –40°C to 85°C, VDD_RF = 2.8 V unless otherwise specified. RF system performance specifications are ensured on Texas Instruments Mesa Board rev 1.1 reference design platform.

PARAMETER		TEST CONDITIONS		MIN	TYP(1)	MAX	UNIT
RX_{sense}	Receive Sensitivity	BER < 0.001	2.402 GHz		–80	–76	dBm
			2.441 GHz		–80	–76	dBm
			2.480 GHz		–80	–76	dBm
$P_{in}RF$	Maximum Input Level			–10	0		dBm
IMP(2)(3)	Intermodulation Performance	F1= + 3 MHz, F2= + 6 MHz, $P_{in}RF$ = –64 dBm		–38	–36		dBm
RSSI	RSSI Dynamic Range at LNA Input			–72		–52	dBm
Z_{RFIN}(3)	Input Impedance of RF Port (RF_inout)	Single input impedance F_{in} = 2.5 GHz			32		Ω
Return Loss(3)	Return Loss					–8	dB
OOB(2)(3)	Out Of Band Blocking Performance	$P_{in}RF$ = –10 dBm, 30 MHz < F_{CWI} < 2 GHz, BER < 0.001		–10			dBm
		$P_{in}RF$ = –27 dBm, 2000 MHz < F_{CWI} < 2399 MHz, BER < 0.001		–27			dBm
		$P_{in}RF$ = –27 dBm, 2498 MHz < F_{CWI} < 3000 MHz, BER < 0.001		–27			dBm
		$P_{in}RF$ = –10 dBm, 3000 MHz < F_{CWI} < 12.75 GHz, BER < 0.001		–10			dBm

(1) Typical operating conditions are at 2.75 V operating voltage and 25°C ambient temperature.
(2) The f_0 = –64 dBm *Bluetooth* modulated signal, f_1 = –39 dbm sine wave, f_2 = –39 dBm *Bluetooth* modulated signal, $f_0 = 2f_1 - f_2$, and $|f_2 - f_1|$ = n * 1 MHz, where n is 3, 4, or 5. For the typical case, n = 3.
(3) Not tested in production.

7.8 RF Transmitter Performance Characteristics

In the performance characteristics tables the following applies: All tests performed are based on *Bluetooth* Test Specification revision 2.0. All tests are measured at antenna port unless otherwise specified. T_A = –40°C to 85°C, VDD_RF = 2.8 V unless otherwise specified. RF system performance specifications are ensured on Texas Instruments Mesa Board rev 1.1 reference design platform.

PARAMETER		TEST CONDITIONS	MIN	TYP(1)	MAX	UNIT
$P_{OUT}RF$	Transmit Output Power	2.402 GHz	−4	0	+3	dBm
		2.441 GHz	−4	0	+3	dBm
		2.480 GHz	−4	0	+3	dBm
MOD $\Delta F1_{AVG}$	Modulation Characteristics	Data = 00001111	140	165	175	kHz
MOD $\Delta F2_{MAX}$(2)	Modulation Characteristics	Data = 10101010	115	125		kHz
$\Delta F2_{AVG}/DF1_{AVG}$(3)	Modulation Characteristics		0.8			kHz
20 dB Bandwidth					1000	kHz
$P_{OUT}2*f_o$(4)	PA 2nd Harmonic Suppression	Maximum gain setting: f_0 = 2402 MHz, P_{out} = 4804 MHz			-30	dBm
Z_{RFOUT}(5)	RF Output Impedance/Input Impedance of RF Port (RF_inout)	P_{out} @ 2.5 GHz		47		Ω

(1) Typical operating conditions are at 2.75 V operating voltage and 25°C ambient temperature.
(2) ΔF2max ≥ 115 kHz for at least 99.9% of all Δf2max.
(3) Modulation index set between 0.28 and 0.35.
(4) Out-of-Band spurs only exist at 2nd and 3rd harmonics of the CW frequency for each channel.
(5) Not tested in production.

Copyright © 2008–2015, Texas Instruments Incorporated

7.9 RF Synthesizer Performance Characteristics

In the performance characteristics tables the following applies: All tests performed are based on *Bluetooth* Test Specification revision 2.0. All tests are measured at antenna port unless otherwise specified. T_A = –40°C to 85°C, VDD_RF = 2.8 V unless otherwise specified. RF system performance specifications are ensured on Texas Instruments Mesa Board rev 1.1 reference design platform.

PARAMETER		TEST CONDITIONS	MIN	TYP	MAX	UNIT
f_{VCO}	VCO Frequency Range		2402		2480	MHz
t_{LOCK}	Lock Time	f_0 ± 20 kHz		120		µs
Δf_0offset (1)	Initial Carrier Frequency Tolerance	During preamble	-75	0	75	kHz
Δf_0drift (1)	Initial Carrier Frequency Drift	DH1 data packet	-25	0	25	kHz
		DH3 data packet	-40	0	40	kHz
		DH5 data packet	-40	0	40	kHz
		Drift Rate	-20	0	20	kHz/50µs
t_D - TX	Transmitter Delay Time	From TX data to antenna		4		µs

(1) Frequency accuracy is dependent on crystal oscillator chosen. The crystal must have a cumulative accuracy of < ±20 ppm to meet *Bluetooth* specifications.

7.10 Typical Characteristics

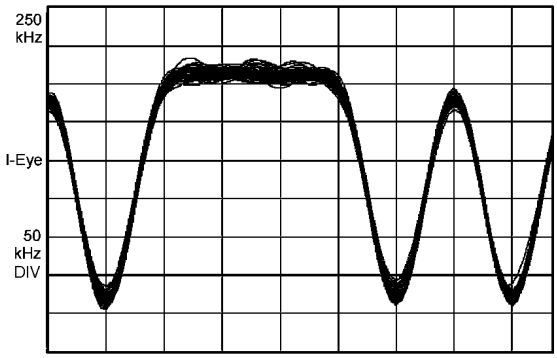

Figure 1. Modulation

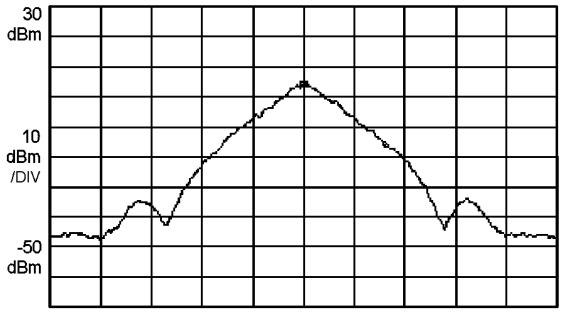

Figure 2. Transmit Spectrum

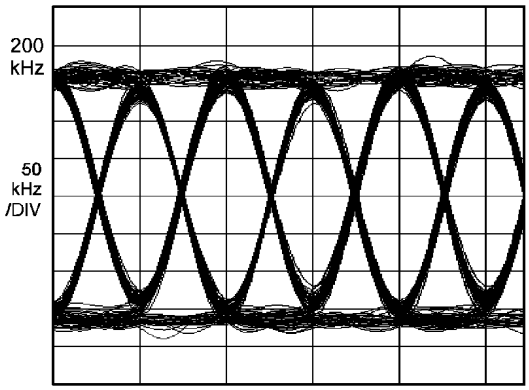

Figure 3. Corresponding Eye Diagram

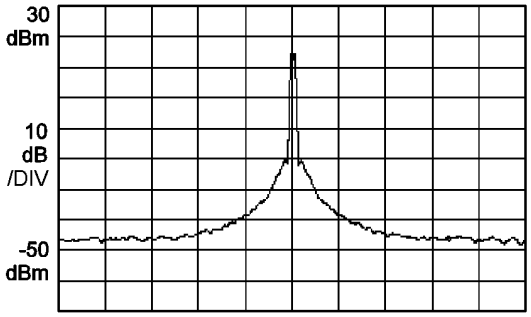

Figure 4. Synthesizer Phase Noise

Copyright © 2008–2015, Texas Instruments Incorporated

8 Parameter Measurement Information

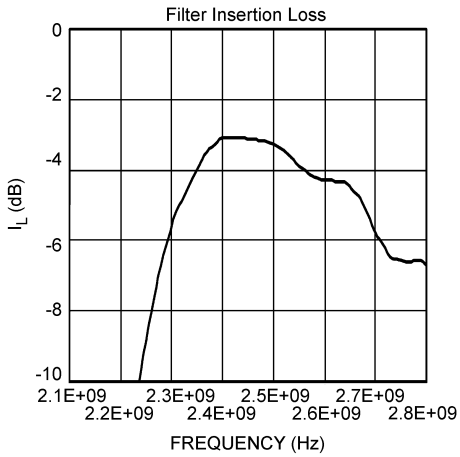

Figure 5. Front-End Bandpass Filter Response

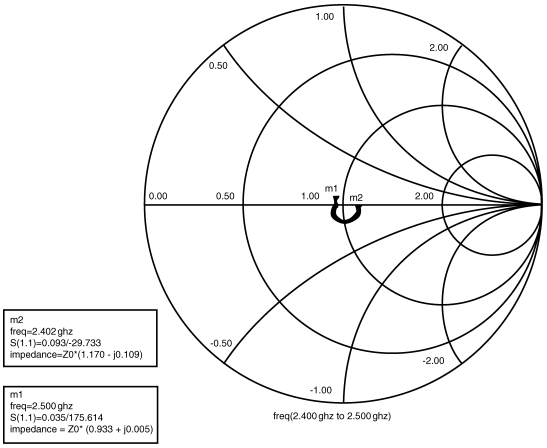

Figure 6. TX and RX Pin 50-Ω Impedance Characteristics

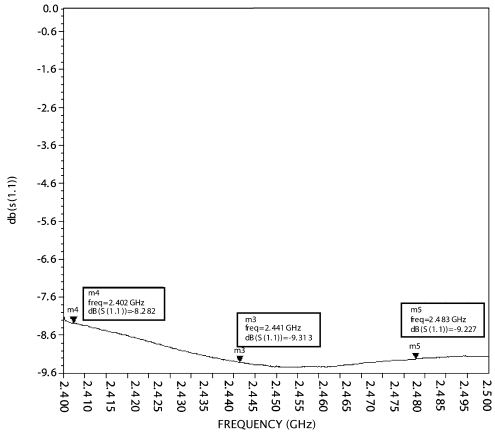

Figure 7. Transceiver Return Loss

9 Detailed Description

9.1 Overview

LMX9830 is a highly compact *Bluetooth* 2.0 module solution, with integrated radio, controller, and processor. The built-in *Bluetooth* stacks up to the application layer allows users to communicate directly with SPP commands, and develop additional SPP-based *Bluetooth* profiles on Host through UART interface.

9.2 Functional Block Diagram

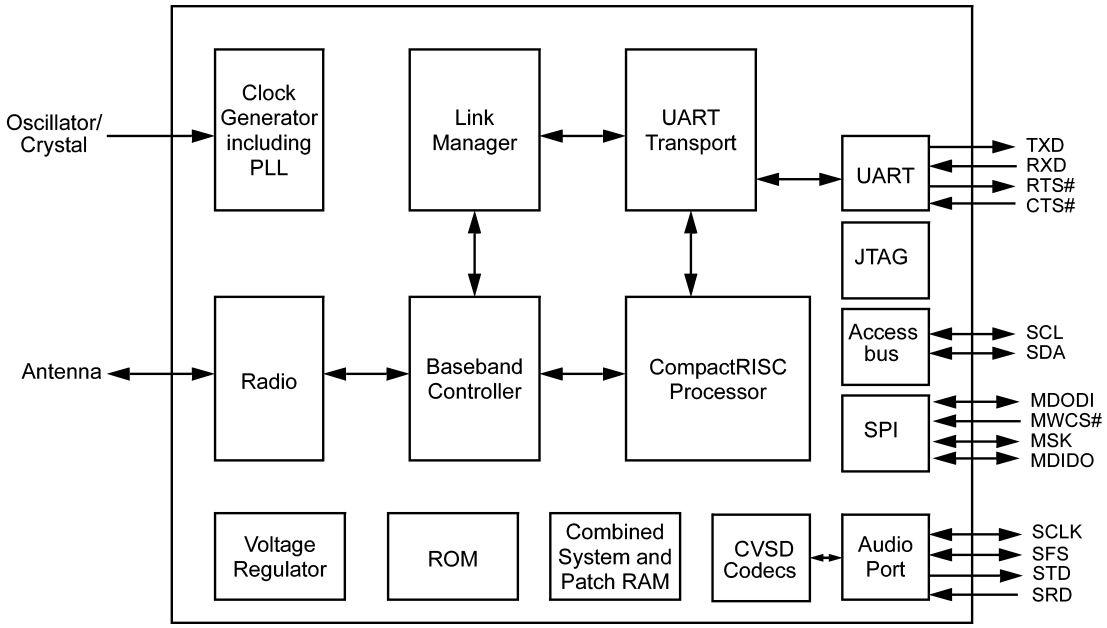

9.3 Feature Description

9.3.1 Feature Overview

The firmware supplied in the on-chip ROM memory offers a complete *Bluetooth* (v2.0) stack including profiles and command interface. This firmware features point-to-point and point-to-multipoint link management supporting data rates up to the theoretical maximum over RFComm of 704 kbps (**Best in Class** in the industry). The internal memory supports up to 7 active *Bluetooth* data links and one active SCO link.

The on-chip Patch RAM provided for lowest cost and risk, allows the flexibility of a firmware upgrade.

The LMX9830 module is lead free and RoHS (Restriction of Hazardous Substances) compliant. For more information on those quality standards, visit TI's green compliance website at http://focus.ti.com/quality/docs/qualityhome.tsp

Copyright © 2008–2015, Texas Instruments Incorporated

Feature Description (continued)

9.3.1.1 Hardware

- Baseband and Link Management Processors
- CompactRISC Core
- Embedded ROM and Patch RAM Memory
- UART Command/Data Port:
  - Support for up to 921.6 k Baud Rate
- Auxiliary Host Interface Ports:
  - Link Status
  - Transceiver Status (TX or RX)
  - Three General Purpose I/Os, Available through the API
  - Alternative IO Functions:
    - Link Status
    - Transport Layer Activity
- Advanced Power Management (APM) Features:
  - Advanced Power Management functions
- Advanced Audio Interface for External PCM Codec
- ACCESS.Bus and SPI/Microwire for Interfacing with External Nonvolatile Memory

9.3.1.2 Firmware

- Complete *Bluetooth* Stack including:
  - Baseband and Link Manager
  - L2CAP, RFCOMM, SDP
  - Profiles:
    - GAP
    - SDAP
    - SPP
- Additional Profile support on Host, for example:
  - Dial Up Networking (DUN)
  - Facsimile Profile (FAX)
  - File Transfer Protocol (FTP)
  - Object Push Profile (OPP)
  - Synchronization Profile (SYNC)
  - Headset (HSP)
  - Handsfree Profile (HFP)
  - Basic Imaging Profile (BIP)
  - Basic Printing Profile (BPP)
- On-Chip application including:
  - Default connections
  - Command Interface:
    - Link setup and configuration (also Multipoint)
    - Configuration of the module
    - Service database modifications
  - UART Transparent mode
  - Optimized cable replacement :
    - Automatic transparent mode
    - Event filter

Copyright © 2008–2015, Texas Instruments Incorporated

Feature Description (continued)

9.3.1.3 Highly Integrated Digital Technology

- Accepts external clock or crystal input:
  - 13 MHz Typical
  - Supports 10 - 20 MHz
  - Secondary 32.768-kHz oscillator for low-power modes
  - 20 ppm cumulative clock error required for *Bluetooth*
- Synthesizer:
  - Integrated VCO
  - Provides all clocking for radio and baseband functions
- Antenna Port (50 Ω nominal impedance):
  - Embedded front-end filter for enhanced out of band performance
- Integrated transmit/receive switch (full duplex operation via antenna port)
- Better than –80 dBm input sensitivity
- 0 dBm typical output power

9.3.1.4 Physical

- Compact size - 6.1 mm × 9.1 mm × 1.2 mm
- Complete system interface provided in Ball Grid Array on underside for surface mount assembly

9.3.2 Baseband and Link Management Processors

Baseband and Lower Link control functions are implemented using a combination of TI's CompactRISC 16-bit processor and the *Bluetooth* Lower Link Controller. These processors operate from integrated ROM memory and RAM and execute on-board firmware implementing all *Bluetooth* functions.

9.3.2.1 Bluetooth Lower Link Controller

The integrated *Bluetooth* Lower Link Controller (LLC) complies with the *Bluetooth* Specification version 2.0 and implements the following functions:

- Adaptive Frequency Hopping
- Interlaced Scanning
- Fast Connect
- Support for 1, 3, and 5 slot packet types
- 79 Channel hop frequency generation circuitry
- Fast frequency hopping at 1600 hops per second
- Power management control
- Access code correlation and slot timing recovery

9.3.2.2 Bluetooth Upper Layer Stack

The integrated upper layer stack is prequalified and includes the following protocol layers:

- L2CAP
- RFComm
- SDP

9.3.2.3 Profile Support

The on-chip application of the LMX9830 allows full stand-alone operation, without any *Bluetooth* protocol layer necessary outside the module. It supports the Generic Access Profile (GAP), the Service Discovery Application Profile (SDAP), and the Serial Port Profile (SPP).

The on-chip profiles can be used as interfaces to additional profiles executed on the host. The LMX9830 includes a configurable service database to answer requests with the profiles supported.

Copyright © 2008–2015, Texas Instruments Incorporated

Feature Description (continued)

9.3.2.4 Application With Command Interface

The module supports automatic slave operation eliminating the need for an external control unit. The implemented transparent option enables the chip to handle incoming data raw, without the need for packaging in a special format. The device uses a pin to block unallowed connections. This pincode can be fixed or dynamically set.

Acting as master, the application offers a simple but versatile command interface for standard *Bluetooth* operation-like inquiry, service discovery, or serial port connection. The firmware supports up to seven slaves. Default Link Policy settings and a specific master mode allow optimized configuration for the application specific requirements. See also *Integrated Firmware*.

9.3.2.5 Memory

The LMX9830 introduces 16 kB of combined system and Patch RAM memory that can be used for data and/or code upgrades of the ROM based firmware. Due to the flexible start-up used for the LMX9830 operating parameters like the *Bluetooth* Device Address (BD_ADDR) are defined during boot time. This allows reading out the parameters of an external EEPROM or programming them directly over UART.

9.3.2.6 External Memory Interfaces

As the LMX9830 is a ROM based device with no on-chip non volatile storage, the operation parameters will be lost after a power cycle or hardware reset. In order to prevent re initializing such parameters, patches or even user data, the LMX9830 offers two interfaces to connect an external EEPROM to the device:

- µ-wire/SPI
- Access.bus (I^2C compatible)

The selection of the interface is done during start-up based on the option pins. See Table 8 for the option pin descriptions.

9.3.2.7 µ-wire/SPI Interface

In case the firmware is configured by the option pins to use a µ-wire/SPI EEPROM, the LMX9830 will activate that interface and try to read out data from the EEPROM. The external memory must be compatible to the reference listed in Table 1. The largest size EEPROM supported is limited by the addressing format of the selected NVM.

The device must have a page size equal to N x 32 bytes.

The firmware requires that the EEPROM supports Page write. Clock must be HIGH when idle.

Table 1. M95640-S EEPROM 8k x 8

PARAMETER	VALUE
Supplier	ST Microelectronics
Supply Voltage (1)	1.8 - 3.6 V
Interface	SPI compatible (positive clock SPI Modes)
Memory Size	8k x 8, 64 kbit
Clock Rate (1)	2 MHz
Access	Byte and Page Write (up to 32 bytes)

(1) Parameter range reduced to requirements of TI reference design.

9.3.2.8 Access.bus Interface

In case the firmware is configured by the option pins to use an access.bus or I^2C compatible EEPROM, the LMX9830 will activate that interface and try to read out data from the EEPROM. The external memory must be compatible to the reference listed in Table 2.

The largest size EEPROM supported is limited by the addressing format of the selected NVM. The device must have a page size equal to N x 32 bytes.

The device uses a 16 bit address format. The device address must be “000”.

Table 2. 24C64 EEPROM 8kx8

PARAMETER	VALUE
Supplier	Atmel
Supply Voltage (1)	2.7 - 5.5 V
Interface	2 wire serial interface
Memory Size	8K x 8, 64 kbit
Clock Rate (1)	100 kHz
Access	32 Byte Page Write Mode

(1) Parameter range reduced to requirements of TI reference design.

9.3.3 Transport Port - UART

The LMX9830 provides one Universal Asynchronous Receiver Transmitter (UART). The UART interface consists out of Receive (RX), Transmit (TX), Ready-to-Send (RTS) and Clear-to-Send signals. RTS and CTS are used for hardware handshaking between the host and the LMX9830. Because the LMX9830 acts as gateway between the *Bluetooth* and the UART interface, TI recommends to use the handshaking signals especially for transparent operation. In case two signals are used CTS must be pulled to GND. Also see the *LMX9830 Software User’s Guide* for detailed information on 2-wire operation.

The UART interface supports formats of 8-bit data with or without parity, with one or two stop bits. It can operate at standard baud rates from 2400 bits/s up to a maximum baud rate of 921.6 kbits/s. DMA transfers are supported to allow for fast processor independent receive and transmit operation.

The UART baudrate is configured during start-up by checking option pins OP3, OP4 and OP5 for reference clock and baudrate. In case Auto baud rate detect is chosen, the firmware check the NVS area if a valid UART baudrate has been stored in a previous session. In case, no useful value can be found the device will switch to auto baud rate detection and wait for an incoming reference signal.

The UART offers wakeup from the power save modes via the multi-input wakeup module. When the LMX9830 is in low power mode, RTS# and CTS# can function as Host_WakeUp and *Bluetooth*_WakeUp respectively. Table 3 represents the operational modes supported by the firmware for implementing the transport via the UART.

Table 3. UART Operation Modes

ITEM	RANGE	DEFAULT AT POWER UP	WITH AUTO-DETECT
Baud Rate	2.4 to 921.6 kbits/s	Either configured by option pins, NVS parameter or auto baud rate detection	2.4 to 921.6 kbits/s
Flow Control	RTS#/CTS# or None	RTS#/CTS#	RTS#/CTS#
Parity	Odd, Even, None	None	None
Stop Bits	1,2	1	1
Data Bits	8	8	8

9.3.4 Audio Port

9.3.4.1 Advanced Audio Interface

The Advanced Audio Interface (AAI) is an advanced version of the Synchronous Serial Interface (SSI) that provides a full-duplex communications port to a variety of industry-standard 13/14/15/16-bit linear or 8-bit log PCM codecs, DSPs, and other serial audio devices.

The interface allows the support one codec or interface. The firmware selects the desired audio path and interface configuration by a parameter that is located in RAM (imported from nonvolatile storage or programmed during boot-up). The audio path options include the Motorola MC145483 codec, the OKI MSM7717 codec, the Winbond W681360/W681310 codecs and the PCM slave through the AAI.

In case an external codec or DSP is used the LMX9830 audio interface generates the necessary bit and frame clock driving the interface.

Copyright © 2008–2015, Texas Instruments Incorporated

Table 4 summarizes the audio path selection and the configuration of the audio interface at the specific modes.

The LMX9830 supports one SCO link.

Table 4. Audio Path Configuration

AUDIO SETTING	INTERFACE	FREQ	FORMAT	AAI BIT CLOCK	AAI FRAME CLOCK	AAI FRAME SYNC PULSE LENGTH
OKI MSM7717	Advanced audio interface	ANY (1)	8-bit log PCM (a-law only)	480 kHz	8 kHz	14 Bits
Motorola MC145483 (2)	Advanced audio interface		13-bit linear	480 kHz	8 kHz	13 Bits
OKI MSM7717	Advanced audio interface	13 MHz	8-bit log PCM (a-law only)	520 kHz	8 kHz	14 Bits
Motorola MC145483 (2)	Advanced audio interface		13-bit linear	520 kHz	8 kHz	13 Bits
Winbond W681310	Advanced audio interface	13 MHz	8 bit log PCM A-law and μ-law	520 kHz	8 kHz	14 Bits
Winbond W681360	Advanced audio interface	13 MHz	13-bit linear	520 kHz	8 kHz	13 Bits
PCM slave (3)	Advanced audio interface	ANY (1)	8/16 bits	128 - 1024 kHz	8 kHz	8/16 Bits

(1) For supported frequencies see Table 12.
(2) Due to internal clock divider limitations the optimum of 512 kHz, 8 kHz can not be reached. The values are set to the best possible values. The clock mismatch does not result in any discernible loss in audio quality.
(3) In PCM slave mode, parameters are stored in NVS. Bit clock and frame clock must be generated by the host interface.

PCM slave configuration example: PCM slave uses the slot 0, 1 slot per frame, 16 bit linear mode, long frame sync, normal frame sync. In this case, 0x03E0 should be stored in NVS. See “LMX9830 Software Users Guide” for more details.

9.3.5 Auxiliary Ports

9.3.5.1 RESET#

There are two reset inputs: RESET_RA# for the radio and RESET_BB# for the baseband. Both are active low.

There is also a reset output, B_RESET_RA# (Buffered Radio Reset) active low. This output follows input RESET_RA#.

When RESET_RA# is released, going high, B_RESET_RA# stays low until the clock has started.

See *System Power-Up* for details.

9.3.5.2 General Purpose I/Os

The LMX9830 offers 3 pins which either can be used as indication and configuration pins or can be used for General Purpose functionality. The selection is made out of settings derived out of the power-up sequence.

In General Purpose configuration the pins are controlled hardware specific commands giving the ability to set the direction, set them to high or low or enable a weak pullup.

In alternate function the pins have predefined indication functionality. See Table 5 for a description on the alternate indication functionality.

Table 5. Alternate GPIO Pin Configuration

PIN	DESCRIPTION
OP4/PG4	Operation Mode pin to configure Transport Layer settings during boot-up
PG6	GPIO
PG7	RF Traffic indication

Copyright © 2008–2015, Texas Instruments Incorporated

9.3.6 System Power Up

In order to correctly power up the LMX9830, the following sequence is recommended to be performed:

Apply VCC_IO and V_{CC} to the LMX9830.

The RESET_RA# should be driven high. Then RESET_BB# should be driven high at a recommended time of 1 ms after the LMX9830 voltage rails are high. The LMX9830 is properly reset.

See Figure 8.

ESR of the crystal also has impact on the start-up time of the crystal oscillator circuit of the LMX9830 (See Table 6 and Table 7).

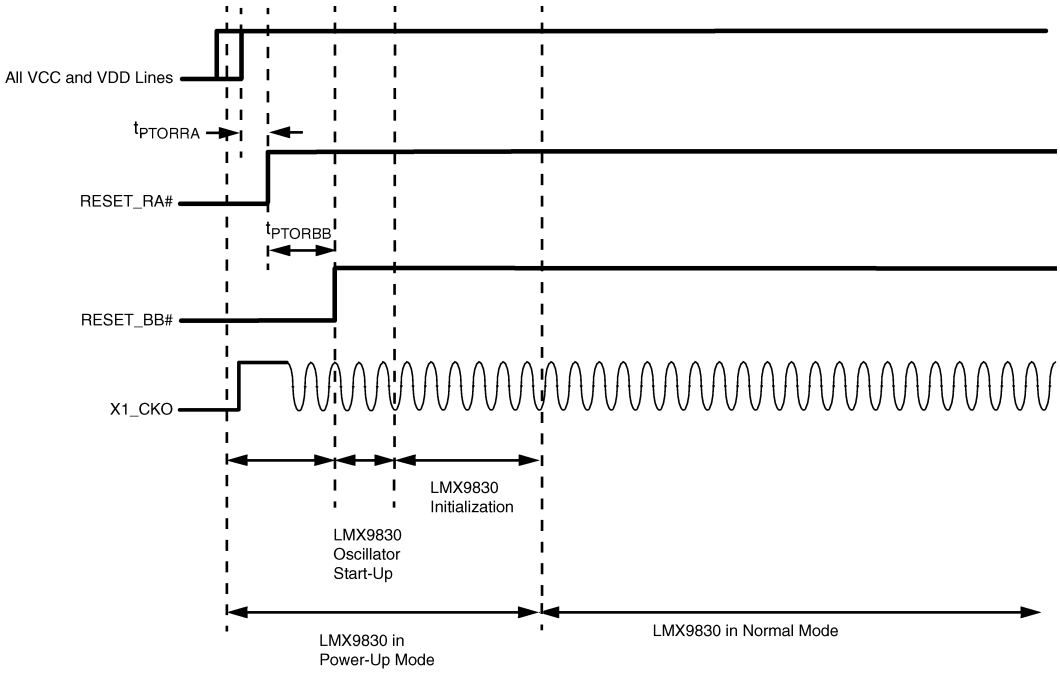

Figure 8. LMX9830 Power-On Reset Timing

Table 6. LMX9830 Power to Reset Timing

SYMBOL	PARAMETER	CONDITION	MIN	TYP	MAX	UNIT
t_{PTORRA}	Power to Reset _RA#	V_{CC} and VCC_IO at operating voltage level to valid reset	<500 (1)			µs
t_{PTORBB}	Reset_RA# to Reset_BB#	V_{CC} and VCC_IO at operating voltage level to valid reset	1 (2)			ms

(1) Rise time on power must switch on fast, rise time <500 µs.
(2) Recommended value.

Table 7. ESR vs Start-up Time

ESR (Ω)	TYPICAL (1) (2)	UNIT
10	12	ms
25	13	ms
40	16	ms
50	24	ms
80	30	ms

(1) Frequency, loading caps and ESR all must be considered for determining start-up time.
(2) For reference only, must be tested on each system to accurately design POR and correctly start up system.

Copyright © 2008–2015, Texas Instruments Incorporated

9.3.7 Start-up Sequence

During start-up, the LMX9830 checks the options register pins OP3 to OP7 for configuration on operation mode, external clock source, transport layer and available nonvolatile storage PROM.

The different options for start-up are described in Table 8.

9.3.7.1 Options Register

External pads in Table 8 are latched in this register at the end of Reset. The Options register can be read by firmware at any time.

All pads are inputs with weak on-chip pullup/down resistors during Reset. Resistors are disconnected at the end of RESET_BB#.

1 = Pullup resistor connected in application

0 = Pulldown resistor connected in application

x = Don't care

9.3.7.2 Start-up With External PROM Available

To be able to read out information from an external PROM the option pins must be set according to Table 8.

Start-up sequence activities:

1. From the Options registers OP6 and OP7, the LMX9830 checks if a serial PROM is available to use (ACCESS.bus or Microwire).
2. If serial PROM is available, the permanent parameter block, patch block, and nonvolatile storage (NVS) are read from it. If the BD Address is not present, enter the BD address to be saved in the NVS. For more information see *Configuring the LMX9830 Through Transport Layer*.
3. From the Options register OP3, OP4 and OP5, the LMX9830 checks for clocking information and transport layer settings. If the NVS information are not sufficient, the LMX9830 will send the "Await Initialization" event on the TL (Transport Layer) and wait for additional information (see *Start-up Without External PROM Available*.)
4. The LMX9830 compensates the UART for new BBCLK information from the NVS.
5. The LMX9830 starts up the *Bluetooth* core.

9.3.7.3 Start-up Without External PROM Available

The following sequence will take place if OP6 and OP7 have been set to "No external memory" as described in Table 8.

Start-up sequence activities:

1. From the Options registers OP6 and OP7, the LMX9830 checks if a serial PROM is available to use.
2. From the Options register OP3, OP4 and OP5, the LMX9830 checks for clocking mode and transport layer.
3. The LMX9830 sends the "Await Initialization" Event on the TL (Transport Layer) and waits for NVS configuration commands. The configuration is finalized by sending the "Enter *Bluetooth* Mode" command.
4. The LMX9830 compensates the UART for new BBCLK information from the NVS.
5. The LMX9830 starts up the *Bluetooth* core.

Copyright © 2008–2015, Texas Instruments Incorporated

Table 8. Start-up Sequence Options (1)

PACKAGE PAD						COMMENT
OP3	OP4	OP5	OP6 (2)	OP7 (3)	ENV1#	
PD	PD	PD	PD	PD	PU	PD = Internal Pulldown during Reset PU = Internal Pullup during Reset
x	x	x	Open (0)	Open (0)	Open (1) BBCLK	No serial memory
x	x	x	1	Open (0)	Open (1) BBCLK	Reserved
x	x	x	Open (0)	1	Open (1) BBCLK	Microwire serial memory
x	x	x	1	1	Open (1) BBCLK	ACCESS.bus serial memory
T_SCLK	x	x	T_RFDATA	T_RFCE	0 BBCLK	Test mode

(1) 1/0 pullup/down resistor connected in application.
(2) If OP6 is 1, must use 1-kΩ pullup, If OP6 is 0, must use 10-kΩ pulldown.
(3) If OP7 is 1, must use 1-kΩ pullup.

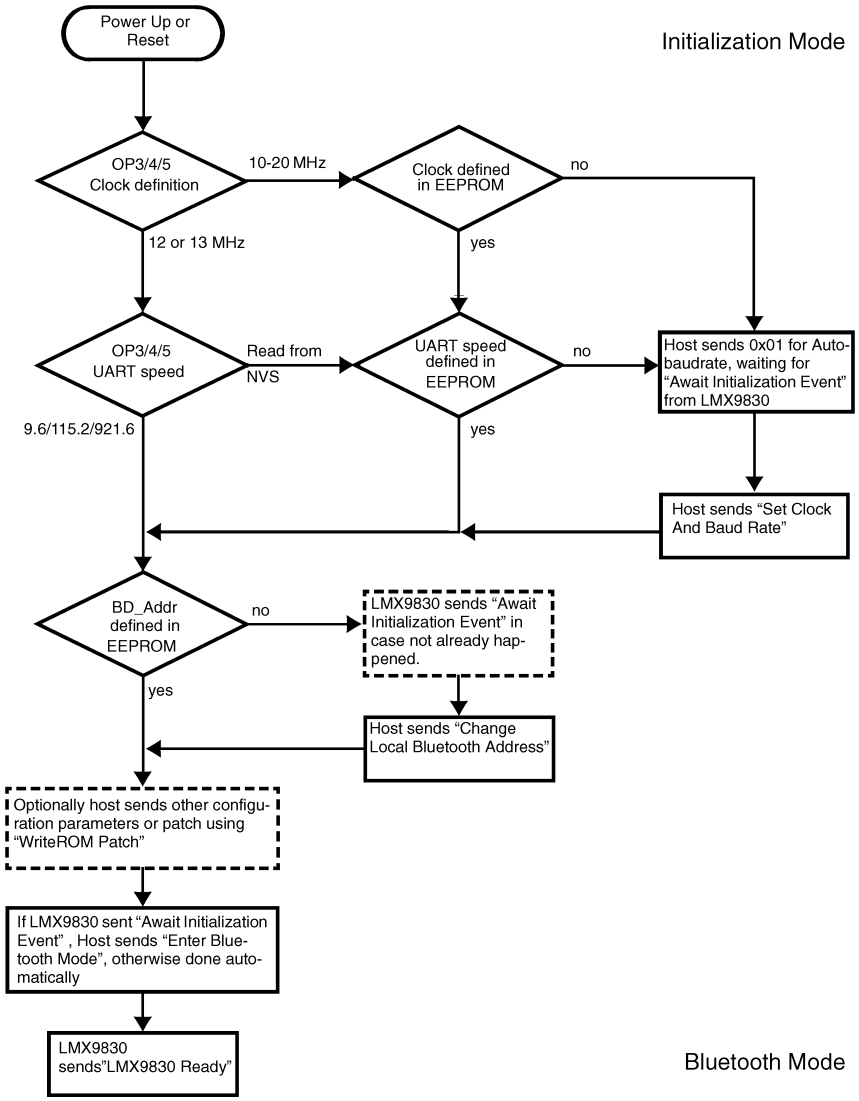

Figure 9. Flow Diagram for the Start-Up Sequence

Copyright © 2008–2015, Texas Instruments Incorporated

Table 9. Fixed Frequencies

OSC FREQ. (MHz)	BBCLK (MHz)	PLL (48 MHz)	OP3 (1)	OP4 (2)	OP5 (3)	FUNCTION
12	12	OFF	0	0	0	UART speed read from NVS
10-20 (4)	10-20 (1)	ON	0	1	0	Clock and UART baudrate detection
13	13	OFF	1	0	0	UART speed read from NVS
13	13	OFF	1	0	1	UART speed 9.6 kbps
13	13	OFF	1	1	0	UART speed 115.2 kbps
13	13	OFF	1	1	1	UART speed 921.6 kbps

(1) If OP3 is 1, must use 1-kΩ pullup.
(2) If OP4 is 1, must use 1-kΩ pullup.
(3) If OP5 is 1, must use 1-kΩ pullup.
(4) Supported frequencies see Table 13.

9.3.7.4 Configuring the LMX9830 Through Transport Layer

As described in *System Power-Up*, the LMX9830 will check during start-up the Options Registers if an external PROM is available. If the information on the PROM are incomplete or no PROM is installed the LMX9830 will boot into the “initialization Mode”.

The mode is confirmed by the “Await Initialization” Event.

The following information are needed to enter *Bluetooth* Mode:

- *Bluetooth* Device Address (BD_Addr)
- External clock source (only if 10 - 20 MHz has been selected)
- UART Baudrate (only if Auto baudrate detection has been selected)

In general the following procedure will initialize the LMX9830:

1. Wait for “Await initialization” Event
   – Event will only appear if transport layer speed is set or after successful baudrate detection.
2. Send “Set Clock and Baudrate” Command only if the clock speed is not known through hardware configuration **(i.e only if OP3, OP4, OP5 = 0 1 0)**.
3. Send “Write BD_Addr” to Configure Local *Bluetooth* Device Address.
4. Send “Enter *Bluetooth* Mode”
   – LMX9830 will use configured clock and UART speed and start the command interface.

Note: In case no EEPROM is used, BDAddr, clock source and Baudrate are only valid until the next power-cycle or hardware reset.

9.3.7.5 Auto Baud Rate Detection

The LMX9830 supports an Automatic Baudrate Detection in case the external clock is different to 12, 13 MHz or the range 10-20 MHz or the baudrate is different to 9.6 kbps, 115.2 or 921.6 kbit/s.

The baudrate detection is based on the measurement of one character. The following issues need to be considered:

- The flow control pin CTS must be low or else the host is in flow stop.
- The Auto Baudrate Detector measures the length of the 0x01 character from the positive edge of bit 0 to the positive edge of stop bit.
- Therefore the very first received character must always be a 0x01.
- The host can restrict itself to send only a 0x01 character or also can send a command.
- The host must flush the TX buffer within 50-100 milliseconds depend on clock frequency on the host controller.
- After 50-100 milliseconds the UART is about to be initialized and short after the host should receive a “Await Initialization” Event or an “Command Status” Event.

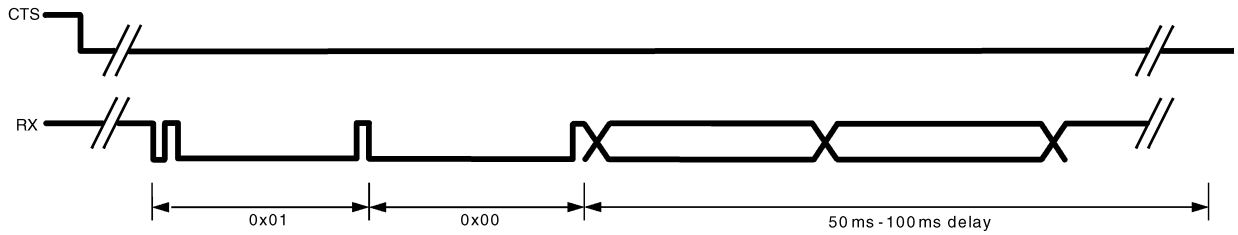

Figure 10. Auto Baudrate Detection Timing Diagram

9.3.8 Using an External EEPROM for Nonvolatile Data

The LMX9830 offers two interfaces to connect to external memory. Depending on the EEPROM used, the interface is activated by setting the correct option pins during start-up. See Table 8 for the option pin settings.

The external memory is used to store mandatory parameters like the BD_Address as well as many optional parameters like Link Keys or even User data.

The NVM is organized with fixed addresses for the parameters. Because of that the EEPROM can be preprogrammed with default parameters in manufacturing. Refer to Table 36 for the organization of the NVS map.

In case the external memory is empty on first start-up, the LMX9830 will behave as like no memory is connected. (See *Start-up Without External PROM Available*). During the start-up process, parameters can be written directly to the EEPROM to be available after next bootup. On first bootup, the EEPROM will be automatically programmed to default values, including the UART speed of 9600 BPS. Patches supplied over the TL will be stored automatically into the EEPROM.

9.3.9 Integrated Firmware

The LMX9830 includes the full *Bluetooth* stack up to RFComm to support the following profiles:

- GAP (Generic Access Profile)
- SDAP (Service Discovery Application Profile)
- SPP (Serial Port Profile)

Figure 11 shows the *Bluetooth* protocol stack with command interpreter interface. The command interpreter offers a number of different commands to support the functionality given by the different profiles. Execution and interface timing is handled by the control application.

The chip has an internal data area in RAM that includes the parameters shown in Table 36.

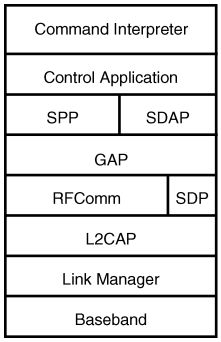

Figure 11. LMX9830 Software Implementation

Copyright © 2008–2015, Texas Instruments Incorporated

9.3.10 Digital Smart Radio

9.3.10.1 Functional Description

The integrated Digital Smart Radio uses a heterodyne receiver architecture with a low intermediate frequency (2 MHz) such that the intermediate frequency filters can be integrated on chip. The receiver consists of a low-noise amplifier (LNA) followed by two mixers. The intermediate frequency signal processing blocks consist of a poly-phase bandpass filter (BPF), two hard-limiters (LIM), a frequency discriminator (DET), and a post-detection filter (PDF). The received signal level is detected by a received signal strength indicator (RSSI).

The received frequency equals the local oscillator frequency (fLO) plus the intermediate frequency (fIF):

fRF = fLO + fIF (supradyne).

The radio includes a synthesizer consisting of a phase detector, a charge pump, an (off-chip) loop-filter, an RF-frequency divider, and a voltage controlled oscillator (VCO).

The transmitter uses IQ-modulation with bit-stream data that is gaussian filtered. Other blocks included in the transmitter are a VCO buffer and a power amplifier (PA).

9.3.10.2 Receiver Front-End

The receiver front-end consists of a low-noise amplifier (LNA) followed by two mixers and two low-pass filters for the I- and Q-channels.

The intermediate frequency (IF) part of the receiver front-end consists of two IF amplifiers that receive input signals from the mixers, delivering balanced I- and Q-signals to the poly-phase bandpass filter. The poly-phase bandpass filter is directly followed by two hard-limiters that together generate an AD-converted RSSI signal.

9.3.10.2.1 Poly-Phase Bandpass Filter

The purpose of the IF bandpass filter is to reject noise and spurious (mainly adjacent channel) interference that would otherwise enter the hard limiting stage. In addition, it takes care of the image rejection.

The bandpass filter uses both the I- and Q-signals from the mixers. The out-of-band suppression should be higher than 40 dB (f<1 MHz, f>3 MHz). The bandpass filter is tuned over process spread and temperature variations by the autotuner circuitry. A 5th order Butterworth filter is used.

9.3.10.2.2 Hard-Limiter and RSSI

The I- and Q-outputs of the bandpass filter are each followed by a hard-limiter. The hard-limiter has its own reference current. The RSSI (Received Signal Strength Indicator) measures the level of the RF input signal.

The RSSI is generated by piece-wise linear approximation of the level of the RF signal. The RSSI has a mV/dB scale, and an analog-to-digital converter for processing by the baseband circuit. The input RF power is converted to a 5-bit value. The RSSI value is then proportional to the input power (in dBm).

The digital output from the ADC is sampled on the BPKTCTL signal low-to-high transition.

9.3.10.3 Receiver Back-End

The hard-limiters are followed by a two frequency discriminators. The I-frequency discriminator uses the 90× phase-shifted signal from the Q-path, while the Q-discriminator uses the 90× phase-shifted signal from the I-path. A poly-phase bandpass filter performs the required phase shifting. The output signals of the I- and Q-discriminator are substracted and filtered by a low-pass filter. An equalizer is added to improve the eye-pattern for 101010 patterns.

After equalization, a dynamic AFC (automatic frequency offset compensation) circuit and slicer extract the RX_DATA from the analog data pattern. It is expected that the Eb/No of the demodulator is approximately 17 dB.

9.3.10.3.1 Frequency Discriminator

The frequency discriminator gets its input signals from the limiter. A defined signal level (independent of the power supply voltage) is needed to obtain the input signal. Both inputs of the frequency discriminator have limiting circuits to optimize performance. The bandpass filter in the frequency discriminator is tuned by the autotuning circuitry.

Copyright © 2008–2015, Texas Instruments Incorporated

9.3.10.3.2 Post-Detection Filter and Equalizer

The output signals of the FM discriminator first go through a post-detection filter and then through an equalizer. Both the post-detection filter and equalizer are tuned to the proper frequency by the autotuning circuitry. The post-detection filter is a low-pass filter intended to suppress all remaining spurious signals, such as the second harmonic (4 MHz) from the FM detector and noise generated after the limiter.

The post-detection filter also helps for attenuating the first adjacent channel signal. The equalizer improves the eye-opening for 101010 patterns. The post-detection filter is a third order Butterworth filter.

9.3.10.4 Autotuning Circuitry

The autotuning circuitry is used for tuning the bandpass filter, the detector, the post-detection filter, the equalizer, and the transmit filters for process and temperature variations. The circuit also includes an offset compensation for the FM detector.

9.3.10.5 Synthesizer

The synthesizer consists of a phase-frequency detector, a charge pump, a low-pass loop filter, a programmable frequency divider, a voltage-controlled oscillator (VCO), a delta-sigma modulator, and a lookup table.

The frequency divider consists of a divide-by-2 circuit (divides the 5 GHz signal from the VCO down to 2.5 GHz), a divide-by-8-or-9 divider, and a digital modulus control. The delta-sigma modulator controls the division ratio and also generates an input channel value to the lookup table.

9.3.10.5.1 Phase-Frequency Detector

The phase-frequency detector is a 5-state phase-detector. It responds only to transitions, hence phase-error is independent of input waveform duty cycle or amplitude variations. Loop lockup occurs when all the negative transitions on the inputs, F_REF and F_MOD, coincide. Both outputs (that is, Up and Down) then remain high. This is equal to the zero error mode. The phase-frequency detector input frequency range operates at 12 MHz.

9.3.10.6 Transmitter Circuitry

The transmitter consists of ROM tables, two Digital to Analog (DA) converters, two low-pass filters, IQ mixers, and a power amplifier (PA).

The ROM tables generate a digital IQ signal based on the transmit data. The output of the ROM tables is inserted into IQ-DA converters and filtered through two low-pass filters. The two signal components are mixed up to 2.5 GHz by the TX mixers and added together before being inserted into the transmit PA.

9.3.10.6.1 IQ-DA Converters and TX Mixers

The ROM output signals drive an I- and a Q-DA converter. Two Butterworth low-pass filters filter the DA output signals. The 6-MHz clock for the DA converters and the logic circuitry around the ROM tables are derived from the autotuner.

The TX mixers mix the balanced I- and Q-signals up to 2.4-2.5 GHz. The output signals of the I- and Q-mixers are summed.

9.3.10.7 Crystal Requirements

The LMX9830 contains a crystal driver circuit. This circuit operates with an external crystal and capacitors to form an oscillator. shows the recommended crystal circuit. Table 13 specifies system clock requirements.

The RF local oscillator and internal digital clocks for the LMX9830 is derived from the reference clock at the CLK+ input. This reference may either come from an external clock or a dedicated crystal oscillator. The crystal oscillator connections require an Xtal and two grounded capacitors.

It is also important to consider board and design dependant capacitance in tuning crystal circuit. Equations that follow allow a close approximation of crystal tuning capacitance required, but actual values on board will vary with capacitive properties of the board. As a result, some fine tuning of crystal circuit that must be done that cannot be calculated; tuning must be done by testing different values of load capacitance.

Copyright © 2008–2015, Texas Instruments Incorporated

Many different crystals can be used with the LMX9830. Key requirements from *Bluetooth* specification is + 20 ppm. Additionally, ESR (Equivalent Series Resistance) must be carefully considered. LMX9830 can support maximum of 230 Ω ESR, but it is recommended to stay <100 Ω ESR for best performance over voltage and temperature. Reference Figure 17 for ESR as part of crystal circuit for more information.

9.3.10.7.1 Crystal

The crystal appears inductive near its resonant frequency. It forms a resonant circuit with its load capacitors. The resonant frequency may be trimmed with the crystal load capacitance.

1. Load Capacitance: For resonance at the correct frequency, the crystal should be loaded with its specified load capacitance, which is the value of capacitance used in conjunction with the crystal unit. Load capacitance is a parameter specified by the crystal, typically expressed in pF. The crystal circuit shown in Figure 13 is composed of:
   - C1 (motional capacitance)
   - R1 (motional resistance)
   - L1 (motional inductance)
   - C0 (static or shunt capacitance)

   The LMX9830 provides some of the load with internal capacitors Cint. The remainder must come from the external capacitors and tuning capacitors labeled Ct1 and Ct2 as shown in Figure 12. Ct1 and Ct2 should have the same the value for best noise performance. The LMX9830 has an additional internal capacitance CTUNE of 2.6 pF. Crystal load capacitance (C_L) is calculated as the following:

   $$C_L = C_{int} + C_{TUNE} + Ct1//Ct2 \quad (1)$$

   The C_L above does not include the crystal internal self-capacitance C_0 as shown in Figure 13, so the total capacitance is:

   $$C_{total} = C_L + C_0 \quad (2)$$

   Based on crystal spec and equation:

   $$C_L = C_{int} + C_{TUNE} + Ct1//Ct2 \quad (3)$$

   $$C_L = 8\ pF + 2.6\ pF + 6\ pF = 16.6\ pF \quad (4)$$

   16.6 pF is very close to the TEW crystal requirement of 16 pF load capacitance. With the internal shunt capacitance Ctotal:

   $$Ctotal = 16.6\ pF + 5\ pF = 21.6\ pF \quad (5)$$

2. Crystal Pullability: Pullability is another important parameter for a crystal, which is the change in frequency of a crystal with units of ppm/pF, either from the natural resonant frequency to a load resonant frequency, or from one load resonant frequency to another. The frequency can be pulled in a parallel resonant circuit by changing the value of load capacitance. A decrease in load capacitance causes an increase in frequency, and an increase in load capacitance causes a decrease in frequency.
3. Frequency Tuning: Frequency Tuning is achieved by adjusting the crystal load capacitance with external capacitors. It is a *Bluetooth* requirement that the frequency is always within ±20 ppm. Crystal/oscillator must have cumulative accuracy specifications of **±15 ppm** to provide margin for frequency drift with aging and temperature.

   TEW Crystal: The LMX9830 has been tested with the TEW TAS-4025A crystal, reference Table 10 for specification. Because the internal capacitance of the crystal circuit is 8 pF and the load capacitance is 16 pF, 12 pF is a good starting point for both Ct1 and Ct2. The 2480-MHz RF frequency offset is then tested. Figure 14 shows the RF frequency offset test results.

   Figure 14 shows the results are –20 kHz off the center frequency, which is –1 ppm. The pullability of the crystal is 2 ppm/pF, so the load capacitance must be decreased by about 1.0 pF. By changing Ct1 or Ct2 to 10 pF, the total load capacitance is decreased by 1.0 pF. Figure 15 shows the frequency offset test results. The frequency offset is now zero with Ct1 = 10 pF, Ct2 = 10 pF.

   Reference Table 11 for crystal tuning values used on Mesa Development Board with TEW crystal.

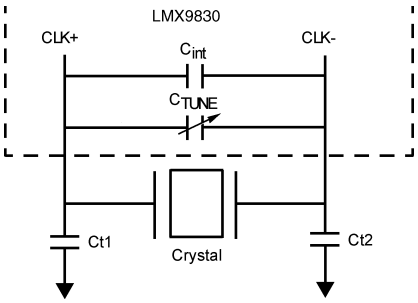

Figure 12. LMX9830 Crystal Recommended Circuit

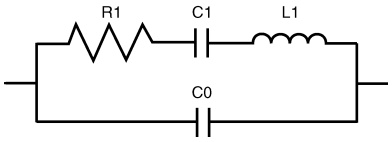

Figure 13. Crystal Equivalent Circuit

Table 10. TEW TAS-4025A

SPECIFICATION	VALUE
Package	4.0 × 2.5 × 0.65 mm - 4 pads
Frequency	13.000 MHz
Mode	Fundamental
Stability	> ±15 ppm @ –40 to +85°C
C_L Load Capacitance	16 pF
ESR	80 Ω max.
C_0 Shunt Capacitance	5 pF
Drive Level	50 ±10 µV
Pullability	2 ppm/pF min
Storage Temperature	–40 to 85°C

Table 11. TEW on LMX9830 DONGLE

REFERENCE	LMX9830
Ct1	12 pF
Ct2	12 pF

Copyright © 2008–2015, Texas Instruments Incorporated

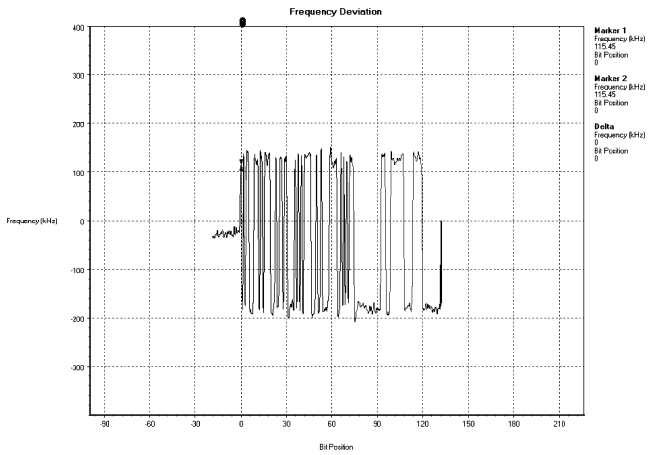

Figure 14. Frequency Offset with 12 pF//12 pF Capacitors

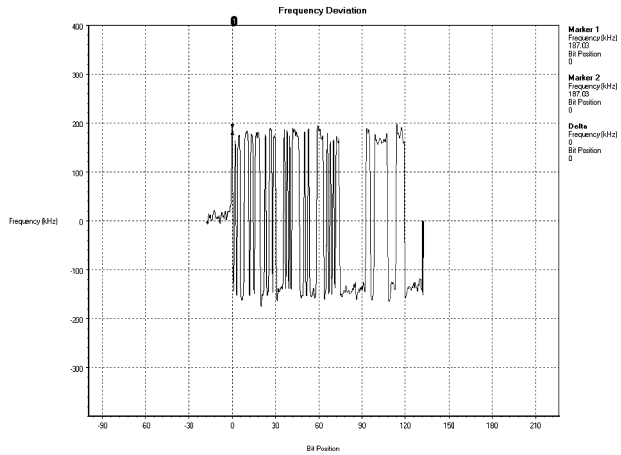

Figure 15. Frequency Offset with 10 pF//10 pF Capacitors

9.3.10.7.2 TCXO (Temperature Compensated Crystal Oscillator)

The LMX9830 also can operate with an external TCXO (Temperature Compensated Crystal Oscillator). The TCXO signal is directly connected to the CLK+.

- Input Impedance: The LMX9830 CLK+ pin has in input impedance of 2 pF capacitance in parallel with >400 kW resistance.

9.3.10.7.3 Optional 32-kHz Oscillator

A second oscillator is provided (see Figure 16) that is tuned to provide optimum performance and low-power consumption while operating with a 32.768-kHz crystal. An external crystal clock network is required between the X2_CKI clock input and the X2_CKO clock output signals. The oscillator is built in a Pierce configuration and uses two external capacitors. Table 12 provides the oscillator's specifications.

In case the 32 kHz is not used, it is recommended to leave X2_CKO open and connect X2_CKI to GND.

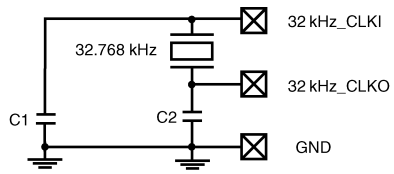

Figure 16. 32.768-kHz Oscillator

Table 12. 32.768-kHz Oscillator Specifications

PARAMETER		TEST CONDITIONS	MIN	TYP	MAX	UNIT
V_{DD}	Supply Voltage		1.62	1.8	1.98	V
I_{DDACT}	Supply Current (Active)			2		µA
f	Nominal Output Frequency			32.768		kHz
V_{PPOSC}	Oscillating Amplitude			1.8		V
	Duty Cycle		40%		60%	—

9.3.10.7.4 ESR (Equivalent Series Resistance)

LMX9830 can operate with a wide range of crystals with different ESR ratings. Reference Table 13 and Figure 17 for more details.

Table 13. System Clock Requirements

PARAMETER	MIN	TYP	MAX	UNIT
External Reference Clock Frequency(1)	10	13	20	MHz
Frequency Tolerance (over full operating temperature and aging)	-20	±15	20	ppm
Crystal Serial Resistance			230	Ω
External Reference Clock Power Swing, pk to pk	100	200	400	mV
Aging			±1	ppm per year

(1) Supported frequencies from external oscillator (in MHz): 10.00, 10.368, 12.00, 12.60, 12.80, 13.00, 13.824, 14.40, 15.36, 16.00, 16.20, 16.80, 19.20, 19.68, 19.80

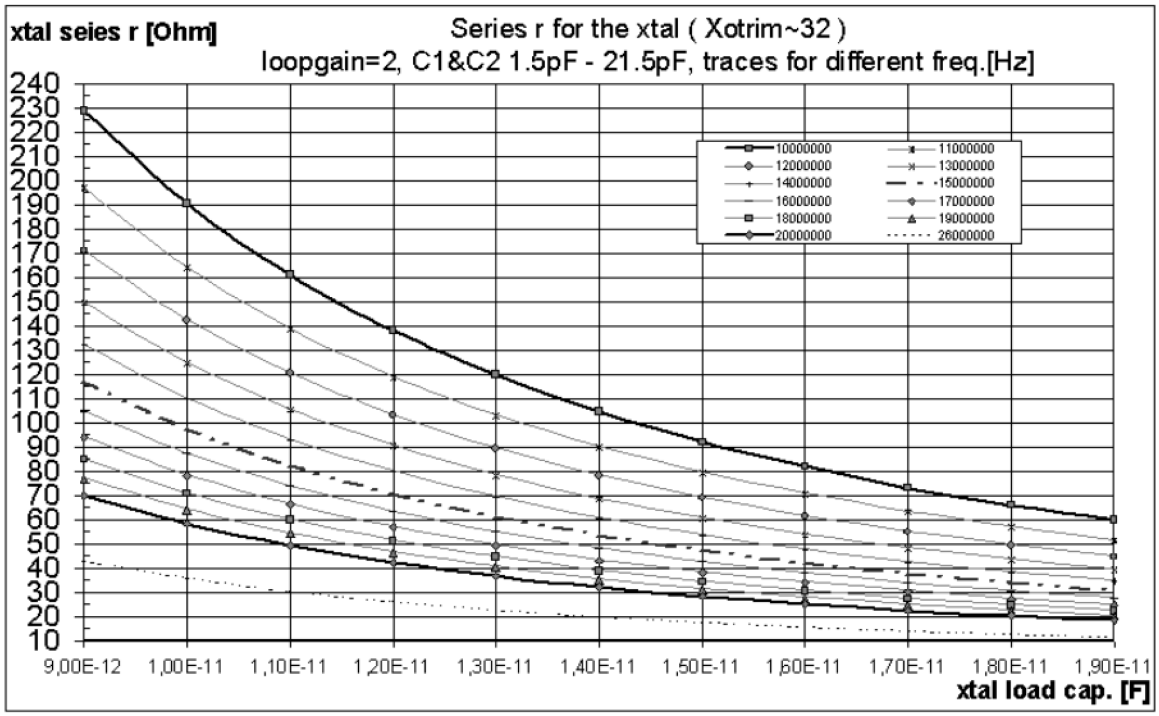

Figure 17. ESR vs Load Capacitance for the Crystal Circuit

9.3.10.7.5 Antenna Matching and Front-End Filtering

Figure 18 shows the recommended component layout to be used between RF output and antenna input. Allows for versatility in the design such that the match to the antenna maybe improved and/or the blocking margin increased by addition of a LC filter. Refer to antenna application note for further details.

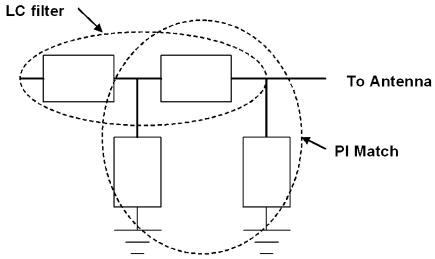

Figure 18. Front End Layout

Copyright © 2008–2015, Texas Instruments Incorporated

9.3.10.7.6 Loop Filter Design

The LMX9830 has an external loop filter which must be designed for best performance by the end customer. This section therefore gives some foresight into its design. Refer also to Loop Filter application note and TI's Webench on-line design tool for more information.

9.3.10.7.6.1 Component Calculations

The following parameters are required for component value calculation of a third order passive loop filter.

Φ	Phase Margin: Phase of the open loop transfer function
F_c	Loop Bandwidth
F_{comp}	Comparison Frequency: Phase detector frequency
KVOC	VCO gain: Sensitivity of the VCO to control volts
KΦ	Charge Pump gain: Magnitude of the alternating current during lock
F_{OUT}	Maximum RF output frequency
T31	Ratio of the poles T3 to T1 in a 3rd order filter
γ	Gamma optimization parameter

The third order loop filter being defined has the following topology. shown in Figure 19.

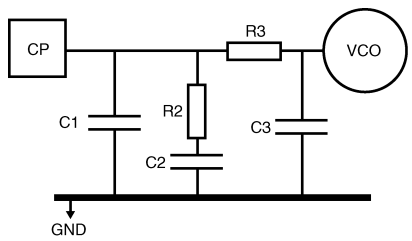

Figure 19. Third Order Loop Filter

$$N = \frac{F_{out}}{F_{comp}} \quad \text{and} \quad \omega_C = 2\pi F_C \tag{6}$$

Calculate the poles and zeros. Use exact method to solve for T1 using numerical methods,

$$\phi = \tan^{-1}\left(\frac{\gamma}{\omega_C \bullet T1 \bullet T1 + T31}\right) - \tan^{-1}(\omega_C \bullet T1) - \tan^{-1}(\omega_C \bullet T1 \bullet T31) \tag{7}$$

$$T3 = T31 \times T1 \qquad T2 = \frac{\gamma}{\omega_C^2 \bullet (T1 + T3)} \tag{8}$$

Calculate the loop filter coefficients,

$$A0 = \frac{K\phi \bullet K_{VCO}}{\omega_C^2 \bullet N} \bullet \sqrt{\frac{1 + \omega_C^2 \bullet T2^2}{(1 + \omega_C^2 \bullet T1^2)(1 + \omega_C^2 \bullet T3^2)}}$$

$$A1 = A0 \bullet (T1 + T3) \qquad A2 = A0 \bullet T1 \bullet T3 \tag{9}$$

Summary:

SYMBOL	DESCRIPTION	UNIT
n	N counter value	None
	Loop Bandwidth	rad/s
T1	Loop filter pole	S
T2	Loop filter zero	S
T3	Loop filter zero	S
A0	Total capacitance	nF
A1	First order loop filter coefficient	nFs
A2	Second order loop filter coefficient	nFs2

Components can then be calculated from loop filter coefficients

$$C1 = \frac{A2}{T2^2} \bullet (1 + \sqrt{1 + \left(\frac{T2 \bullet A0 - T2 \bullet A1}{A2}\right)} \tag{10}$$

$$C3 = \frac{1 \bullet T2^2 \bullet C1^2 + T2 \bullet A1 \bullet C1 - A2 \bullet A0}{T2^2 \bullet C1 - A2} \qquad C2 = A0 - C1 - C3 \tag{11}$$

$$R2 = \frac{T2}{C2} \qquad R3 = \frac{A2}{C1 \bullet C3 \bullet T2} \tag{12}$$

Some typical values for the LMX9830 are:

Table 14. Typical Values

DESCRIPTION	VALUE	UNIT
Comparison Frequency	13	MHz
Phase Margin	48	Pl rad
Loop bandwidth	100	kHz
T3 over T1 ratio	40%	
Gamma	1.0	
VCO gain	120	MHz per V
Charge pump gain	0.6	mA
Fout	2441	MHz

Which give the following component values:

Table 15. Component Values

DESCRIPTION	VALUE	UNIT
C1	0.17	nF
C2	2.38	nF
C3	0.04	nF
R2	1737	Ω
R3	7025	Ω

9.3.10.7.6.2 Phase Noise and Lock-Time Calculations

Phase noise has three sources, the VCO, crystal oscillator and the rest of the PLL consisting of the phase detector, dividers, charge pump and loop filter. Assuming the VCO and crystal are very low noise, it is possible to put down approximate equations that govern the phase noise of the PLL.

Phase noise (in-band) = PN1Hz + 20Log[N] + 10Log[F_{comp}]

where

Copyright © 2008–2015, Texas Instruments Incorporated

- PH1Hz is the PLL normalized noise floor in 1 Hz resolution bandwidth (13)

Further out from the carrier, the phase noise will be affected by the loop filter roll-off and hence its bandwidth.

As a rule-of-thumb;

ΔPhase noise = 40Log[ΔFc]

where

- Fc is the relative change in loop BW expressed as a fraction (14)

For example if the loop bandwidth is reduced from 100 kHz to 50 kHz or by one half, then the change in phase noise will be -12dB. Loop BW in reality should be selected to meet the lower limit of the modulation deviation, this will yield the best possible phase noise.

Even further out from the carrier, the phase noise will be mainly dominated by the VCO noise assuming the crystal is relatively clean.

Lock-time is dependent on three factors, the loop bandwidth, the maximum frequency jump that the PLL must make and the final tolerance to which the frequency must settle. As a rule-of-thumb it is given by:

$$LT = \frac{400}{F_C}(1 - \log_{10}\Delta F) \qquad \text{Where } \Delta F = \frac{\text{Frequency} - \text{tolerance}}{\text{Frequency} - \text{jump}} \tag{15}$$

These equations are approximations of the ones used by Webench to calculate phase noise and lock-time.

9.3.10.7.6.3 Practical Optimization

In an example where frequency drift and drift rate can be improved though loop filter tweaks, consider the results taken below. The drift rate is 26.1 kHz per 50 µs and the maximum drift is 25 kHz for DH1 packets, both of which are exceeding or touching the *Bluetooth* pass limits. These measurements are taken with component values shown in Table 15.

Table 16. Loop Filter Optimization Example – Before Optimization

TRM/CA/09/C (CARRIER DRIFT				
HOPPONG ON- LOW CHANNEL				
	DH1	DH3	DH5	LIMITS
Drift Rate/50 µs	26.1 kHz	N/A	−30.5 kHz	±20 kHz
Max Drift	25 kHz	N/A	36 kHz	DHI: ±25 kHz
Average Drift	−1 kHz	N/A	12 kHz	DH3: ±40 kHz
Packets Tested	10	N/A	10	D5I: ±40 kHz
Packets Failed	2	N/A	10	
Overall Result	Failed	N/A	Failed	

Results in Table 17 were taken on the same board with three loop filter values changed. C2 and R2 have been increased in value and C1 has been reduced. The drift rate has improved by 13 kHz per 50 µs and the maximum drift has improved by 10 kHz.

Table 17. Loop Filter Optimization Example – After Optimization

TRM/CA/09/C (CARRIER DRIFT				
HOPPONG ON- LOW CHANNEL				
	DH1	DH3	DH5	LIMITS
Drift Rate/50 µs	−13.6 kHz	N/A	−15.6 kHz	±20 kHz
Max Drift	15 kHz	N/A	21 kHz	DHI: ±25 kHz
Average Drift	3 kHz	N/A	1 kHz	DH3: ±40 kHz
Packets Tested	10	N/A	10	D5I: ±40 kHz
Packets Failed	0	N/A	0	
Overall Result	Passed	N/A	Passed	

Copyright © 2008–2015, Texas Instruments Incorporated

The effect of changing these three components is to reduce the loop bandwidth which reduces the phase noise. The reduction in this noise level corresponds directly to the reduction of noise in the payload area where drift is measured. This noise reduction comes at the expense of lock-time which can be increased to 120 µs without suffering any ill effects, however if we continue to reduce the loop BW further the lock-time will increase such that the PLL does not have time to lock before data transmission and the drift will again increase. Before the lock-time goes out of spec, the modulation index will start to fall because it is being cut by the reducing loop BW. Therefore, a compromise must be found between lock-time, phase noise and modulation, which yields best performance.

Note: The values shown in the LMX9830 data sheet, are the best case optimized values that have been shown to produce the best overall results and are recommended as a starting point for this design.

Another example of how the loop filter values can affect frequency drift rate, these results below show the DUT with maximum drift on mid and high channels failing. Adjusting the loop bandwidth as shown provides the improvement required to pass qualification.

Table 18. Original Results

HOPPONG ON- LOW CHANNEL				
	DH1	**DH3**	**DH5**	**LIMITS**
Drift Rate/50 µs15.00	15.00 kHz	−28.10 kHz	−19.10 kHz	±20 kHz
Maximum Drift	19 kHz	−37 kHz	−20 kHz	DHI: ±25 kHz
Average Drift	11 kHz	−32 kHz	−10 kHz	DH3: ±40 kHz
Packets Tested	10	10	10	D5I: ±40 kHz
Packets Failed	0	1	0	
Result	Pass	Fail	Pass	
HOPPONG ON- MED CHANNEL				
	DH1	**DH3**	**DH5**	**LIMITS**
Drift Rate/50 µs	15.00 kHz	−28.10 kHz	−19.10 kHz	±20 kHz
Max Drift	19 kHz	−37 kHz	−20kHz	DHI: ±25 kHz
Average Drift	11 kHz	−32 kHz	−10 kHz	DH3: ±40 kHz
Packets Tested	10	10	10	D5I: ±40 kHz
Packets Failed	0	1	0	
Overall Result	Pass	Fail	Pass	
HOPPONG ON- HIGH CHANNEL				
	DH1	**DH3**	**DH5**	**LIMITS**
Drift Rate/50 µs	15.00 kHz	−28.10 kHz	−19.10 kHz	±20 kHz
Max Drift	19 kHz	−37 kHz	−20kHz	DHI: ±25 kHz
Average Drift	11 kHz	−32 kHz	−10 kHz	DH3: ±40 kHz
Packets Tested	10	10	10	D5I: ±40 kHz
Packets Failed	0	1	0	
Overall Result	Pass	Fail	Pass	

Copyright © 2008–2015, Texas Instruments Incorporated

Table 19. New Results

HOPPONG ON- LOW CHANNEL				
	DH1	DH3	DH5	LIMITS
Drift Rate/50 µs	−12.00 kHz	−15.10 kHz	18.8 kHz	±20 kHz
Max Drift	−15 kHz	−35 kHz	−19 kHz	DHI: ±25 kHz
Average Drift	−6 kHz	−25 kHz	−9 kHz	DH3: ±40 kHz
Packets Tested	10	10	10	D5I: ±40 kHz
Packets Failed	0	0	0	
Overall Result	Pass	Pass	Pass	
HOPPONG ON- MED CHANNEL				
	DH1	DH3	DH5	LIMITS
Drift Rate/50 µs	−14.20 kHz	−16.10kHz	17.20 kHz	±20 kHz
Max Drift	−16 kHz	−354 kHz	−22 kHz	DHI: ±25 kHz
Average Drift	−11kHz	−27 kHz	−9 kHz	DH3: ±40 kHz
Packets Tested	10	10	10	D5I: ±40 kHz
Packets Failed	0	0	0	
Overall Result	Pass	Pass	Pass	
HOPPONG ON- HIGH CHANNEL				
	DH1	DH3	DH5	LIMITS
Drift Rate/50 µs	−12.70 kHz	−17.40 kHz	16.50 kHz	±20 kHz
Max Drift	−23 kHz	−29 kHz	−25 kHz	DHI: ±25 kHz
Average Drift	−12 kHz	−25 kHz	−16 kHz	DH3: ±40 kHz
Packets Tested	10	10	10	D5I: ±40 kHz
Packets Failed	0	0	0	
Overall Result	Pass	Pass	Pass	

9.3.10.7.6.4 Component Values for NSC Reference Designs

Table 20 shows a list of components for the loop filter values used on TI's reference design, (Serial Dongle) they have been tweaked and optimized in each case to yield optimum performance for each case. The values differ slightly from one platform to another due to board paracitics caused by layout differences.

Table 20. Components for Loop Filter Values

PLATFORM	C8	C7	C9	R23	R14
LMX9830 Dongle	220 pF	2200 pF	39 pF	3.3 k	10 k

9.3.11 Command Interface

The LMX9830 offers *Bluetooth* functionality in either a self contained slave functionality or over a simple command interface. The interface is listening on the UART interface.

The following sections describe the protocol transported on the UART interface between the LMX9830 and the host in command mode (see Figure 20). In Transparent mode, no data framing is necessary and the device does not listen for commands.

9.3.11.1 Framing

The connection is considered “Error free”. But for packet recognition and synchronization, some framing is used.

All packets sent in both directions are constructed per the model shown in Table 21.

9.3.11.1.1 Start and End Delimiter

The “STX” char is used as start delimiter: STX = 0x02. ETX = 0x03 is used as end delimiter.

9.3.11.1.2 Packet Type ID

This byte identifies the type of packet. See Table 22 for details.

9.3.11.1.3 Opcode

The opcode identifies the command to execute. The opcode values can be found within the “LMX9830 Software User’s Guide” included within the LMX9830 Evaluation Board.

9.3.11.1.4 Data Length

Number of bytes in the Packet Data field. The maximum size is defined with 333 data bytes per packet.

9.3.11.1.5 Checksum:

This is a simple Block Check Character (BCC) checksum of the bytes “Packet type”, “Opcode” and “Data Length”. The BCC checksum is calculated as low byte of the sum of all bytes (, if the sum of all bytes is 0x3724, the checksum is 0x24).

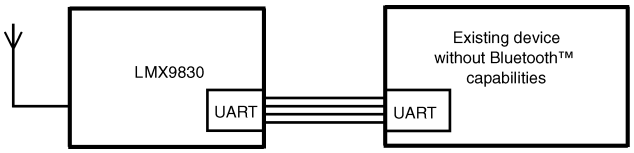

Figure 20. *Bluetooth* Functionality

Table 21. Package Framing

START DELIMITER	PACKET TYPE ID	OPCODE	DATA LENGTH	CHECK SUM	PACKET DATA	END DELIMITER
1 Byte	1 Byte	1 Byte	2 Bytes	1 Byte	<Data Length> Bytes	1 Byte
	- - - - - - - - - - - - - Checksum - - - - - - - - - - - - -					

Table 22. Packet Type Identification

ID	DIRECTION	DESCRIPTION
0x52 'R'	REQUEST (REQ)	A request sent to the *Bluetooth* module. All requests are answered by exactly one confirm.
0x43 'C'	Confirm (CFM)	The *Bluetooth* modules confirm to a request. All requests are answered by exactly one confirm.
0x69 'i'	Indication (IND)	Information sent from the *Bluetooth* module that is not a direct confirm to a request. Indicating status changes, incoming links, or unrequested events.
0x72 'r'	Response (RES)	An optional response to an indication. This is used to respond to some type of indication message.

9.3.11.2 Command Set Overview

The LMX9830 has a well defined command set to:

- Configure the device:
  - Hardware settings
  - Local *Bluetooth* parameters
  - Service database
- Set up and handle links

Table 23 through Table 33 show the actual command set and the events coming back from the device. A full documented description of the commands can be found in the “LMX9830 Software User’s Guide”.

Note: For standard *Bluetooth* operation only commands from Table 23 through Table 25 will be used. Most of the remaining commands are for configuration purposes only.

Copyright © 2008–2015, Texas Instruments Incorporated

Table 23. Device Discovery

COMMAND	EVENT	DESCRIPTION
Inquiry	Inquiry Complete	Search for devices
	Device Found	Lists BDADDR and class of device
Remote Device Name	Remote Device Name Confirm	Get name of remote device

Table 24. SDAP Client Commands

COMMAND	EVENT	DESCRIPTION
SDAP Connect	SDAP Connect Confirm	Create an SDP connection to remote device
SDAP Disconnect	SDAP Disconnect Confirm	Disconnect an active SDAP link
	Connection Lost	Notification for lost SDAP link
SDAP Service Browse	Service Browse Confirm	Get the services of the remote device
SDAP Service Search	SDAP Service Search Confirm	Search a specific service on a remote device
SDAP Attribute Request	SDAP Attribute Request Confirm	Searches for services with specific attributes

Table 25. SPP Link Establishment

COMMAND	EVENT	DESCRIPTION
Establish SPP Link	Establishing SPP Link Confirm	Initiates link establishment to a remote device
	Link Established	Link successfully established
	Incoming Link	A remote device established a link to the local device
Set Link Timeout	Set Link Timeout Confirm	Confirms the Supervision Timeout for the existing Link
Get Link Timeout	Get Link Timeout Confirm	Get the Supervision Timeout for the existing Link
Release SPP Link	Release SPP Link Confirm	Initiate release of SPP link
SPP Send Data	SPP Send Data Confirm	Send data to specific SPP port
	Incoming Data	Incoming data from remote device
Transparent Mode	Transparent Mode Confirm	Switch to Transparent mode on the UART

Table 26. Storing Default Connections

COMMAND	EVENT	DESCRIPTION
Connect Default Connection	Connect Default Connection Confirm	Connects to either one or all stored default connections
Store Default Connection	Store Default Connection Confirm	Store device as default connection
Get list of Default Connections	List of Default Devices	
Delete Default Connections	Delete Default Connections Confirm	

Table 27. *Bluetooth* Low Power Modes

COMMAND	EVENT	DESCRIPTION
Set Default Link Policy	Set Default Link Policy Confirm	Defines the link policy used for any incoming or outgoing link
Get Default Link Policy	Get Default Link Policy Confirm	Returns the stored default link policy
Set Link Policy	Set Link Policy Confirm	Defines the modes allowed for a specific link
Get Link Policy	Get Link Policy Confirm	Returns the actual link policy for the link
Enter Sniff Mode	Enter Sniff Mode Confirm	
Exit Sniff Mode	Exit Sniff Mode Confirm	
Enter Hold Mode	Enter Hold Mode Confirm	
	Power Save Mode Changed	Remote device changed power save mode on the link

Copyright © 2008–2015, Texas Instruments Incorporated

Table 28. Audio Control Commands

COMMAND	EVENT	DESCRIPTION
Establish SCO Link	Establish SCO Link Confirm	Establish SCO Link on existing RFComm Link
	SCO Link Established Indicator	A remote device has established a SCO link to the local device
Release SCO Link	Release SCO Link Confirm	Release SCO Link Audio Control
	SCO Link Released Indicator	SCO Link has been released
Change SCO Packet Type	Change SCO Packet Type Confirm	Changes Packet Type for existing SCO link
	SCO Packet Type changed indicator	SCO Packet Type has been changed
Set Audio Settings	Set Audio Settings Confirm	Set Audio Settings for existing Link
Get Audio Settings	Get Audio Settings Confirm	Get Audio Settings for existing Link
Set Volume	Set Volume Confirm	Configure the volume
Get Volume	Get Volume Confirm	Get current volume setting
Mute	Mute Confirm	Mutes the microphone input

Table 29. Wakeup Functionality

COMMAND	EVENT	DESCRIPTION
Disable Transport Layer	Transport Layer Enabled	Disabling the UART Transport Layer and activates the Hardware Wakeup function

Table 30. SPP Port Configuration and Status

COMMAND	EVENT	DESCRIPTION
Set Port Config	Set Port Config Confirm	Set port setting for the virtual serial port link over the air
Get Port Config	Get Port Config Confirm	Read the actual port settings for a virtual serial port
	Port Config Changed	Notification if port settings were changed from remote device
SPP Get Port Status	SPP Get Port Status Confirm	Returns status of DTR, RTS (for the active RFComm link)
SPP Port Set DTR	SPP Port Set DTR Confirm	Sets the DTR bit on the specified link
SPP Port Set RTS	SPP Port Set RTS Confirm	Sets the RTS bit on the specified link
SPP Port BREAK	SPP Port BREAK	Indicates that the host has detected a break
SPP Port Overrun Error	SPP Port Overrun Error Confirm	Used to indicate that the host has detected an overrun error
SPP Port Parity Error	SPP Port Parity Error Confirm	Host has detected a parity error
SPP Port Framing Error	SPP Port Framing Error Confirm	Host has detected a framing error
	SPP Port Status Changed	Indicates that remote device has changed one of the port status bits

Table 31. Local *Bluetooth* Settings

COMMAND	EVENT	DESCRIPTION
Read Local Name	Read Local Name Confirm	Read actual friendly name of the device
Write Local Name	Write Local Name Confirm	Set the friendly name of the device
Read Local BDADDR	Read Local BDADDR Confirm	
Change Local BDADDR	Change Local BDADDR Confirm	**Note:** The BDADDR must be obtained from the IEEE organization. See http://standarts.ieee.org/regauth/oui/
Store Class of Device	Store Class of Device Confirm	
Set Scan Mode	Set Scan Mode Confirm	Change mode for discoverability and connectability
	Set Scan Mode Indication	Reports end of Automatic limited discoverable mode
Get Fixed Pin	Get Fixed Pin Confirm	Reads current PinCode stored within the device
Set Fixed Pin	Set Fixed Pin Confirm	Set the local PinCode
	PIN request	A PIN code is requested during authentication of an ACL link
Get Security Mode	Get Security Mode Confirm	Get actual Security mode

Copyright © 2008–2015, Texas Instruments Incorporated

Table 31. Local *Bluetooth* Settings (continued)

COMMAND	EVENT	DESCRIPTION
Set Security Mode	Set Security Mode Confirm	Configure Security mode for local device (default 2)
Remove Pairing	Remove Pairing Confirm	Remove pairing with a remote device
List Paired Devices	List of Paired Devices	Get list of paired devices stored in the LMX9830 data memory
Set Default Link Timeout	Set Default Link Timeout Confirm	Store default link supervision timeout
Get Default Link Timeout	Get Default Link Timeout Confirm	Get stored default link supervision timeout
Force Master Role	Force Master Role Confirm	Enables/Disables the request for master role at incoming connections

Table 32. Local Service Database Configuration

COMMAND	EVENT	DESCRIPTION
Store generic SDP Record	Store SDP Record Confirm	Create a new service record within the service database
Enable SDP Record	Enable SDP Record Confirm	Enable or disable SDP records
Delete All SDP Records	Delete All SDP Records Confirm	
Ports to Open	Ports to Open Confirmed	Specify the RFComm Ports to open on start-up

Table 33. Local Hardware Commands

COMMAND	EVENT	DESCRIPTION
Get Default Audio Settings	Get Default Audio Settings Confirm	Get stored Default Audio Settings
Set Default Audio Settings	Set Default Audio Settings Confirm	Configure Default Settings for Audio Codec and Air Format, stored in NVS
Set Event Filter	Set Event Filter Confirm	Configures the reporting level of the command interface
Get Event Filter	Get Event Filter Confirm	Get the status of the reporting level
Read RSSI	Read RSSI Confirm	Returns an indicator for the incoming signal strength
Change UART Speed	Change UART Speed Confirm	Set specific UART speed; needs proper ISEL pin setting
Change UART Settings	Change UART Settings Confirm	Change configuration for parity and stop bits
Test Mode	Test Mode Confirm	Enable *Bluetooth*, EMI test, or local loopback
Restore Factory Settings	Restore Factory Settings Confirm	
Reset	Dongle Ready	Soft reset
Firmware Upgrade		Stops the *Bluetooth* firmware and executes the In-system-programming code
Set Clock Frequency	Set Clock Frequency Confirm	Write Clock Frequency setting in the NVS
Get Clock Frequency	Get Clock Frequency Confirm	Read Clock Frequency setting from the NVS
Set PCM Slave Configuration	Set PCM Slave Configuration Confirm	Write the PCM Slave Configuration in the NVS
Write ROM Patch	Write ROM Patch Confirm	Store ROM Patch in the SimplyBlue module
Read Memory	Read Memory Confirm	Read from the internal RAM
Write Memory	Write Memory Confirm	Write to the internal RAM
Read NVS	Read NVS Confirm	Read from the NVS (EEPROM)
Write NVS	Write NVS Confirm	Write to the NVS (EEPROM)

Table 34. Initialization Commands

COMMAND	EVENT	DESCRIPTION
Set Clock and Baudrate	Set Clock and Baudrate Confirm	Write Baseband frequency and Baudrate used
Enter *Bluetooth* Mode	Enter *Bluetooth* Mode Confirm	Request SimplyBlue module to enter BT mode
Set Clock and Baudrate	Set Clock and Baudrate Confirm	Write Baseband frequency and Baudrate used

Copyright © 2008–2015, Texas Instruments Incorporated

Table 35. GPIO Control Commands

COMMAND	EVENT	DESCRIPTION
Set GPIO WPU	Set GPIO WPU Confirm	Enable/Disable weak pullup resistor on GPIOs
Get GPIO Input State	Get GPIO Input States Confirm	Read the status of the GPIOs
Set GPIO Direction	Set GPIO Direction Confirm	Set the GPIOs direction (Input, Ouput)
Set GPIO Output High	Set GPIO Output High Confirm	Set GPIOs Output to logical High
Set GPIO Output Low	Set GPIO Output Low Confirm	Set GPIOs Output to logical Low

9.4 Device Functional Modes

9.4.1 Operation Modes

On boot-up, the application configures the module following the parameters in the data area.

9.4.1.1 Automatic Operation

9.4.1.1.1 No Default Connections Stored

In Automatic Operation the module is connectable and discoverable and automatically answers to service requests. The command interpreter listens to commands and links can be set up. The full command list is supported.

If connected by another device, the module sends an event back to the host, where the RFComm port has been connected, and switches to transparent mode.

9.4.1.1.2 Default Connections Stored

If default connections were stored on a previous session, once the LMX9830 is reset, it will attempt to connect each device stored within the data RAM three times. The host will be notified about the success of the link setup via a link status event.

9.4.1.1.3 Nonautomatic Operation

In Nonautomatic Operation, the LMX9830 does not check the default connections section within the Data RAM. If connected by another device, it will NOT switch to transparent mode and continue to interpret data sent on the UART.

9.4.1.1.4 Transparent Mode

The LMX9830 supports transparent data communication from the UART interface to a *Bluetooth* link.

If activated, the module does not interpret the commands on the UART which normally are used to configure and control the module. The packages don't need to be formatted as described in Table 21. Instead all data are directly passed through the firmware to the active *Bluetooth* link and the remote device.

Transparent mode can only be supported on a point-to-point connection. To leave Transparent mode, the host must send a UART_BREAK signal to the module.

9.4.1.1.5 Force Master Mode

In Force Master mode tries to act like an Accesspoint for multiple connections. For this it will only accept the link if a Master/slave role switch is accepted by the connecting device. After successful link establishment the LMX9830 will be Master and available for additional incoming links. On the first incoming link the LMX9830 will switch to transparent depending on the setting for automatic or command mode. Additional links will only be possible if the device is not in transparent mode.

9.4.2 Default Connections

The LMX9830 supports the storage of up to 3 devices within its NVS. Those connections can either be connected after reset or on demand using a specific command.

Copyright © 2008–2015, Texas Instruments Incorporated

Device Functional Modes (continued)

9.4.3 Event Filter

The LMX9830 uses events or indicators to notify the host about successful commands or changes at the *Bluetooth* interface. Depending on the application the LMX9830 can be configured. The following levels are defined:

- No Events:
  - The LMX9830 is not reporting any events. Optimized for passive cable replacement solutions.
- Standard LMX9830 events:
  - Only necessary events will be reported
- All events:
  - Additional to the standard all changes at the physical layer will be reported.

9.4.4 Default Link Policy

Each *Bluetooth* Link can be configured to support M/S role switch, Hold Mode, Sniff Mode and Park Mode. The default link policy defines the standard setting for incoming and outgoing connections.

9.4.5 Audio Support

The LMX9830 offers commands to establish and release synchronous connections (SCO) to support Headset or Handsfree applications. The firmware supports one active link with all available package types (HV1, HV2, HV3), routing the audio data between the *Bluetooth* link and the advanced audio interface. In order to provide the analog data interface, an external audio codec is required. The LMX9830 includes a list of codecs which can be used.

Table 36. Operation Parameters Stored in LMX9830

PARAMETER	DEFAULT VALUE	DESCRIPTION
BDADDR	(To be requested from IEEE)	*Bluetooth* device address
Local Name	Serial port device	Friendly Name
PinCode	0000	*Bluetooth* PinCode
Operation Mode	Automatic ON	Automatic mode ON or OFF
Default Connections	0	Up to seven default devices to connect to
SDP Database	1 SPP entry: Name: COM1 Authentication and encryption enabled	Service discovery database, control for supported profiles
UART Speed	9600	Sets the speed of the physical UART interface to the host
UART Settings	1 Stop bit, parity disabled	Parity and stop bits on the hardware UART interface
Ports to Open	0000 0001	Defines the RFComm ports to open
Link Keys	No link keys	Link keys for paired devices
Security Mode	2	Security mode
Page Scan Mode	Connectable	Connectable/Not connectable for other devices
Inquiry Scan Mode	Discoverable	Discoverable/Not Discoverable/Limited Discoverable for other devices
Default Link Policy	All modes allowed	Configures modes allowed for incoming or outgoing connections (Role switch, Hold mode, Sniff mode...)
Default Link Timeout	20 seconds	The Default Link Timeout configures the timeout, after which the link is assumed lost, if no packages have been received from the remote device.
Event Filter	Standard LMX9830 events reported	Defines the level of reporting on the UART — no events — standard events — standard including ACL link events

Device Functional Modes (continued)

Table 36. Operation Parameters Stored in LMX9830 (continued)

PARAMETER	DEFAULT VALUE	DESCRIPTION
Default Audio Settings	non	Configures the settings for the external codec and the air format. • Codecs: Motorola MC145483 / Winbond W681360 OKI MSM7717 / Winbond W681310 PCM Slave • Airformat: CVSD µ-Law A-Law

9.4.6 Low Power Modes

The LMX9830 supports different Low Power Modes to reduce power in different operating situations. The modular structure of the LMX9830 allows the firmware to power down unused modules.

The Low Power Modes have influence on:

- UART transport layer
  - enabling or disabling the interface
- *Bluetooth* Baseband activity
  - firmware disables LLC and Radio if possible

9.4.7 Power Modes

The following LMX9830 power modes, which depend on the activity level of the UART transport layer and the radio activity are defined:

The radio activity level mainly depends on application requirements and is defined by standard *Bluetooth* operations like inquiry/page scanning or an active link.

A remote device establishing or disconnecting a link may also indirectly change the radio activity level.

The UART transport layer by default is enabled on device power up. In order to disable the transport layer the command “Disable Transport Layer” is used. Thus only the Host side command interface can disable the transport layer. Enabling the transport layer is controlled by the HW Wakeup signalling. This can be done from either the Host or the LMX9830. See also “LMX9830 Software User’s Guide” for detailed information on timing and implementation requirements.

Table 37. Power Mode Activity

POWER MODE	UART ACTIVITY	RADIO ACTIVITY	REFERENCE CLOCK
PM0	OFF	OFF	none
PM1	ON	OFF	Main Clock
PM2	OFF	Scanning	Main Clock / 32.768 kHz
PM3	ON	Scanning	Main Clock
PM4	OFF	SPP Link	Main Clock
PM5	ON	SPP Link	Main Clock

Copyright © 2008–2015, Texas Instruments Incorporated

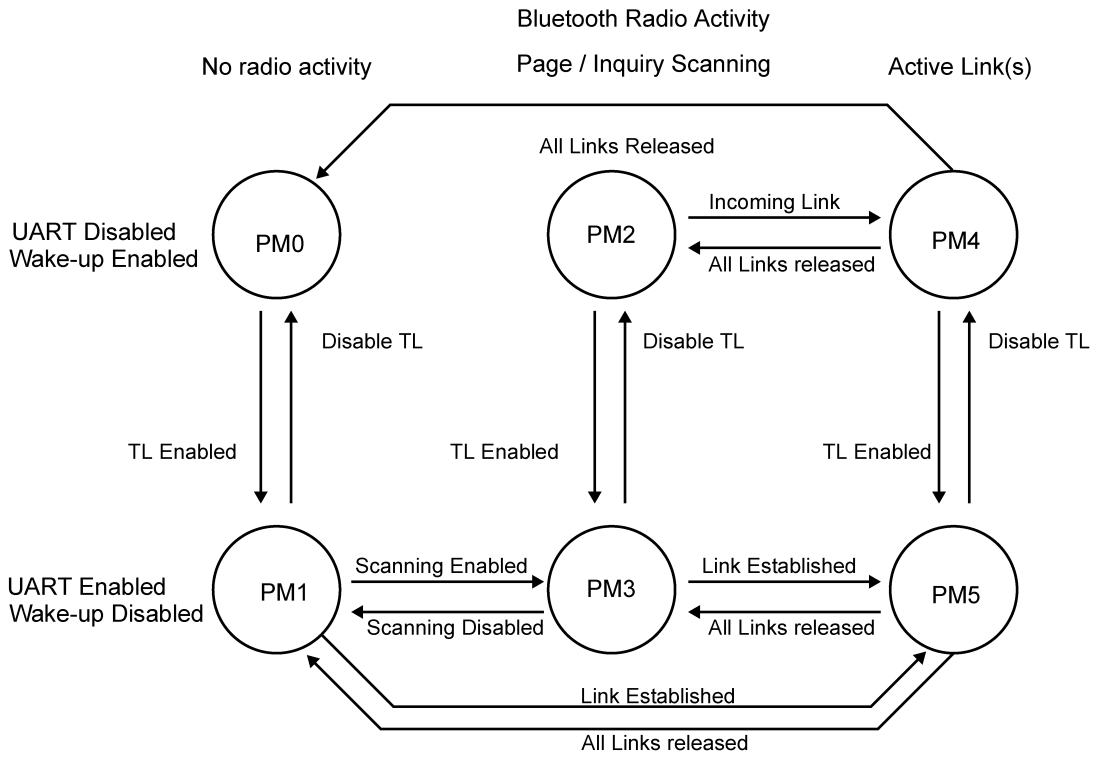

Figure 21. Transition Between Different Hardware Power Modes

9.4.8 Enabling and Disabling UART Transport

9.4.8.1 Hardware Wake-Up Functionality

In certain usage scenarios, the host can switch off the transport layer of the LMX9830 in order to reduce power consumption. Afterwards both devices, host and LMX9830 are able to shut down their UART interfaces.

In order to save system connections the UART interface is reconfigured to hardware wake-up functionality. For a detailed timing and command functionality, also see the *LMX9830 Software User's Guide*.

The interface between host and LMX9830 is defined as described in Figure 22.

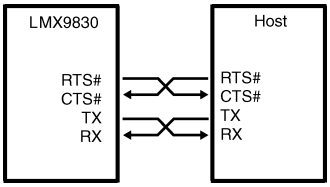

Figure 22. UART NULL Modem Connection

9.4.8.2 Disabling the UART Transport Layer

The Host can disable the UART transport layer by sending the "Disable Transport Layer" Command. The LMX9830 will empty its buffers, send the confirmation event and disable its UART interface. Afterwards the UART interface will be reconfigured to wake up on a falling edge of the CTS pin.

9.4.8.3 LMX9830 Enabling the UART Interface

As the Transport Layer can be disabled in any situation the LMX9830 must first make sure the transport layer is enabled before sending data to the host. Possible scenarios can be incoming data or incoming link indicators. If the UART is not enabled the LMX9830 assumes that the Host is sleeping and waking it up by activating RTS. To be able to react on that Wakeup, the host must monitor the CTS pin.

As soon as the host activates its RTS pin, the LMX9830 will first send a confirmation event and then start to transmit the events.

9.4.8.4 Enabling the UART Transport Layer from the Host

If the host must send data or commands to the LMX9830 while the UART Transport Layer is disabled, it must first assume that the LMX9830 is sleeping and wake it up using its RTS signal.

When the LMX9830 detects the Wake-Up signal it activates the UART HW and acknowledges the Wake-Up signal by settings its RTS. Additionally the Wakeup will be confirmed by a confirmation event. When the Host has received this “Transport Layer Enabled” event, the LMX9830 is ready to receive commands.

Copyright © 2008–2015, Texas Instruments Incorporated

10 Application and Implementation

NOTE

Information in the following applications sections is not part of the TI component specification, and TI does not warrant its accuracy or completeness. TI's customers are responsible for determining suitability of components for their purposes. Customers should validate and test their design implementation to confirm system functionality.

10.1 Typical Application

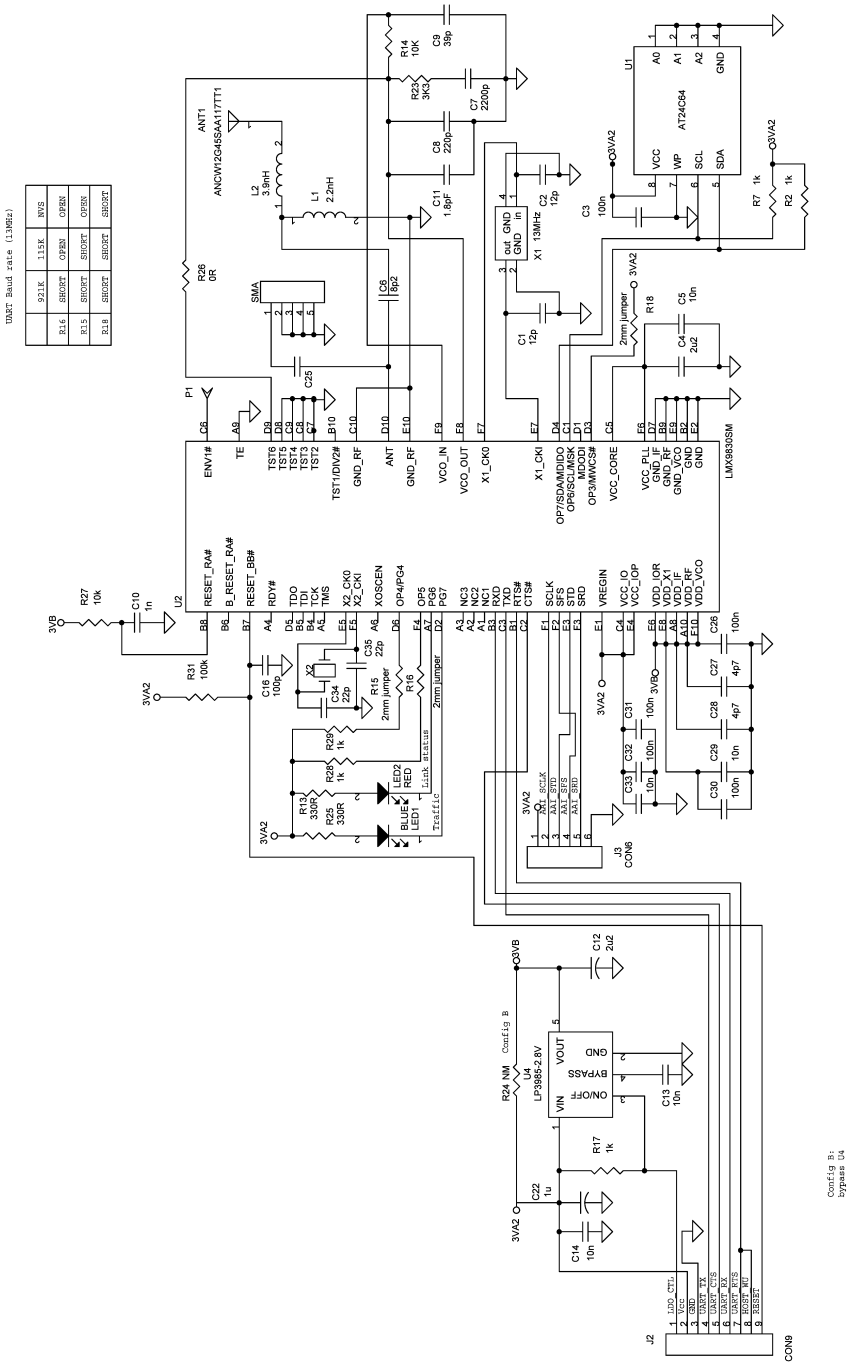

Figure 23. Reference Design

Typical Application (continued)

10.1.1 Design Requirements

10.1.1.1 Evaluation Design

Recommended that a 4-component T-PI pad be used between RF out and antenna input. Allows for versatility in the design such that the match to the antenna maybe improved and/or blocking margin increased by adding a LC filter.

For a schematic including an RS232 communication with the host, see the LMX9830DONGLE designer guide, SNOA518.

10.1.2 Detailed Design Procedure

10.1.2.1 Antenna Matching Network

The antenna matching network may or may not be required, depending upon the impedance of the antenna chosen and the trace impedance on the PCB. A 6.8-pF blocking capacitor is recommended.

NOTE

Additional L network placement is recommended for tuning the trace impedance if needed.

10.1.2.2 Host Interface

To set the logic thresholds of the LMX9830 to match the host system, IOVCC (pin C4) must be connected to the logic power supply of the host system. It is highly recommended that a 10-pF bypass capacitor be placed as close as possible to the IOVCC pad on the LMX9830.

10.1.2.3 Frequency and Baud Rate Selections

OP3, OP4, OP5 can be strapped to the host logic 0 and 1 levels to set the host interface boot-up configuration. Alternatively all OP3, OP4, OP5 can be hardwired over 1-kW pullup/pulldown resistors. See Table 10.

10.1.2.4 Start-Up Sequence Options

OP6, OP7, and Env1 can be left unconnected (both OP6 and OP7 are pulled low and ENV1 is pulled high internally), These can be hardwired over 1-kW pullup/pulldown resistors. See Table 9.

10.1.2.5 Clock Input

The clock source must be placed as close as possible to the LMX9830. The quality of the radio performance is directly related to the quality of the clock source connected to the oscillator port on the LMX9830. Careful attention must be paid to the crystal/oscillator parameters or radio performance could be drastically reduced.

10.1.2.6 Soldering

The LMX9830 bumps are designed to melt as part of the Surface Mount Assembly (SMA) process. In order to ensure reflow of all solder bumps and maximum solder joint reliability while minimizing damage to the package, recommended reflow profiles should be used.

Table 38, Table 39 and Figure 24 provide the soldering details required to properly solder the LMX9830 to standard PCBs. The illustration serves only as a guide and TI's is not liable if a selected profile does not work.

See IPC/JEDEC J-STD-020C, July 2004 for more information.

Copyright © 2008–2015, Texas Instruments Incorporated

Typical Application (continued)

Table 38. Soldering Details

PARAMETER	VALUE
PCB Land Pad Diameter	13 mil
PCB Solder Mask Opening	19 mil
PCB Finish (HASL details)	Defined by customer or manufacturing facility
Stencil Aperture	17 mil
Stencil Thickness	5 mil
Solder Paste Used	Defined by customer or manufacturing facility
Flux Cleaning Process	Defined by customer or manufacturing facility
Reflow Profiles	See Figure 24

Table 39. Classification Reflow Profiles (1) (2)

PROFILE FEATURE	NOPB ASSEMBLY
Average Ramp-Up Rate (TsMAX to Tp)	3°C/second maximum
Preheat: Temperature Min (TsMIN) Temperature Max (TsMAX) Time (tsMIN to tsMAX)	 150°C 200°C 60180 seconds
Time maintained above: Temperature (TL) Time (tL)	 217°C 60150 seconds
Peak/Classification Temperature (Tp)	260 + 0°C
Time within 5°C of actual Peak Temperature (tp)	20 – 40 seconds
Ramp-Down Rate	6°C/second maximum
Time 25 °C to Peak Temperature	8 minutes maximum
Reflow Profiles	See Figure 24

(1) See IPC/JEDEC J-STD-020C, July 2004.
(2) All temperatures refer to the top side of the package, measured on the package body surface.

10.1.3 Application Curves

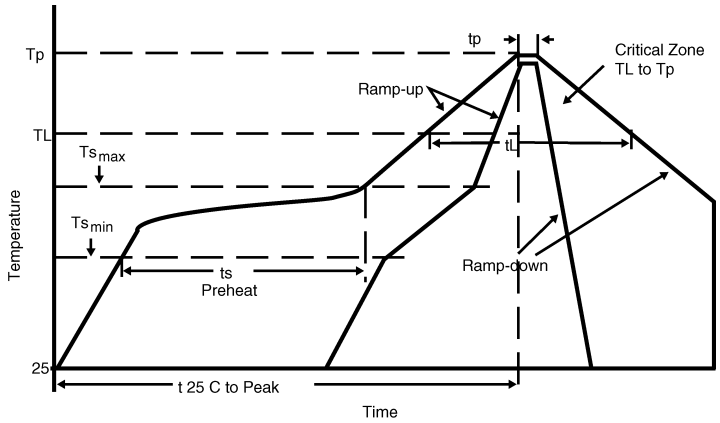

Figure 24. Typical Reflow Profiles

10.2 System Examples

10.2.1 Usage Scenarios

10.2.1.1 Scenario 1: Point-to-Point Connection

LMX9830 acts only as slave, no further configuration is required.

Example: Sensor with LMX9830; hand-held device with standard *Bluetooth* option.

The SPP conformance of the LMX9830 allows any device using the SPP to connect to the LMX9830.

Because of switching to Transparent automatically, the controller has no need for an additional protocol layer; data is sent raw to the other *Bluetooth* device.

On default, a PinCode is requested to block unallowed targeting.

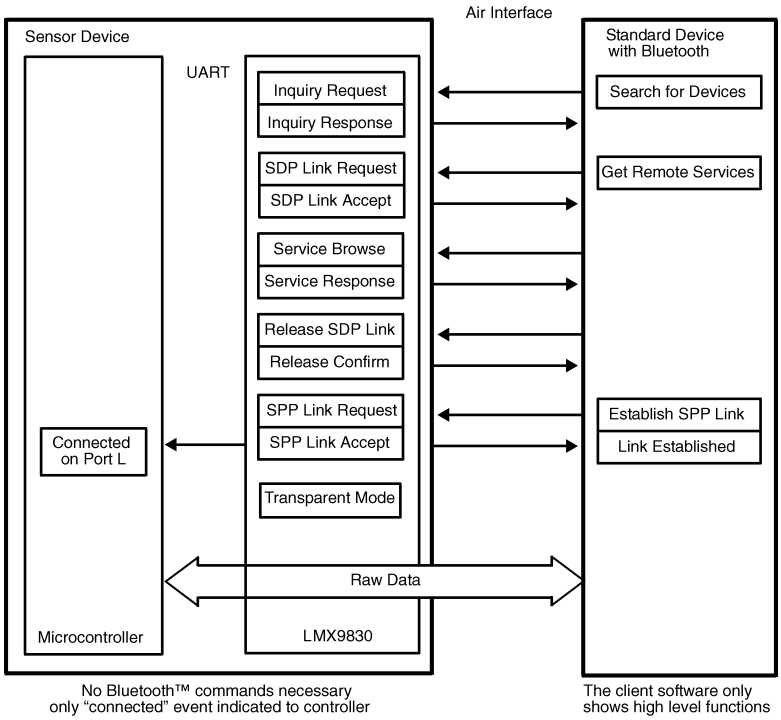

Figure 25. Point-to-Point Connection

10.2.1.2 Scenario 2: Automatic Point-to-Point Connection

LMX9830 at both sides.

Example: Serial Cable Replacement.

Device #1 controls the link setup with a few commands as described.

If step 5 is executed, the stored default device is connected (step 4) after reset (in Automatic mode only) or by sending the command "Connect to Default Device". The command can be sent to the device at any time.

If step 6 is left out, the microcontroller must use the command "Send Data" instead of sending data directly to the module.

Copyright © 2008–2015, Texas Instruments Incorporated

System Examples (continued)

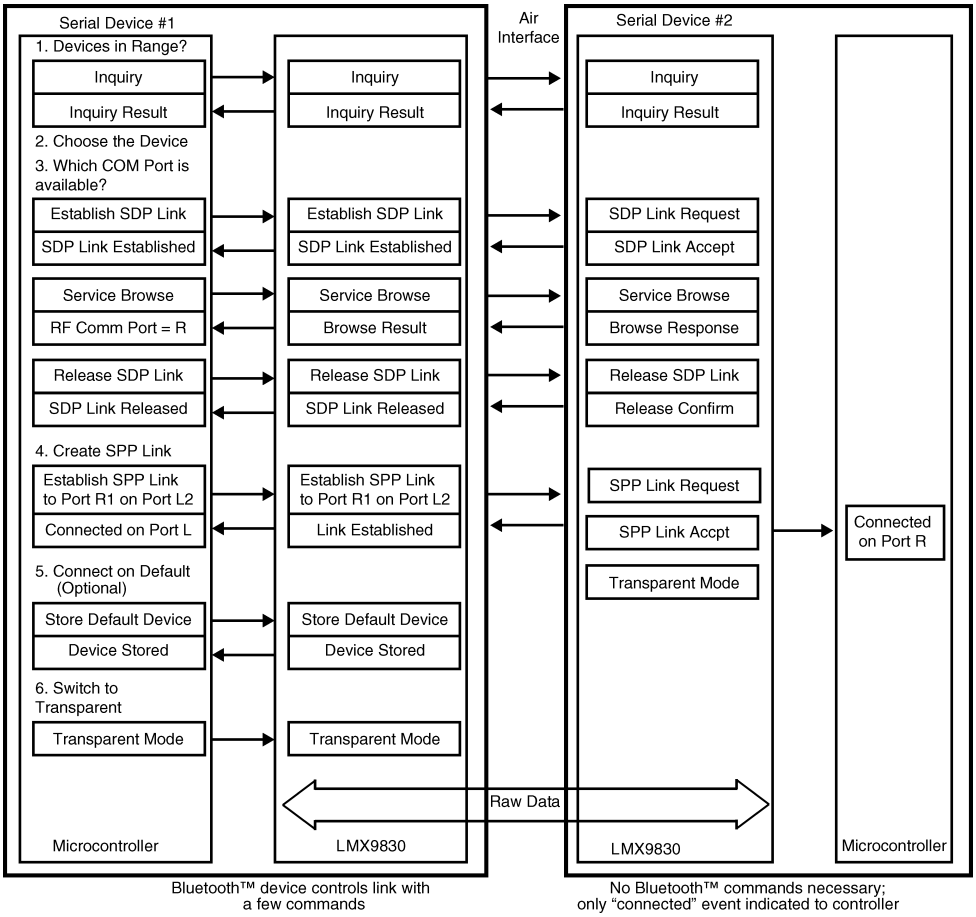

1. Port R indicates the remote RFComm channel to connect to. Usually the result of the SDP request.
2. Port L indicates the Local RFComm channel used for that connection.

Figure 26. Automatic Point-to-Point Connection

10.2.1.3 Scenario 3: Point-to-Multipoint Connection

LMX9830 acts as master for several slaves.

Example: Two sensors with LMX9830; one hand-held device with implemented LMX9830.

Serial Devices #2 and #3 establish the link automatically as soon as they are contacted by another device. No controller interaction is necessary for setting up the *Bluetooth* link. Both switch automatically into Transparent mode. The host sends raw data over the UART.

Serial Device #1 is acting as master for both devices. As the host must decide to or from which device data is coming from, data must be sent using the "Send data command". If the device receives data from the other devices, it is packaged into an event called "Incoming data event". The event includes the device related port number.

If necessary, a link configuration can be stored as default in the master Serial Device #1 to enable the automatic reconnect after reset, power up, or by sending the "connect default connection" command.

System Examples (continued)

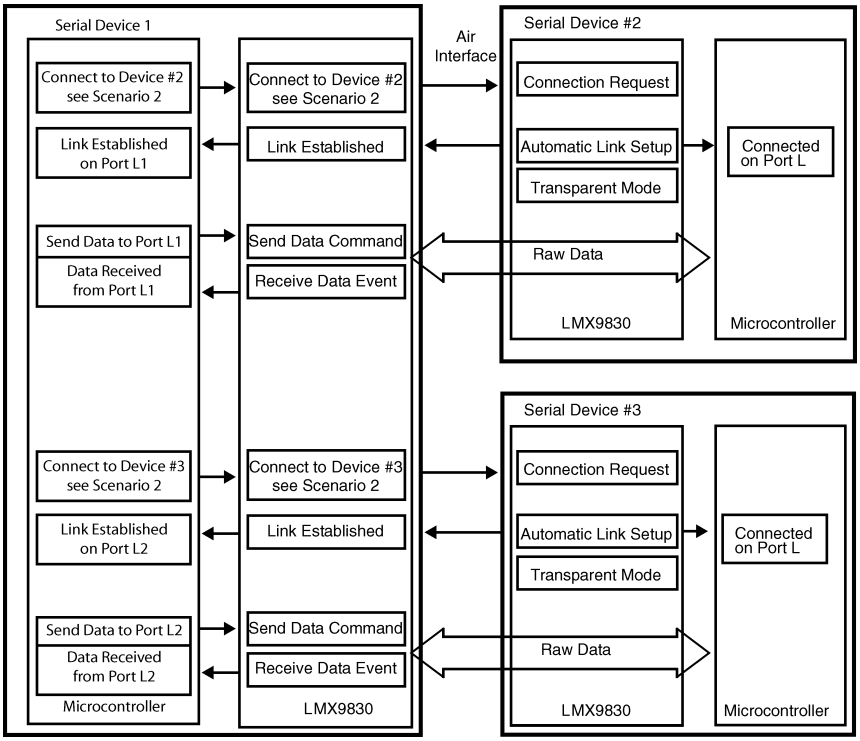

Figure 27. Automatic Point-to-Point Connection

Copyright © 2008–2015, Texas Instruments Incorporated

11 Power Supply Recommendations

11.1 Filtered Power Supply

It is important to provide the LMX9830 with adequate ground planes and a filtered power supply. TI highly recommends placing a 0.1-µF and a 10-pF bypass capacitor as close as possible to V_{CC} (pin E1) on the LMX9830 for 2.5-V and 3.3-V operations.

NOTE

For 1.8-V operations, V_{CC} filtering is not required and V_{CC} should be tied directly to ground.

Figure 28 represents a typical system functional schematic for the LMX9830 in its normal 3.0-V or 3.3-V system interface operation.

Figure 29 represents a typical system functional schematic for the LMX9830 in its 1.8-V system interface operation.

Filtered Power Supply (continued)

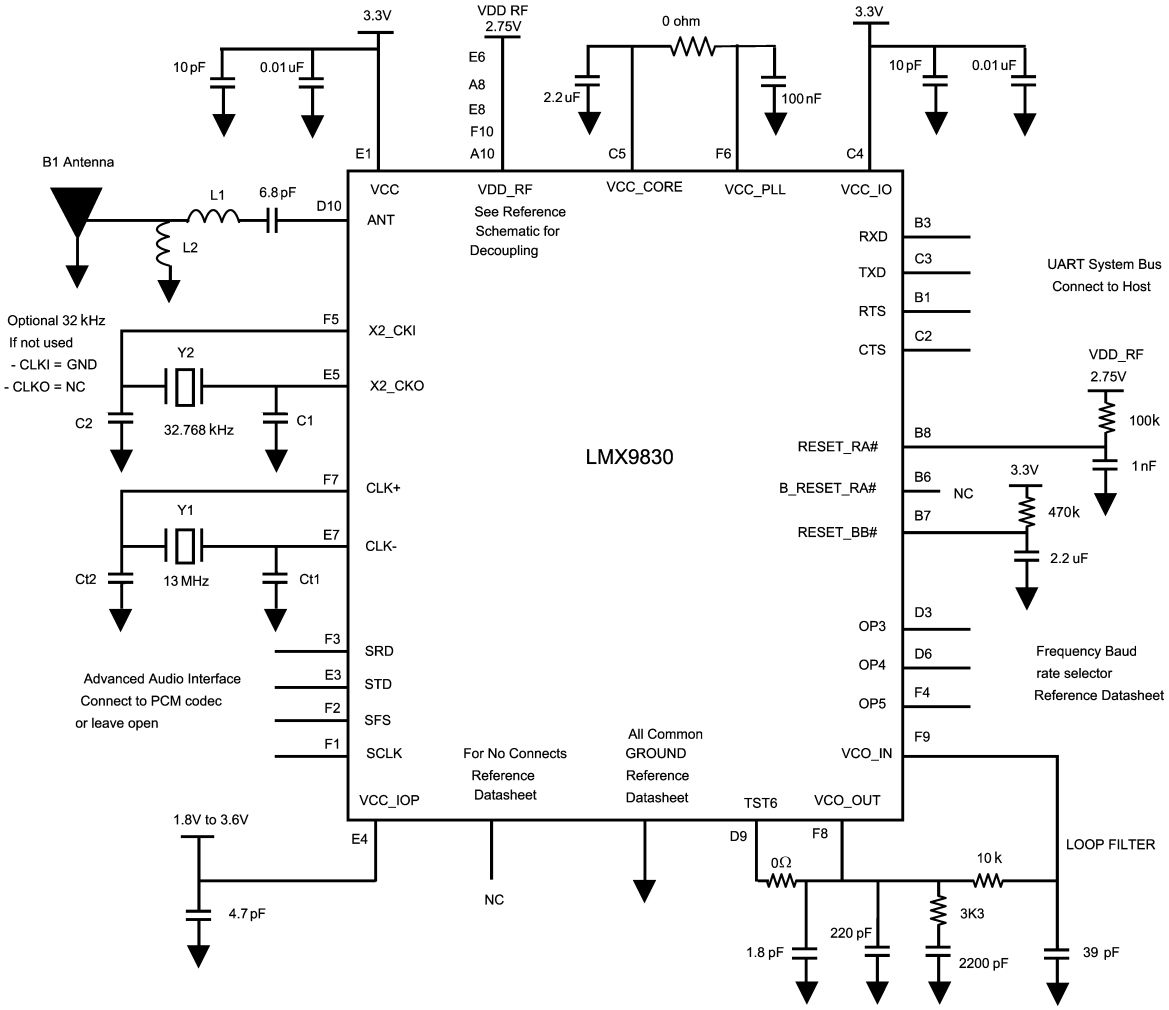

Capacitor values, Ct1 and Ct2 may vary depending on board design crystal manufacturer specification.
Note: (C_L = crystal capacitance load rating) of 12 pF or greater rating is required from the crystal vendor of choice to best match module impedance and give a viable tuning range for the system.
For grounding, one ground plane is used for both RF and Digital Grounding.
For Antenna it is recommend that a 3 component L type pad with series 6.8pF blocker cap be used between RF output and antenna matching L network. This allows for versatility in the design such that the match to the antenna maybe improved and/or the blocking margin increased by use a LC filter.

Figure 28. 2.5-V to 3.3-V Example Functional System Schematic

Copyright © 2008–2015, Texas Instruments Incorporated

Filtered Power Supply (continued)

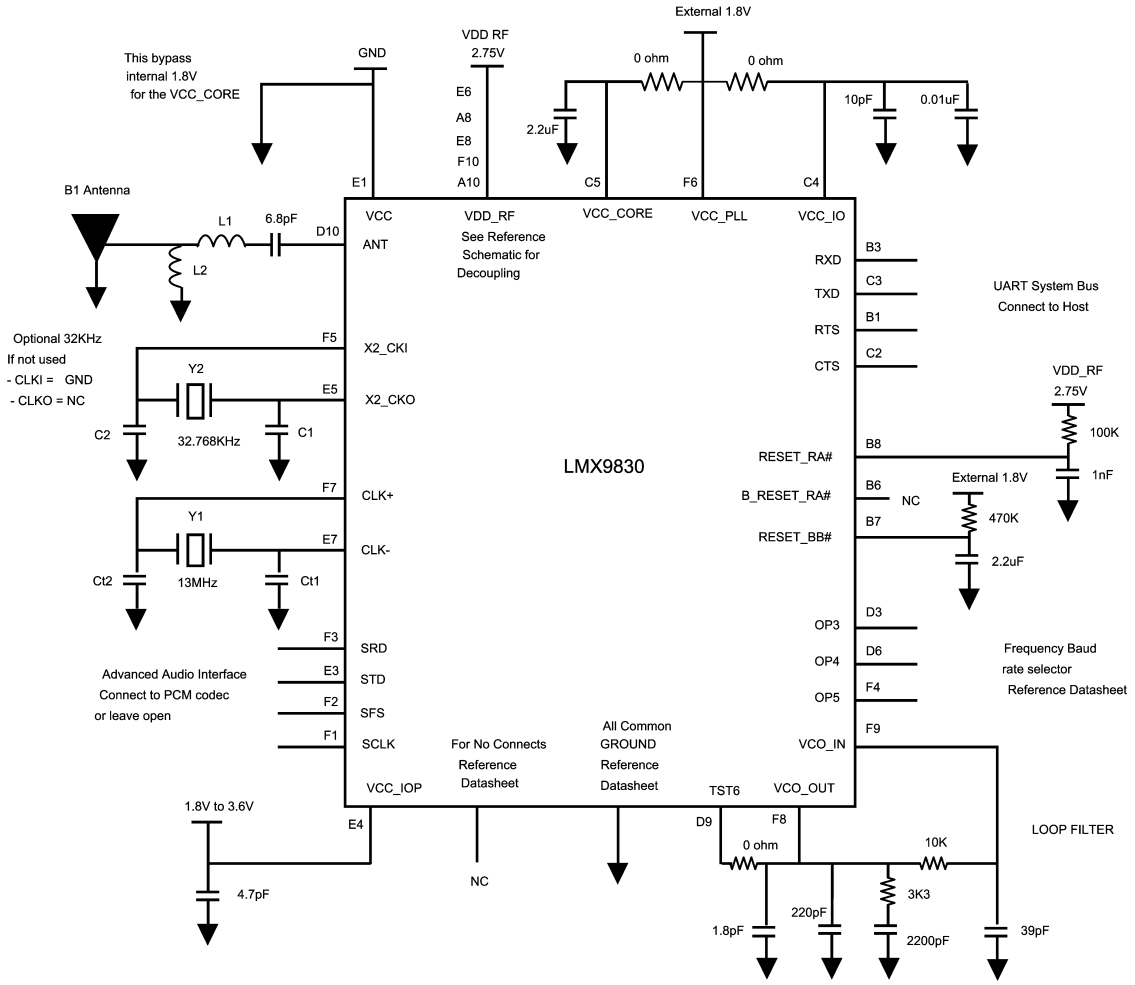

Capacitor values, Ct1 and Ct2 may vary depending on board design crystal manufacturer specification.
Note: (C_L = crystal capacitance load rating) of 12 pF or greater rating is required from the crystal vendor of choice to best match module impedance and give a viable tuning range for the system.
For grounding, one ground plane is used for both RF and Digital Grounding.
For Antenna, TI recommends that a 3-component L type pad with series 6.8-pF blocker cap be used between RF output and antenna matching L network as shown above. This allows for versatility in the design such that the match to the antenna maybe improved and/or the blocking margin increased by use a LC filter.

Figure 29. 1.8-V Example Functional System Schematic

12 Device and Documentation Support

12.1 Device Support

LMX9830 Software User's Guide, SNWC001

LMX9830DONGLE Evaluation Module, http://www.ti.com/tool/lmx9830dongle

12.1.1 Third-Party Products Disclaimer

TI'S PUBLICATION OF INFORMATION REGARDING THIRD-PARTY PRODUCTS OR SERVICES DOES NOT CONSTITUTE AN ENDORSEMENT REGARDING THE SUITABILITY OF SUCH PRODUCTS OR SERVICES OR A WARRANTY, REPRESENTATION OR ENDORSEMENT OF SUCH PRODUCTS OR SERVICES, EITHER ALONE OR IN COMBINATION WITH ANY TI PRODUCT OR SERVICE.

12.2 Documentation Support

12.2.1 Related Documentation

AN-1810 LMX9830 Design Checklist, SNOA518

12.3 Community Resources

The following links connect to TI community resources. Linked contents are provided "AS IS" by the respective contributors. They do not constitute TI specifications and do not necessarily reflect TI's views; see TI's Terms of Use.

TI E2E™ Online Community ***TI's Engineer-to-Engineer (E2E) Community.*** Created to foster collaboration among engineers. At e2e.ti.com, you can ask questions, share knowledge, explore ideas and help solve problems with fellow engineers.

Design Support ***TI's Design Support*** Quickly find helpful E2E forums along with design support tools and contact information for technical support.

12.4 Trademarks

E2E is a trademark of Texas Instruments.
Bluetooth is a registered trademark of Bluetooth SIG, Inc..
All other trademarks are the property of their respective owners.

12.5 Electrostatic Discharge Caution

These devices have limited built-in ESD protection. The leads should be shorted together or the device placed in conductive foam during storage or handling to prevent electrostatic damage to the MOS gates.

12.6 Glossary

SLYZ022 — *TI Glossary*.

This glossary lists and explains terms, acronyms, and definitions.

13 Mechanical, Packaging, and Orderable Information

The following pages include mechanical, packaging, and orderable information. This information is the most current data available for the designated devices. This data is subject to change without notice and revision of this document. For browser-based versions of this data sheet, refer to the left-hand navigation.

Copyright © 2008–2015, Texas Instruments Incorporated

PACKAGING INFORMATION

Orderable Device	Status (1)	Package Type	Package Drawing	Pins	Package Qty	Eco Plan (2)	Lead/Ball Finish (6)	MSL Peak Temp (3)	Op Temp (°C)	Device Marking (4/5)	Samples
LMX9830SM/NOPB	ACTIVE	NFBGA	NZB	60	320	Green (RoHS & no Sb/Br)	SNAGCU	Level-4-260C-72 HR	-40 to 125	9830SM	Samples
LMX9830SMX/NOPB	ACTIVE	NFBGA	NZB	60	2500	Green (RoHS & no Sb/Br)	SNAGCU	Level-4-260C-72 HR	-40 to 125	9830SM	Samples

(1) The marketing status values are defined as follows:
ACTIVE: Product device recommended for new designs.
LIFEBUY: TI has announced that the device will be discontinued, and a lifetime-buy period is in effect.
NRND: Not recommended for new designs. Device is in production to support existing customers, but TI does not recommend using this part in a new design.
PREVIEW: Device has been announced but is not in production. Samples may or may not be available.
OBSOLETE: TI has discontinued the production of the device.

(2) Eco Plan - The planned eco-friendly classification: Pb-Free (RoHS), Pb-Free (RoHS Exempt), or Green (RoHS & no Sb/Br) - please check http://www.ti.com/productcontent for the latest availability information and additional product content details.
TBD: The Pb-Free/Green conversion plan has not been defined.
Pb-Free (RoHS): TI's terms "Lead-Free" or "Pb-Free" mean semiconductor products that are compatible with the current RoHS requirements for all 6 substances, including the requirement that lead not exceed 0.1% by weight in homogeneous materials. Where designed to be soldered at high temperatures, TI Pb-Free products are suitable for use in specified lead-free processes.
Pb-Free (RoHS Exempt): This component has a RoHS exemption for either 1) lead-based flip-chip solder bumps used between the die and package, or 2) lead-based die adhesive used between the die and leadframe. The component is otherwise considered Pb-Free (RoHS compatible) as defined above.
Green (RoHS & no Sb/Br): TI defines "Green" to mean Pb-Free (RoHS compatible), and free of Bromine (Br) and Antimony (Sb) based flame retardants (Br or Sb do not exceed 0.1% by weight in homogeneous material)

(3) MSL, Peak Temp. - The Moisture Sensitivity Level rating according to the JEDEC industry standard classifications, and peak solder temperature.

(4) There may be additional marking, which relates to the logo, the lot trace code information, or the environmental category on the device.

(5) Multiple Device Markings will be inside parentheses. Only one Device Marking contained in parentheses and separated by a "~" will appear on a device. If a line is indented then it is a continuation of the previous line and the two combined represent the entire Device Marking for that device.

(6) Lead/Ball Finish - Orderable Devices may have multiple material finish options. Finish options are separated by a vertical ruled line. Lead/Ball Finish values may wrap to two lines if the finish value exceeds the maximum column width.

Important Information and Disclaimer: The information provided on this page represents TI's knowledge and belief as of the date that it is provided. TI bases its knowledge and belief on information provided by third parties, and makes no representation or warranty as to the accuracy of such information. Efforts are underway to better integrate information from third parties. TI has taken and continues to take reasonable steps to provide representative and accurate information but may not have conducted destructive testing or chemical analysis on incoming materials and chemicals. TI and TI suppliers consider certain information to be proprietary, and thus CAS numbers and other limited information may not be available for release.

In no event shall TI's liability arising out of such information exceed the total purchase price of the TI part(s) at issue in this document sold by TI to Customer on an annual basis.

TAPE AND REEL INFORMATION

REEL DIMENSIONS

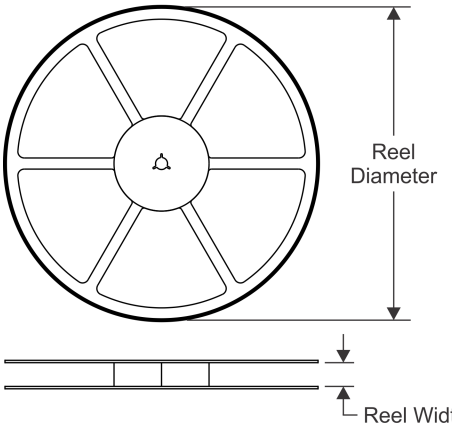

TAPE DIMENSIONS

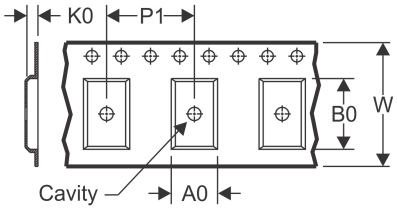

A0	Dimension designed to accommodate the component width
B0	Dimension designed to accommodate the component length
K0	Dimension designed to accommodate the component thickness
W	Overall width of the carrier tape
P1	Pitch between successive cavity centers

QUADRANT ASSIGNMENTS FOR PIN 1 ORIENTATION IN TAPE

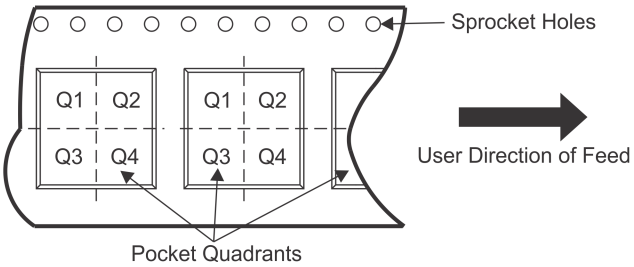

*All dimensions are nominal

Device	Package Type	Package Drawing	Pins	SPQ	Reel Diameter (mm)	Reel Width W1 (mm)	A0 (mm)	B0 (mm)	K0 (mm)	P1 (mm)	W (mm)	Pin1 Quadrant
LMX9830SMX/NOPB	NFBGA	NZB	60	2500	330.0	16.4	6.4	9.4	2.3	8.0	16.0	Q2

TAPE AND REEL BOX DIMENSIONS

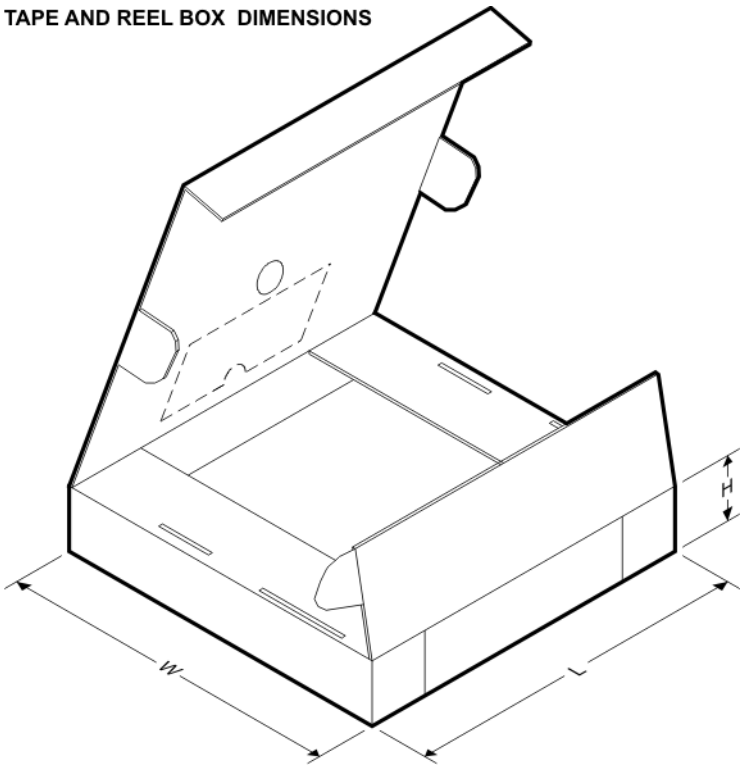

*All dimensions are nominal

Device	Package Type	Package Drawing	Pins	SPQ	Length (mm)	Width (mm)	Height (mm)
LMX9830SMX/NOPB	NFBGA	NZB	60	2500	367.0	367.0	38.0

NZB0060A

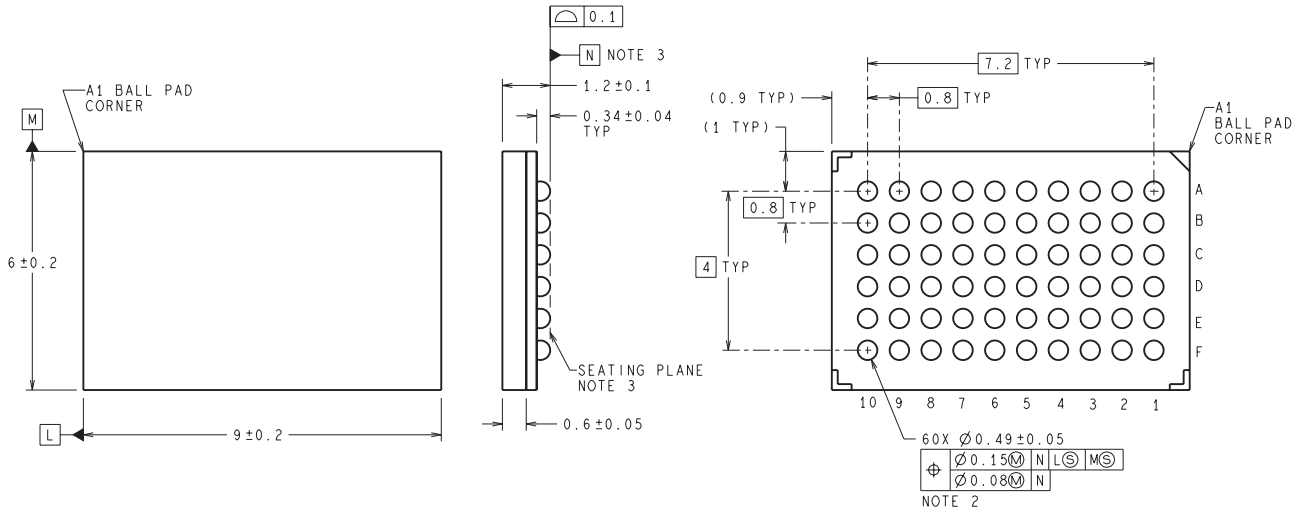

DIMENSIONS ARE IN MILLIMETERS
DIMENSIONS IN ( ) FOR REFERENCE ONLY

SLF60A (Rev A)

IMPORTANT NOTICE

Texas Instruments Incorporated and its subsidiaries (TI) reserve the right to make corrections, enhancements, improvements and other changes to its semiconductor products and services per JESD46, latest issue, and to discontinue any product or service per JESD48, latest issue. Buyers should obtain the latest relevant information before placing orders and should verify that such information is current and complete. All semiconductor products (also referred to herein as “components”) are sold subject to TI’s terms and conditions of sale supplied at the time of order acknowledgment.

TI warrants performance of its components to the specifications applicable at the time of sale, in accordance with the warranty in TI’s terms and conditions of sale of semiconductor products. Testing and other quality control techniques are used to the extent TI deems necessary to support this warranty. Except where mandated by applicable law, testing of all parameters of each component is not necessarily performed.

TI assumes no liability for applications assistance or the design of Buyers’ products. Buyers are responsible for their products and applications using TI components. To minimize the risks associated with Buyers’ products and applications, Buyers should provide adequate design and operating safeguards.

TI does not warrant or represent that any license, either express or implied, is granted under any patent right, copyright, mask work right, or other intellectual property right relating to any combination, machine, or process in which TI components or services are used. Information published by TI regarding third-party products or services does not constitute a license to use such products or services or a warranty or endorsement thereof. Use of such information may require a license from a third party under the patents or other intellectual property of the third party, or a license from TI under the patents or other intellectual property of TI.

Reproduction of significant portions of TI information in TI data books or data sheets is permissible only if reproduction is without alteration and is accompanied by all associated warranties, conditions, limitations, and notices. TI is not responsible or liable for such altered documentation. Information of third parties may be subject to additional restrictions.

Resale of TI components or services with statements different from or beyond the parameters stated by TI for that component or service voids all express and any implied warranties for the associated TI component or service and is an unfair and deceptive business practice. TI is not responsible or liable for any such statements.

Buyer acknowledges and agrees that it is solely responsible for compliance with all legal, regulatory and safety-related requirements concerning its products, and any use of TI components in its applications, notwithstanding any applications-related information or support that may be provided by TI. Buyer represents and agrees that it has all the necessary expertise to create and implement safeguards which anticipate dangerous consequences of failures, monitor failures and their consequences, lessen the likelihood of failures that might cause harm and take appropriate remedial actions. Buyer will fully indemnify TI and its representatives against any damages arising out of the use of any TI components in safety-critical applications.

In some cases, TI components may be promoted specifically to facilitate safety-related applications. With such components, TI’s goal is to help enable customers to design and create their own end-product solutions that meet applicable functional safety standards and requirements. Nonetheless, such components are subject to these terms.

No TI components are authorized for use in FDA Class III (or similar life-critical medical equipment) unless authorized officers of the parties have executed a special agreement specifically governing such use.

Only those TI components which TI has specifically designated as military grade or “enhanced plastic” are designed and intended for use in military/aerospace applications or environments. Buyer acknowledges and agrees that any military or aerospace use of TI components which have ***not*** been so designated is solely at the Buyer's risk, and that Buyer is solely responsible for compliance with all legal and regulatory requirements in connection with such use.

TI has specifically designated certain components as meeting ISO/TS16949 requirements, mainly for automotive use. In any case of use of non-designated products, TI will not be responsible for any failure to meet ISO/TS16949.

Products		**Applications**	
Audio	www.ti.com/audio	Automotive and Transportation	www.ti.com/automotive
Amplifiers	amplifier.ti.com	Communications and Telecom	www.ti.com/communications
Data Converters	dataconverter.ti.com	Computers and Peripherals	www.ti.com/computers
DLP® Products	www.dlp.com	Consumer Electronics	www.ti.com/consumer-apps
DSP	dsp.ti.com	Energy and Lighting	www.ti.com/energy
Clocks and Timers	www.ti.com/clocks	Industrial	www.ti.com/industrial
Interface	interface.ti.com	Medical	www.ti.com/medical
Logic	logic.ti.com	Security	www.ti.com/security
Power Mgmt	power.ti.com	Space, Avionics and Defense	www.ti.com/space-avionics-defense
Microcontrollers	microcontroller.ti.com	Video and Imaging	www.ti.com/video
RFID	www.ti-rfid.com		
OMAP Applications Processors	www.ti.com/omap	**TI E2E Community**	e2e.ti.com
Wireless Connectivity	www.ti.com/wirelessconnectivity		

Mailing Address: Texas Instruments, Post Office Box 655303, Dallas, Texas 75265
Copyright © 2016, Texas Instruments Incorporated