ft2925

2X6W Class-G Stereo Audio Power Amplifier with Automatic Level Control & Battery Tracking AGC

GENERAL DESCRIPTION

The ft2925 is a highly efficient 2X6W Class-G stereo audio power amplifier with automatic level control (ALC) and battery tracking AGC. It integrates dual filterless Class-D audio amplifiers with a multi-level Class-G synchronous boost regulator and operates with a range of supply voltages from 3V to 5.5V. When operating with a 3.6V supply voltage, the ft2925 can deliver an output power of 6W per channel with 10% THD+N, or an ALC output power of 4.5W per channel with 0.3% THD+N, into a pair of 4Ω speakers.

In ft2925, the power supply rails of the audio amplifiers' output stages are internally boosted and regulated by a synchronous PWM switching regulator with two integrated power switches. The boost regulator employs current-mode PWM control with proprietary multi-level Class-G operation to regulate the boosted output voltage dynamically in response to the voltage level of the audio outputs.

The ft2925 features ALC function to constantly monitor and safeguard the audio outputs against the boosted supply voltages, preventing output clipping distortion, excessive power dissipation, and speaker over-load. Once an over-level condition is detected in either channel, the ALC lowers the voltage gain of both audio amplifiers together to limit the peak audio outputs.

In conjunction with ALC, as the battery supply voltage drops below a prescribed value, the battery tracking AGC lowers the voltage gain of both audio amplifiers to limit the peak audio outputs, preventing the collapse of battery voltage.

FEATURES

- Wide range of supply voltages from 3V to 5.5V
- Dual filterless Class-D audio amplifiers integrated with a multi-level Class-G boost regulator
- Automatic level control to eliminate output clipping
- Battery tracking AGC to prevent battery collapse
- Soft drive mode for EMI reduction
- Maximum output power (Non-ALC Mode)
  (VBAT=3.6V, ALC=High, THD+N=10%)
  6.0W/Ch (4Ω Load)
  3.5W/Ch (8Ω Load)
- ALC output power (ALC Mode)
  (VBAT=3.6V, ALC=Low, THD+N=0.3%)
  4.5W/Ch (4Ω Load)
  2.6W/Ch (8Ω Load)
- Wide ALC dynamic range: 12dB
- Maximum voltage gain: 30dB
- High efficiency: 78%
  (VBAT=3.6V, 4Ω Load, Po=2W/Ch, both channels driven)
- Volume fade-in and fade-out
- Under-voltage lockout protection
- Auto-recovering over-current & short-circuit protection
- Thermal over-load protection
- Available in TSSOP-28L package

APPLICATIONS

- Blue Tooth Speakers
- Portable Audio Decks
- Consumer Audio Electronics

APPLICATION CIRCUIT

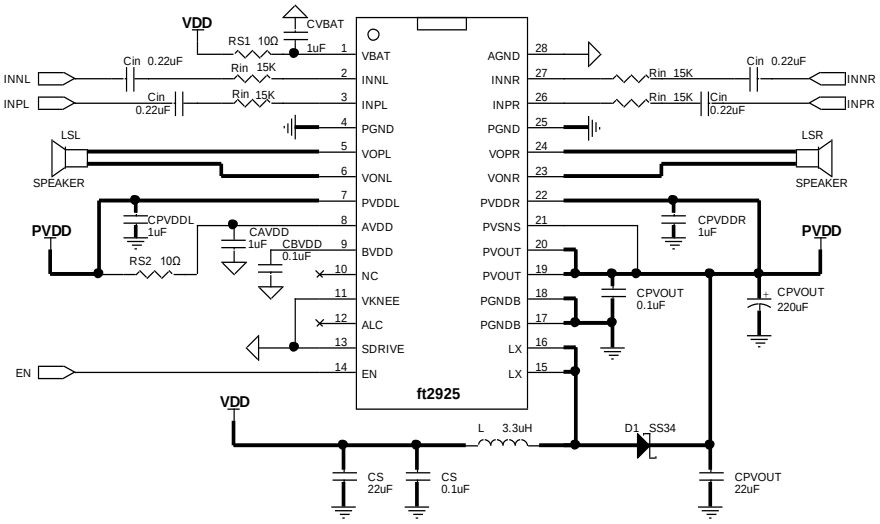

Figure 1: Typical Application Circuit Diagram of ft2925

PIN CONFIGURATION AND DESCRIPTION

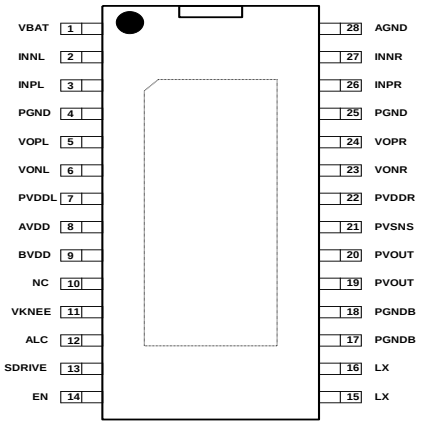

ft2925P (TOP VIEW)

NAME	PIN #	TYPE	DESCRIPTION
VBAT	1	P	Supply input voltage. Connect to a 1µF capacitor for decoupling. It is externally connected to the system supply through a small decoupling resistor of 10Ω.
INNL	2	AI	Left-channel inverting audio input terminal.
INPL	3	AI	Left-channel non-inverting audio input terminal.
PGND	4	G	Power ground for the left-channel audio amplifier's output stage.
VOPL	5	AO	Left-channel non-inverting audio output terminal.
VONL	6	AO	Left-channel inverting audio output terminal.
PVDDL	7	P	Power supply input for the left-channel audio amplifier's output stage. Connect directly to the output capacitor of PVOUT. Also, connect to a 1µF capacitor for decoupling.
AVDD	8	P	Boosted supply input voltage for internal circuitry. Connect it to a 1µF capacitor for decoupling. Also, place a small decoupling resistor of 10Ω between this pin and PVOUT.
BVDD	9	AO	Internally generated voltage reference. Connect to a 0.1µF capacitor for decoupling.
VKNEE	11	DI	**Battery Tracking AGC Control** with an internal 300kΩ pullup resistor to VBAT and an internal 300kΩ pulldown resistor to ground.
ALC	12	DI	**ALC Mode Control** with an internal 300kΩ pullup resistor to VBAT and an internal 300kΩ pulldown resistor to ground.
SDRIVE	13	DI	**Soft Drive Control** with an internal 300kΩ pullup resistor to VBAT and an internal 300kΩ pulldown resistor to ground. When unconnected, the boost regulator is disabled.
EN	14	DI	**Chip Enable** (Active High) with an internal 300kΩ pulldown resistor to ground.
LX	15, 16	AO	Switch node of the boost regulator.
PGNDB	17, 18	G	Power ground for the boost regulator's output stage.
PVOUT	19, 20	P	Boosted voltage output.
PVSNS	21	AI	Boosted voltage sense. Connect directly to the output capacitor of PVOUT.
PVDDR	22	P	Power supply input for the right-channel audio amplifier's output stage. Connect directly to the output capacitor of PVOUT. Also, connect to a 1µF capacitor for decoupling.
VONR	23	AO	Right-channel inverting audio output terminal.
VOPR	24	AO	Right-channel non-inverting audio output terminal.
PGND	25	G	Power ground for the right-channel audio amplifier's output stage.
INPR	26	AI	Right-channel non-inverting audio input terminal.
INNR	27	AI	Right-channel inverting audio input terminal.
AGND	28	G	Analog ground.
NC	10		No internal connection.

ORDERING INFORMATION

PART NUMBER	TEMPERATURE RANGE	PACKAGE
ft2925P	-40°C to +85°C	TSSOP-28L

ABSOLUTE MAXIMUM RATINGS (Note1)

PARAMETER	VALUE
Supply voltage, VBAT	-0.3V to 6V
LX, PVOUT, PVDDL/R, PVSNS, AVDD, VOPL/R, VONL/R	-0.3V to 8V
PGND, PGNDB	-0.3V to 0.3V
All other Pins	-0.3V to VBAT+0.3V
Storage Temperature	-65°C to +150°C
ESD Ratings-Human Body Model (HBM)	4000V
Junction Temperature	150°C
Maximum Soldering Temperature (@10 second duration)	260°C

Note 1: Stresses beyond those listed under absolute maximum ratings may cause permanent damage to the device. These are stress ratings only, and functional operation of the device at any conditions beyond those indicated under recommended operating conditions is not implied. Exposure to absolute-maximum-rated conditions for extended periods may also affect device reliability.

POWER DISSIPATION RATINGS (Note 2, 3)

PACKAGE	$T_A \leq$ +25°C	T_A = +70°C	T_A = +85°C	Θ_{JA}
TSSOP-28L	4.5W	2.8W	2.3W	28°C/W

Note 2: The thermal pad of the package must be directly soldered onto a grounded metal island as a thermal sink on the system board.
Note 3: The power dissipation ratings are for a two-side, two-plane printed circuit board (PCB).

RECOMMENDED OPERATING CONDITIONS

PARAMETER	SYMBOL	CONDITIONS	MIN	TYP	MAX	UNIT
Supply Voltage	V_{DD}		3.0		5.5	V
Minimum Load Impedance	R_L	Across VOPL/R & VONL/R	3.4	4		Ω
Audio Input Resistor	R_{IN}	@ INPL/R, INNL/R	0		56	kΩ
Audio Input Capacitor	C_{IN}	@ INPL/R, INNL/R	0.1	0.22	1.0	µF
Boost Regulator Inductor	L		2.2	3.3	4.7	µH
Boost Regulator Input Capacitor	C_S	Ceramic	10	22		µF
Boost Regulator Output Capacitor	C_{PVOUT}	Ceramic	22	44		µF
		Electrolytic or Tantalum (Note 4)	100	220		µF
BVDD Output Capacitor	C_{BVDD}			0.1		µF
PVDD Decoupling Capacitors	$C_{PVDDL/R}$			1		µF
Operating Junction Temperature	T_J		-40		125	°C
Ambient Temperature	T_A		-40		85	°C
Operating Mode Control	SDRIVE	High η Drive, Boost regulator Enabled	Short to GND			
		Soft Drive, Boost regulator Disabled	Unconnected			
		Soft Drive, Boost regulator Enabled	Short to VBAT			
ALC Mode Control	ALC	ALC-1	Short to GND			
		ALC-2	Unconnected			
		Non-ALC	Short to VBAT			
Battery Tracking AGC Control	VKNEE	Battery Tracking AGC Disabled	Short to GND			
		VKNEE=3.15V	Unconnected			
		VKNEE=3.40V	Short to VBAT			

Note 4: A bulk output capacitor (either electrolytic or tantalum) is typically added to facilitate higher voltage margin for higher audio power at low frequencies. However, be cautious using any bulk output capacitance higher than 220µF as it might adversely slow the boost regulator's response to load transients to some extent affecting audio dynamics when playing music.

IMPORTANT APPLICATION NOTES

1. It is crucial to place the ft2925 in close proximity to the inductor, Schottky diode, and input/output capacitors of the boost regulator on the system board, minimizing parasitic resistances and inductances of high-current traces. Also, these passive components must be placed on the same layer with ft2925 and connected with wide and short metal lines without vias. Failure to do a proper layout on the system board can result in significant degradation of maximum output power, efficiency, THD, and EMI performance. It might even induce excessive ringing at the switch node LX and damage the device permanently.
2. Use wide open areas on the top and bottom layers of the system board as the ground plane (GND) for ft2925. Place lots of solid vias connecting the top and bottom layers of GND. Furthermore, for proper thermal dissipation, reserve wide and uninterrupted GND areas along the thermal flow on the top layer, i.e., no wires cutting through the GND layer and obstructing the thermal flow.
3. The ft2925 is packaged with an exposed thermal pad on the underside of the device. Solder the thermal pad directly onto a large grounded metal island, as a thermal sink, underneath the package for proper thermal dissipation. On the grounded metal island, place several rows of solid, equally-spaced vias connecting to the bottom layer of GND. Failure to do so can severely limit its thermal dissipation capability. It might even cause the device going into over-temperature shutdown occasionally.
4. All the ground pins (AGND, PGND and PGNDB) are directly connected to the ground plane (GND). The power supply inputs (PVDDL/R) for the audio amplifiers' output stages are directly connected to the output capacitors of the boost regulator with wide and short metal traces.
5. As a high-performance Class-G stereo audio amplifier, the ft2925 requires adequate power supply decoupling to ensure its high-efficiency, low distortion, and low EMI. Place each decoupling capacitor as individually close to VBAT, AVDD, BVDD, and PVDDL/R pins as possible.
6. For best noise performance, use differential inputs from the audio sources for ft2925. In single-ended input applications, the unused inputs of ft2925 should be AC-grounded at the audio source.
7. With an on-chip rectification power switch, the ft2925 requires no external Schottky diode for applications where speaker load resistances are 8Ω. However, for applications where speaker load resistances are 4Ω or less, it is required to add an auxiliary Schottky diode across LX and PVOUT pins to improve maximum output power and overall power efficiency. The added Schottky diode must be rated for a current no less than 3A and a reverse breakdown voltage no less than 15V.
8. Additional EMI suppression can be achieved using a ferrite bead filter constructed from a ferrite bead and a capacitor, as shown in Figure 31. Choose a ferrite bead with a rated current no less than 1A for an 8Ω load and 2A for a 4Ω load. Also, place the ferrite beard filter tightly together and individually close to VOPL/R and VONL/R pins respectively.
9. Add a simple RC snubber circuit across two audio outputs (VOPL/R and VONL/R) for each channel, as shown in Figure 32, to prevent the device from accelerated deterioration or abrupt destruction due to excessive inductive flybacks that are induced on fast output switching or by an over-current condition.
10. The operation of the battery tracking AGC can be highly influenced by the electrical characteristics of the battery. Place a small decoupling resistor of 10Ω between the battery supply voltage and the VBAT pin, coupled with a decoupling capacitor of 1μF, mitigating the detrimental effect of high battery current ripples on the detection of battery voltage.
11. Place a small decoupling resistor of 10Ω between AVDD and PVOUT pins, coupled with a decoupling capacitor of 1μF, preventing high frequency transients from interfering with the on-chip linear amplifiers.
12. Use direct low-impedance traces for the audio outputs (VOPL/R and VONL/R) to the output filters and to the speakers.
13. Do not connect any audio outputs (VOPL/R or VONL/R) directly to GND, PVOUT, or PVDDL/R as this might damage the device permanently.
14. Do not alter the logic state of the SDRIVE pin while the device is in operation. To change the operating mode, the device must be first placed in shutdown mode for a minimum of 100 milliseconds.

FUNCTIONAL BLOCK DIAGRAM

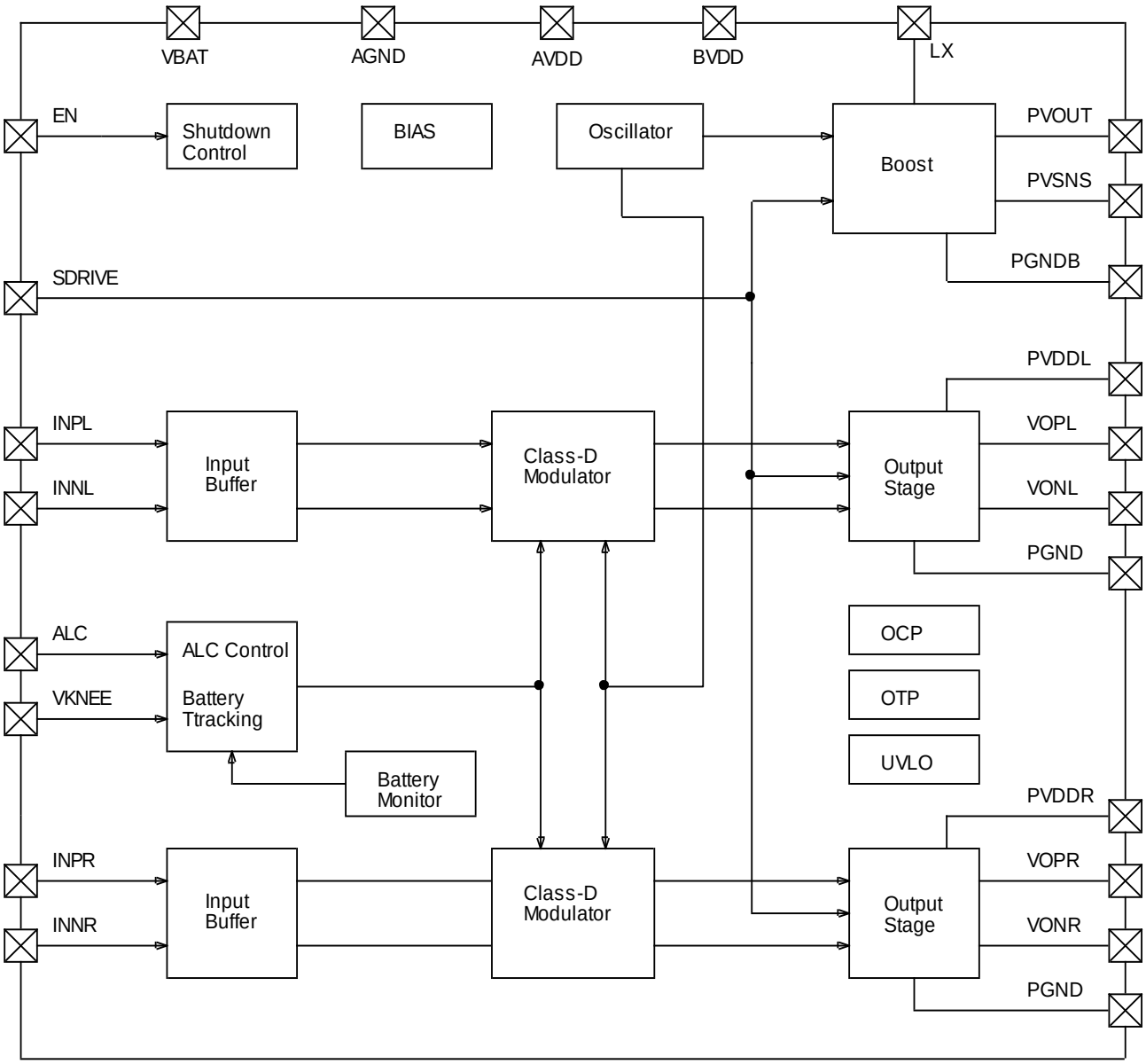

Figure 2: Simplified Functional Block Diagram of ft2925

ELECTRICAL CHARACTERISTICS (Note 5)

VBAT=3.6V, f=1kHz, Load=4Ω+33μH, L=3.3μH, C_{IN}=0.22μF, R_{IN}=15kΩ (Av=25dB), ALC=NC, VKNEE=Low, SDRIVE=Low, C_S=22μF, C_{PVOUT}=22μF//220μF, $C_{PVDDL/R}$=1μF, R_{VBAT}=10Ω, C_{VBAT}=1μF, R_{AVDD}=10Ω, C_{AVDD}=1μF, C_{BVDD}=0.1μF, both channels driven, T_A=25°C, unless otherwise specified.

SYMBOL	PARAMETER	CONDITIONS	MIN	TYP	MAX	UNIT
VBAT	Supply Input Voltage		3.0		5.5	V
V_{UVLOUP}	Power-on Threshold Voltage	VBAT from Low to High		2.2		V
V_{UVLODN}	Power-off Threshold Voltage	VBAT from High to Low		2.0		V
I_{VBAT}	Supply Quiescent Current	Inputs AC-Grounded, No Load	7	10	14	mA
I_{AVDD}	Quiescent Current	V_{IN}=0.25V_{RMS}, No Load		6		mA
I_{SD}	Shutdown Current	EN Low			1	μA
BVDD	Voltage Reference	Inputs AC-Grounded, No Load	3.0	3.2	3.4	V
V_{IH}	Digital High Level Input Voltage	EN	1.2			V
		ALC, SDRIVE, VKNEE	VBAT-0.5		VBAT	V
V_{IL}	Digital Low Level Input Voltage	EN, ALC, SDRIVE, VKNEE			0.4	V
R_{DOWN}	Pulldown Resistor to Ground	EN, ALC, SDRIVE, VKNEE		300		kΩ
R_{UP}	Pullup Resistor to VBAT	ALC, SDRIVE, VKNEE		300		kΩ
T_{OTSD}	Over-Temperature Threshold			160		°C
T_{HYS}	Over-Temperature Hysteresis			20		°C
Class-G Boost Regulator						
PVOUT	Boosted Voltage	No Load	7.0	7.2	7.4	V
		I_{LOAD}=1A		7.0		V
f_{BOOST}	PWM Switching Frequency			800		kHz
Class-D Audio Amplifier with Class-G Boost Regulator (SDRIVE=Low, High Efficiency Drive)						
$P_{O, MAX}$	Maximum Output Power THD+N=10%	R_L=4Ω		6.0		W/Ch
		R_L=8Ω		3.5		W/Ch
	Maximum Output Power THD+N=1%	R_L=4Ω		4.8		W/Ch
		R_L=8Ω		2.8		W/Ch
$P_{O, ALC}$	ALC Output Power	R_L=4Ω, V_{IN}=0.40V_{RMS}		4.5		W/Ch
		R_L=8Ω, V_{IN}=0.40V_{RMS}		2.6		W/Ch
THD+N	Total Harmonic Distortion+Noise (Non-ALC Mode)	R_L=4Ω, Po=2W		0.08		%
		R_L=8Ω, Po=1W		0.08		%
	Total Harmonic Distortion+Noise (ALC Mode)	R_L=4Ω, V_{IN}=0.40V_{RMS}		0.3		%
		R_L=8Ω, V_{IN}=0.40V_{RMS}		0.3		%
A_V	Overall Voltage Gain	R_{IN}=15kΩ		25		dB
R_{IN}	Input Resistance	@ INPL/R, INNL/R		20		kΩ
V_{COMM}	Input Common-Mode Bias	@ INPL/R, INNL/R		1.6		V
R_{OUT-SD}	Output Resistance in Shutdown	@ VOPL/R, VONL/R		3		kΩ
V_{OS}	Output Offset Voltage	Inputs AC-Grounded		±10		mV
V_N	Idle-Channel Noise	Inputs AC-Grounded, A-weighted		170		μV_{RMS}
SNR	Signal-to-Noise Ratio (Non-ALC Mode)	Maximum Output (Vo=4.4V_{RMS}) R_L=4Ω, A-weighted		88		dB
PSRR	Power Supply Rejection Ratio	f=1kHz, Inputs AC-Grounded		70		dB
CMRR	Common Mode Rejection Ratio	f=1kHz, V_{IN}=0.2V_{RMS}		65		dB
X_{TALK}	Crosstalk	R_L=4Ω+33μH, Po=2W		80		dB

ELECTRICAL CHARACTERISTICS (Note 5) (Cont'd)

VBAT=3.6V, f=1kHz, Load=4Ω+33μH, L=3.3μH, C_{IN}=0.22μF, R_{IN}=15kΩ (Av=25dB), ALC=NC, VKNEE=Low, SDRIVE=Low, C_S=22μF, C_{PVOUT}=22μF//220μF, $C_{PVDDL/R}$=1μF, R_{VBAT}=10Ω, C_{VBAT}=1μF, R_{AVDD}=10Ω, C_{AVDD}=1μF, C_{BVDD}=0.1μF, both channels driven, T_A=25°C, unless otherwise specified.

SYMBOL	PARAMETER	CONDITIONS	MIN	TYP	MAX	UNIT
T_{STUP}	Startup Time			80		ms
T_{SD}	Shutdown Mode Settling Time			40		ms
f_{SW}	PWM Output Carrier Frequency			400		kHz
I_{LIMIT}	Over-Current Limit	SDRIVE=Low or High		2.6		A/Ch
		SDRIVE=Unconnected		1.6		A/Ch
Automatic Level Control (ALC)						
A_{MAX}	Maximum ALC Attenuation			12		dB
T_{ATTACK}	ALC Attack Time (V_{IN}=0.24V_{RMS} → 0.75V_{RMS})	ALC-1 Mode (ALC=Low)		6		ms
		ALC-2 Mode (ALC=Unconnected)		48		ms
$T_{RELEASE}$	ALC Release Time (V_{IN}=0.75V_{RMS} → 0.24V_{RMS})	ALC-1 Mode (ALC=Low)		2.0		s
		ALC-2 Mode (ALC=Unconnected)		1.0		s
Volume Fade-In & Fade-Out						
T_{FADEIN}	Fade-In Time			20		ms
$T_{FADEOUT}$	Fade-Out Time			20		ms
Battery Tracking AGC						
V_{KNEE}	Knee Voltage	VKNEE=High		3.40		V
		VKNEE=Unconnected		3.15		V
S_{ATT}	Output Attenuation Slope	@ VOPL/R, VONL/R		4		V/V
Class-D Audio Amplifier with Class-G Boost Regulator (SDRIVE=High, Soft Drive)						
$P_{O, MAX}$	Maximum Output Power THD+N=10%	R_L=4Ω		6.0		W/Ch
		R_L=8Ω		3.5		W/Ch
	Maximum Output Power THD+N=1%	R_L=4Ω		4.8		W/Ch
		R_L=8Ω		2.8		W/Ch
$P_{O, ALC}$	ALC Output Power	R_L=4Ω, V_{IN}=0.40V_{RMS}		4.5		W/Ch
		R_L=8Ω, V_{IN}=0.40V_{RMS}		2.6		W/Ch
THD+N	Total Harmonic Distortion+Noise (Non-ALC Mode)	R_L=4Ω, Po=2W		0.08		%
		R_L=8Ω, Po=1W		0.08		%
	Total Harmonic Distortion+Noise (ALC Mode)	R_L=4Ω, V_{IN}=0.40V_{RMS}		0.3		%
		R_L=8Ω, V_{IN}=0.40V_{RMS}		0.3		%
Class-D Audio Amplifier w/o Class-G Boost Regulator (SDRIVE=Unconnected, Soft Drive)						
$P_{O, MAX}$	Maximum Output Power THD+N=10%	R_L=4Ω		1.5		W/Ch
		R_L=8Ω		0.90		W/Ch
	Maximum Output Power THD+N=1%	R_L=4Ω		1.2		W/Ch
		R_L=8Ω		0.70		W/Ch
$P_{O, ALC}$	ALC Output Power	R_L=4Ω, V_{IN}=0.20V_{RMS}		1.1		W/Ch
		R_L=8Ω, V_{IN}=0.20V_{RMS}		0.65		W/Ch
THD+N	Total Harmonic Distortion+Noise (Non-ALC Mode)	R_L=4Ω, Po=1W		0.08		%
		R_L=8Ω, Po=0.5W		0.08		%
	Total Harmonic Distortion+Noise (ALC Mode)	R_L=4Ω, V_{IN}=0.20V_{RMS}		0.8		%
		R_L=8Ω, V_{IN}=0.20V_{RMS}		0.8		%

TYPICAL PERFORMANCE CHARACTERISTICS (Note 5)

VBAT=3.6V, f=1kHz, Load=4Ω+33μH, L=3.3μH, C_{IN}=0.22μF, R_{IN}=15kΩ (Av=25dB), ALC=NC, VKNEE=Low, SDRIVE=Low, C_S=22μF, C_{PVOUT}=22μF//220μF, $C_{PVDDL/R}$=1μF, R_{VBAT}=10Ω, C_{VBAT}=1μF, R_{AVDD}=10Ω, C_{AVDD}=1μF, C_{BVDD}=0.1μF, both channels driven, T_A=25°C, unless otherwise specified.

List of Typical Performance Characteristics

DESCRIPTION	CONDITIONS	FIGURE #
Output Power vs. Input Voltage	R_L=4Ω+33μH, ALC-1 & ALC-2 & Non-ALC Modes	3
	R_L=8Ω+33μH, ALC-1 & ALC-2 & Non-ALC Modes	4
	R_L=4Ω+33μH, ALC-1 Mode, SDRIVE=High/Unconnected	5
	R_L=8Ω+33μH, ALC-1 Mode, SDRIVE=High/Unconnected	6
Output Power vs. Supply Voltage	V_{IN}=0.40V_{RMS}, R_L=4Ω+33μH, VKNEE=High/Unconnected/Low	7
	V_{IN}=0.40V_{RMS}, R_L=8Ω+33μH, VKNEE=High/Unconnected/Low	8
Overall Efficiency vs. Output Power	R_L=4Ω+33μH, Non-ALC Mode, SDRIVE= Low/High	9
	R_L=8Ω+33μH, Non-ALC Mode, SDRIVE=Low/High	10
THD+N vs. Output Power	R_L=4Ω+33μH, Non-ALC Mode	11
THD+N vs. Input Voltage	R_L=4Ω+33μH, ALC-1 & ALC-2 Modes	12
THD+N vs. Input Frequency	Po=1W/3W, R_L=4Ω+33μH, ALC-1 & ALC-2 Modes	13
Output Power vs. Input Frequency	V_{IN}=0.20V_{RMS}, R_L=4Ω+33μH, Non-ALC Mode, f=20Hz ~ 20kHz	14
PSRR vs. Input Frequency	R_L=4Ω+33μH, Inputs AC-Grounded	15
Quiescent Current vs. Supply Voltage	Input AC-Grounded, R_L=No Load/4Ω+33μH/8Ω+33μH	16
Startup Output Waveforms	V_{IN}=0.1V_{RMS}	17
Shutdown Output Waveforms	V_{IN}=0.1V_{RMS}	18
ALC Release Time	V_{IN}=0.75V_{RMS} → 0.24V_{RMS}, R_L=4Ω+33μH, ALC-1 Mode	19
	V_{IN}=0.75V_{RMS} → 0.24V_{RMS}, R_L=4Ω+33μH, ALC-2 Mode	20
Broadband Output Spectrum	R_L=4Ω+33μH, V_{IN}=0.2V_{RMS}, SDRIVE=Low	21
	R_L=4Ω+33μH, V_{IN}=0.2V_{RMS}, SDRIVE=High	22
	R_L=4Ω+33μH, V_{IN}=0.2V_{RMS}, SDRIVE=Unconnected	23
Mode Transitions of Boost Regulator	R_L=4Ω+33μH, Non-ALC Mode	24

Note 5: All parameters are measured according to the conditions specified in Electrical and Typical Performance Characteristics sections with the following notes, unless otherwise specified:

5.1. The two differential inputs are shorted for common-mode input voltage measurement. All other parameters are taken with input resistors R_{IN}=15Ω and input capacitors C_{IN}=0.22μF, unless otherwise specified.
5.2. The boost regulator's supply decoupling capacitor C_S=22μF is placed close to the inductor.
5.3. The boost regulator's inductor L=3.3μH and Schottky diode are placed tightly together and close to the LX pins.
5.4. The boost regulator's output capacitors C_{PVOUT}=22μF//220μF are placed close to the PVOUT pins.
5.5. The audio amplifiers' supply decoupling capacitors $C_{PVDDL/R}$=1μF are placed individually close to PVDDL/R pins.
5.6. An output inductor of 33μH is placed in series with the load resistor to emulate a speaker load for all AC and dynamic parameters.
5.7. A 33kHz lowpass filter is added even if the analyzer has an internal lowpass filter. An RC lowpass filter (100Ω, 47nF) is used on each output for the data sheet graphs.

TYPICAL PERFORMANCE CHARACTERISTICS (Cont'd)

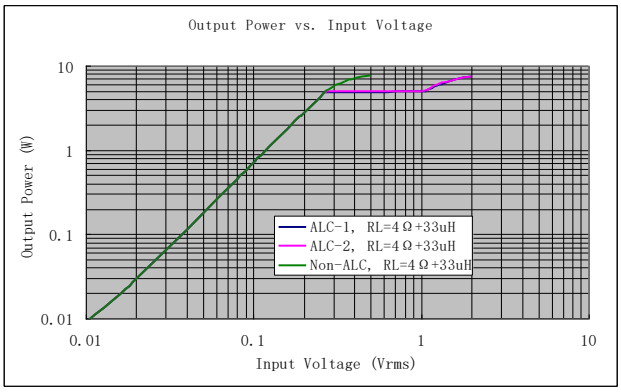

Figure 3: Output Power vs. Input Voltage

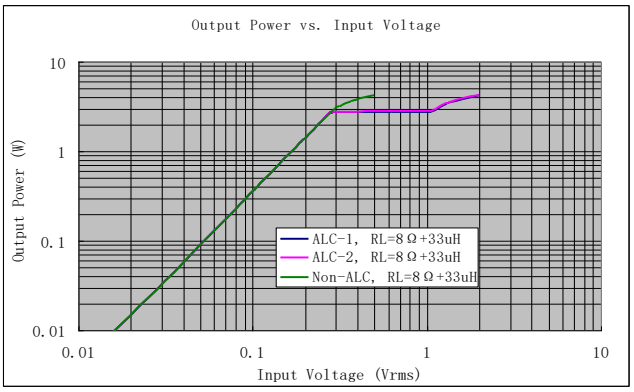

Figure 4: Output Power vs. Input Voltage

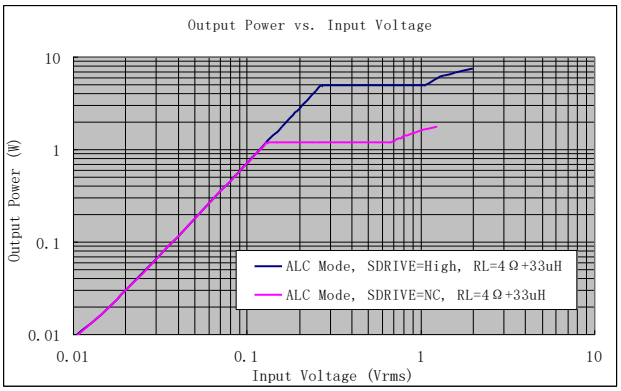

Figure 5: Output Power vs. Input Voltage

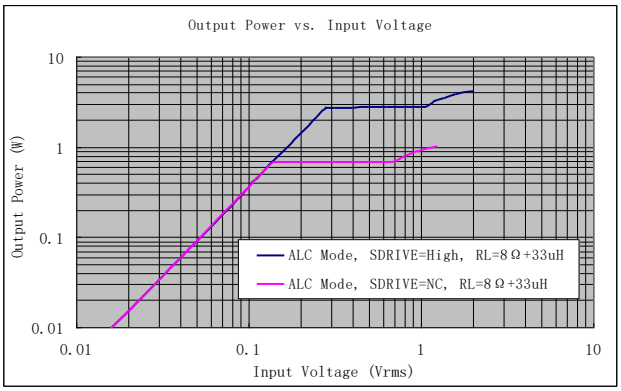

Figure 6: Output Power vs. Input Voltage

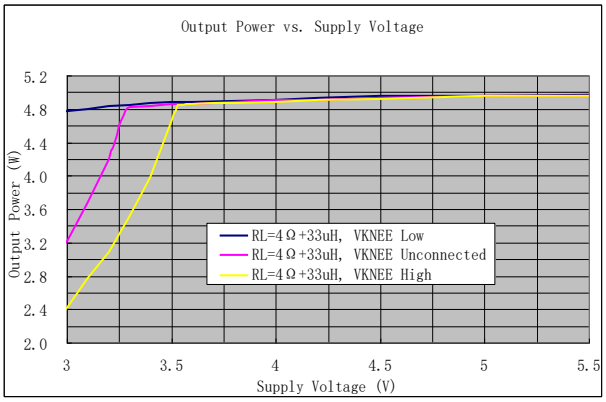

Figure 7: Output Power vs. Supply Voltage

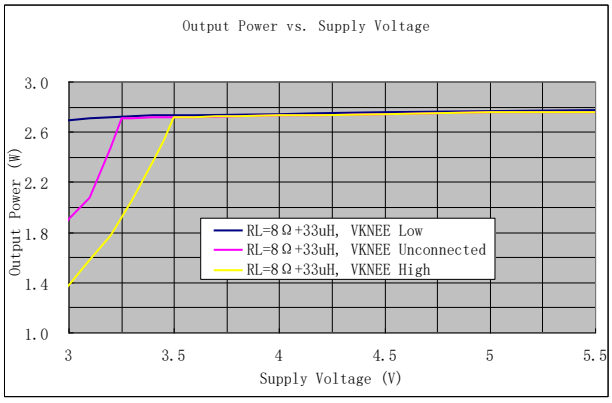

Figure 8: Output Power vs. Supply Voltage

TYPICAL PERFORMANCE CHARACTERISTICS (Cont'd)

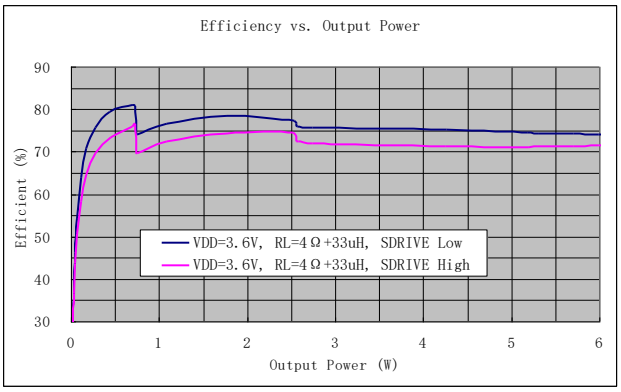

Figure 9: Overall Efficiency vs. Output Power

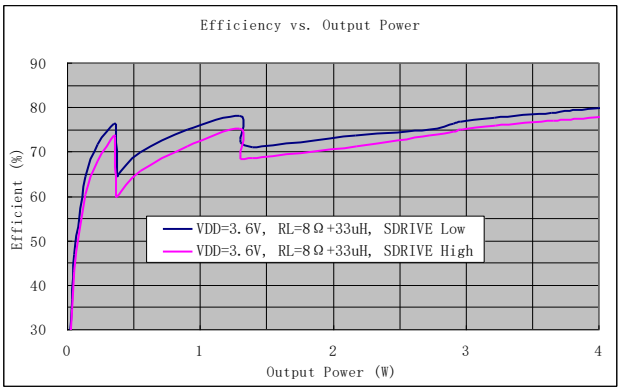

Figure 10: Overall Efficiency vs. Output Power

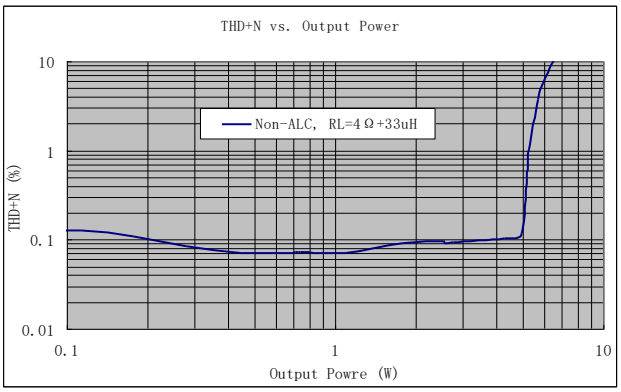

Figure 11: THD+N vs. Output Power

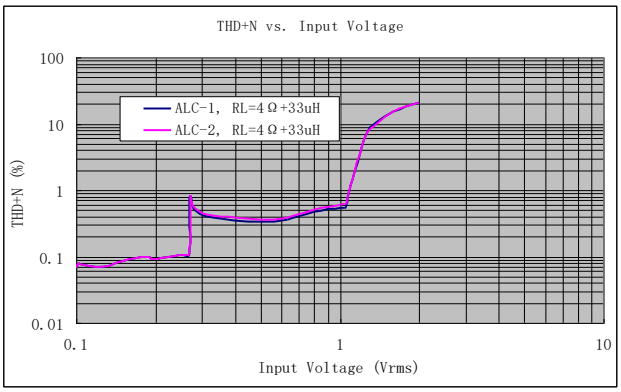

Figure 12: THD+N vs. Input Voltage

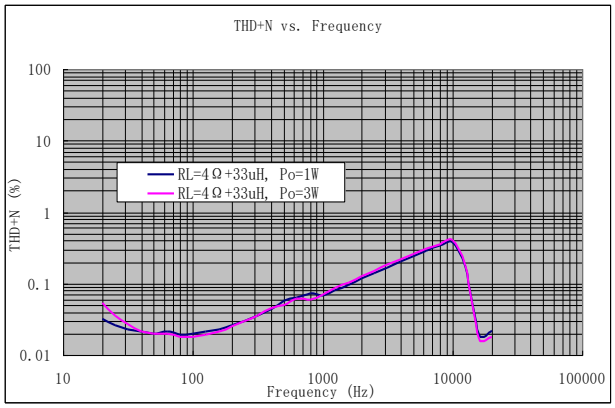

Figure 13: THD+N vs. Input Frequency

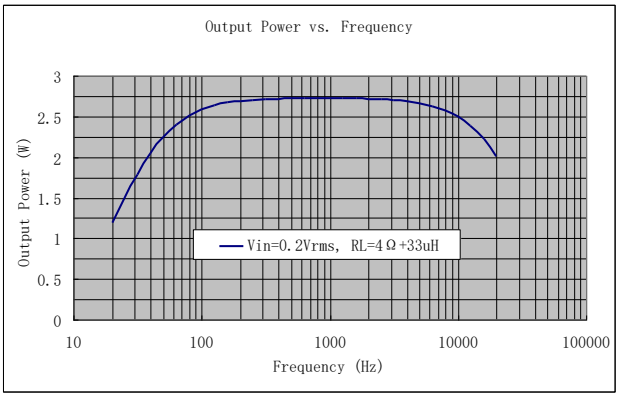

Figure 14: Output Power vs. Input Frequency
(with 33kHz Lowpass Filter)

TYPICAL PERFORMANCE CHARACTERISTICS (Cont'd)

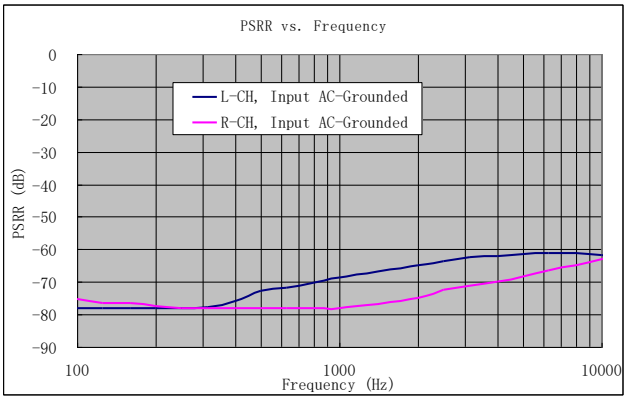

Figure 15: PSRR vs. Input Frequency

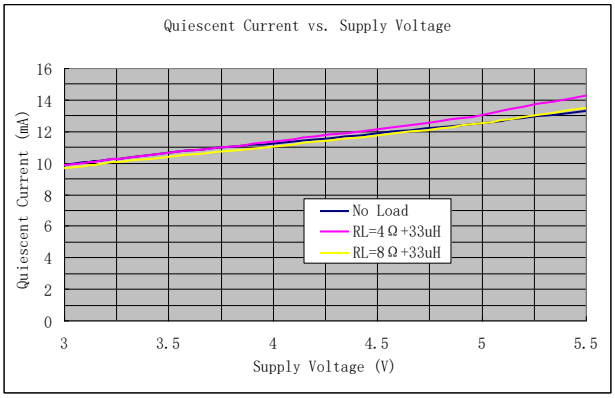

Figure 16: Quiescent Current vs. Supply Voltage

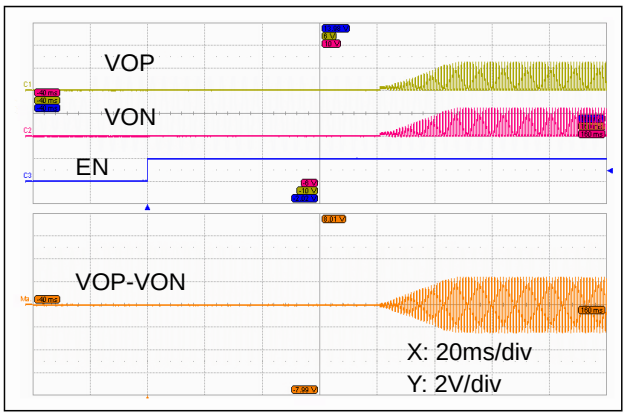

Figure 17: Startup Output Waveforms

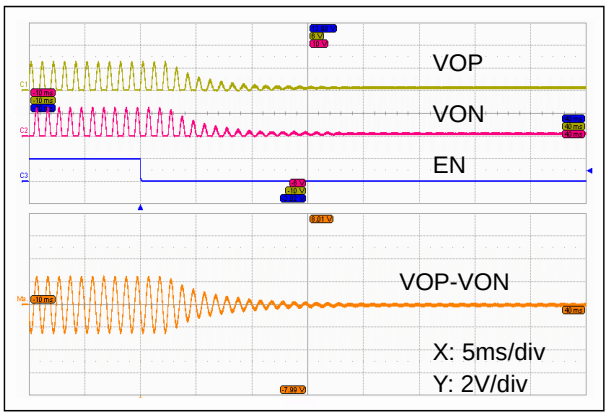

Figure 18: Shutdown Output Waveforms

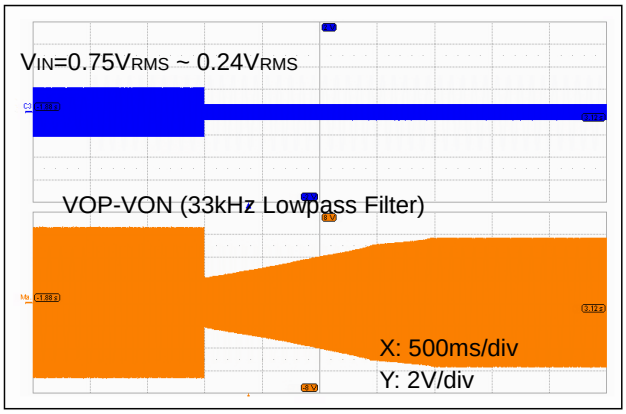

Figure 19: ALC-1 Release Time

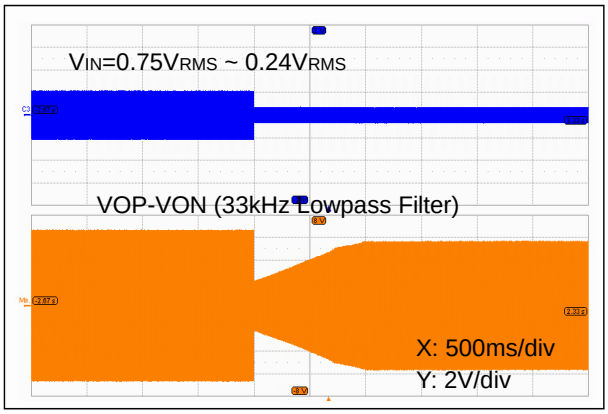

Figure 20: ALC-2 Release Time

TYPICAL PERFORMANCE CHARACTERISTICS (Cont'd)

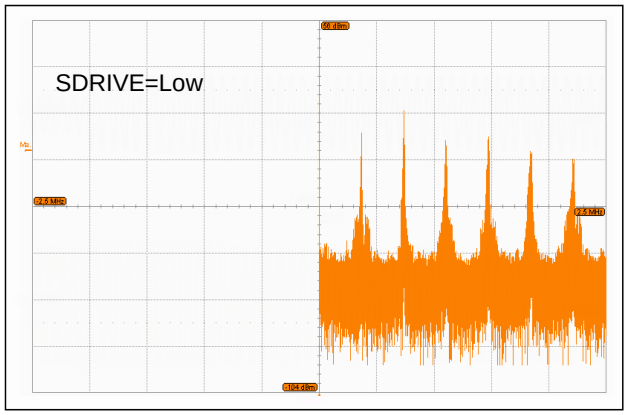

Figure 21: Wideband Output Spectrum

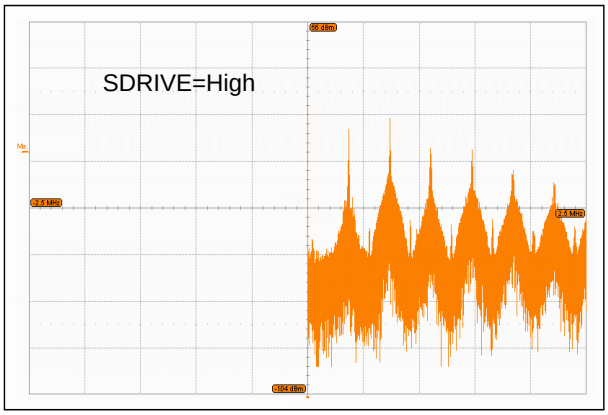

Figure 22: Wideband Output Spectrum

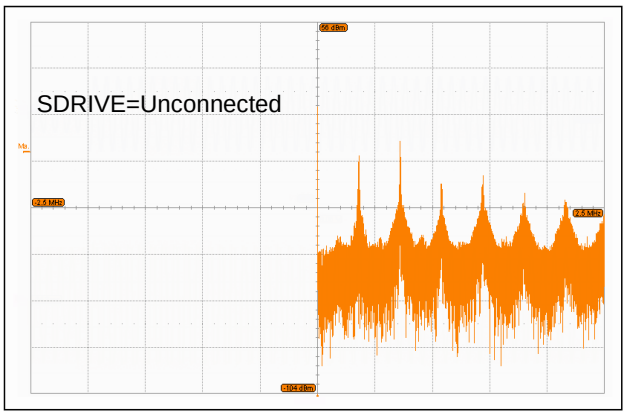

Figure 23: Wideband Output Spectrum

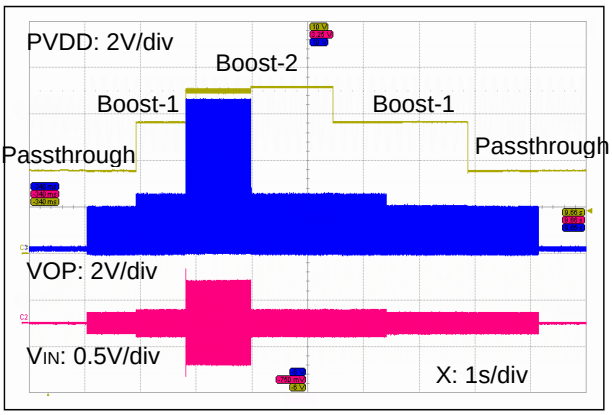

Figure 24: Mode Transitions of Boost Regulator

APPLICATION INFORMATION

The ft2925 is a highly efficient 2X6W Class-G stereo audio power amplifier with automatic level control (ALC) and battery tracking AGC. It integrates dual filterless Class-D audio amplifiers with a multi-level Class-G synchronous boost regulator and operates with a range of supply voltages from 3V to 5.5V. When operating with a 3.6V supply voltage, the ft2925 can deliver an output power of 6W per channel with 10% THD+N, or 4.8W per channel with 1% THD+N, into a pair of 4Ω speakers.

In ft2925, the power supply rails of the audio amplifiers' output stages are internally boosted and regulated by a synchronous PWM switching regulator with two integrated power switches. The boost regulator employs current-mode PWM control with proprietary multi-level Class-G operation to regulate the boosted output voltage. The adaptive nature of the Class-G boost regulator, whose output voltage varies dynamically in response to the voltage level of the audio outputs, improves overall power efficiency and extends battery life when playing music. The higher output power and greater power efficiency resulted from the Class-G boost regulator make ft2925 an ideal audio solution for battery-powered electronic devices.

The ft2925 features two modes of operation, i.e., ALC and Non-ALC, which can be selected via the ALC pin. When the ALC pin is shorted to VBAT, the ft2925 operates in Non-ALC mode, where the audio amplifiers are configured as conventional Class-D amplifiers without ALC. Conversely, when the ALC pin is unconnected or shorted to GND, the ft2925 operates in ALC mode, where the audio outputs are constantly monitored and safeguarded against the boosted supply voltage, preventing output clipping distortion, excessive power dissipation, and speaker over-load. Once an over-level condition is detected, the ALC lowers the voltage gain of both audio amplifiers together to eliminate output clipping while allowing for a maximally-allowed dynamic range of the audio outputs. The ft2925 offers two ALC dynamic characteristics for two distinctive sound effects, which are also selected via the ALC pin. In ALC mode, with a supply voltage at 3.6V, the ft2925 can deliver an ALC output power of 4.5W per channel with 0.3% THD+N, into a pair of 4Ω speakers.

In conjunction with ALC, as the battery supply voltage drops below a prescribed value, the battery tracking AGC lowers the voltage gain of both audio amplifiers to limit the peak audio outputs, preventing the collapse of battery voltage.

Furthermore, the Class-D audio amplifiers in ft2925 feature filterless PWM modulators that substantially lower or completely eliminate the requirement for external LC filters, reducing the number of external components, the system board space, and the system cost. With filterless PWM modulators, the efficiency of the audio amplifiers is also improved.

As specifically designed for portable applications, the ft2925 incorporates shutdown mode to minimize the power consumption by holding the EN pin to ground. It also includes comprehensive protection features against various operating faults such as over-current, short-circuit, over-temperature, or under-voltage for a safe and reliable operation.

ADAPTIVE BOOST REGULATOR

To allow for higher audio loudness, a Class-G boost regulator is integrated in ft2925 to boost the power supply rails (PVDDL/R) of the audio amplifiers' output stages from VBAT to a higher voltage in response to the voltage level of the audio outputs. For a proper operation, the power supply rails (PVDDL/R) must be externally shorted to PVOUT, the voltage output of the boost regulator, via sufficiently wide metal lines on the system board.

The integrated boost regulator employs fixed-frequency, peak-current PWM scheme with current mode control. The PWM switching frequency is internally set at 800kHz, which allows using smaller inductance and output capacitance for stability and results in a higher PWM control loop bandwidth. Furthermore, the adaptive boost regulator features proprietary multi-level operation. As either one of the audio outputs is higher than the first prescribed value for an extended period, the ft2925 enters into Boost-1 mode, where the boost regulator is activated to boost and regulate PVOUT at an intermediate value. As either one of the audio outputs grows higher than the second prescribed value for an extended period, the ft2925 enters into Boost-2 mode, where PVOUT is further boosted and regulated at its final value, at 7.2V, typically.

Conversely, when both audio outputs are reduced to be lower than the second prescribed value for an extended period, the boost regulator returns back to Boost-1 mode. If both audio outputs are further reduced to be lower than the first prescribed value for an extended period, the ft2925 is forced into Passthrough mode, where the boost regulator is de-biased. In Passthrough mode, the audio amplifiers' output stages are powered directly from the supply input voltage, through the inductor and on-chip rectification power switch. Thus, in Passthrough mode, PVOUT is equal to the supply input voltage minus the voltage drop across the rectification power switch.

The adaptive nature of the Class-G boost regulator in ft2925, where PVOUT varies dynamically in response to the voltage level of the audio outputs, can greatly improve overall power efficiency and extend battery life when playing music. The higher output power and greater efficiency make the ft2925 an ideal audio solution for battery-powered electronic devices.

DESIGN GUIDELINES OF BOOST REGULATOR

Selection of Boost Regulator Inductor

The selection of the inductor is the most important consideration in the design of power switching regulators since it affects the boost regulator's steady-state operation as well as dynamic response and loop stability. Three important inductor specifications are to be considered: Inductor value, DC resistance (DCR), and Saturation current. Note that inductor values may have tolerance up to ±20% with zero-current bias. Also, when the inductor current approaches its saturation limit, the effective inductance can fall to a fraction of its zero-current value. For typical applications, the recommended inductor peak (saturation) current ratings for speak loads of 4Ω and 8Ω are higher than 8A and 5A, respectively.

In general, a larger inductance value produces less inductor current ripple, which in turn results in lower inductor peak current, higher output current, lower EMI, and higher efficiency. On the other hand, a smaller inductance value, with a physically small size, results in an improved transient response with higher inductor peak current and potentially worse EMI and lower efficiency. An inductor in the range from 1.5μH to 3.3μH suffices for most applications of ft2925. Do not use any inductance higher than 4.7μH as it requires a larger output capacitance for stability of the PWM control loop, which in turn slows the boost regulator's response to load transients to a large extent with little improvements on the output current capability or efficiency. Select an inductor with DCR less than 30mΩ for higher overall efficiency (from the power supply to the speaker load).

Selection of Boost Regulator Output Capacitor

The output capacitor of the boost regulator is required to keep the output voltage ripple small and ensure the stability of the PWM control loop. The output capacitor must have low equivalent-series-resistance (ESR) at the PWM switching frequency, so ceramic capacitors are the best choice. Make sure that the output capacitors maintain their capacitances over the specified range of DC bias and operating temperature. A 22μF low-ESR ceramic capacitor suffices for most applications with speaker load impedances of 8Ω. For applications where the speaker load impedances are 4Ω or less, use a pair of 22μF low-ESR ceramic capacitors.

A bulk output capacitor (either electrolytic or tantalum) is typically added to facilitate higher voltage margin for higher audio power at low frequencies. However, be cautious using any bulk output capacitance higher than 220μF as it might adversely slow the boost regulator's response to load transients to some extent affecting audio dynamics when playing music.

Also, add a small, good quality, low-ESR ceramic capacitor of 0.1μF in close proximity to the PVOUT pins for high-frequency filtering.

The boost regulator's output, PVOUT, must be externally connected to the power supply rails of the audio amplifiers' output stages, PVDDL/R, on the system board with wide and short metal traces.

Selection of Boost Regulator Schottky Diode

A rectification power switch is integrated in the synchronous boost regulator of ft2925, thus no external

Schottky diode is necessary for applications with speaker load impedances of 8Ω. However, for applications where speaker load resistances are 4Ω or less, it is required to add an auxiliary Schottky diode across LX and PVOUT pins to improve maximum output power and overall power efficiency. The added Schottky diode must be rated for a current no less than 5A and a reverse breakdown voltage no less than 15V.

Selection of Boost Regulator Input Capacitor

In practice, supply input capacitors are required for boost regulators. The supply input capacitor acts as a charge reservoir for the inductor current, providing energy faster than the system power supply, mitigating current surges or voltage droops of the supply voltage.

At least 10µF of input capacitance is required for supply decoupling for ft2925. The rated voltage of the input capacitor must be higher than the supply input voltage with sufficient tolerance to limit the effects of dc bias. For most applications where the power supply is reasonably designed, a low-ESR ceramic capacitor of 22µF, 16V with 10mΩ ESR is sufficient for ft2925. Also, add a small, good quality, low-ESR ceramic capacitor of 0.1µF in close proximity to the inductor for high-frequency supply decoupling.

For applications where additional input capacitance is required to meet the requirement of the input current ripple or transient response, place an electrolytic or tantalum bulk capacitor between 47µF and 100µF in close proximity to ft2925. The bulk capacitor acts as a charge reservoir for the inductor current, providing energy faster than the system power supply, mitigating current surges and/or voltage droops of the supply voltage.

Boost Regulator Snubber Circuit

It is not uncommon for a boost regulator to observe voltage oscillations in a frequency range of 100 ~ 200MHz at the switch node LX due to parasitic inductances and capacitances on its high-current path. If the amplitude of the voltage ringing is above the absolute maximum rating of the LX pin, the on-chip power switches can be damaged permanently.

For applications where excessive voltage spikes or oscillations are observed due to severe restrictions on the board layout, it may become necessary to add a snubber circuit from the switch node LX to the power ground PGNDB to lower voltage spikes and eliminate voltage oscillations at the switch node. A snubber circuit, a small resistor in series with a small capacitor, is an energy-absorbing circuit to provide an alternative path to ground for the current flowing through the parasitic inductances. In practice, the snubber circuit is added to lower EMI emissions as well as enhance the operational reliability of the boost regulator.

Figure 25 shows an RC snubber circuit with suggested values of R_{LX}=1Ω and C_{LX}=2.2 ~ 10nF. Note that the design of the RC snubber circuit is specific to each application and board layout, thus the parasitic inductances and capacitances must be taken into consideration to reach proper values of R_{LX} and C_{LX}. Evaluate and ensure that the voltage spikes at LX are within the absolute maximum rating of LX on the actual system board. Pay close attention to the layout of the snubber circuit to be tight and in close proximity to LX and PGNDB pins.

Note that the RC snubber circuit will adversely affect the overall efficiency of the boost regulator by a few percent, which is a function of the C_{LX} value.

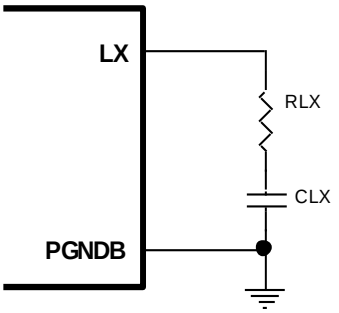

Figure 25: Boost Regulator Snubber Circuit

AUTOMATIC LEVEL CONTROL (ALC)

The automatic level control (ALC) is to maintain the audio outputs for a maximum voltage swing without clipping when excessive inputs that may cause clipping distortion are applied. With ALC, the ft2925 lowers the gain of the audio amplifiers to an appropriate value such that output clipping is substantially eliminated.

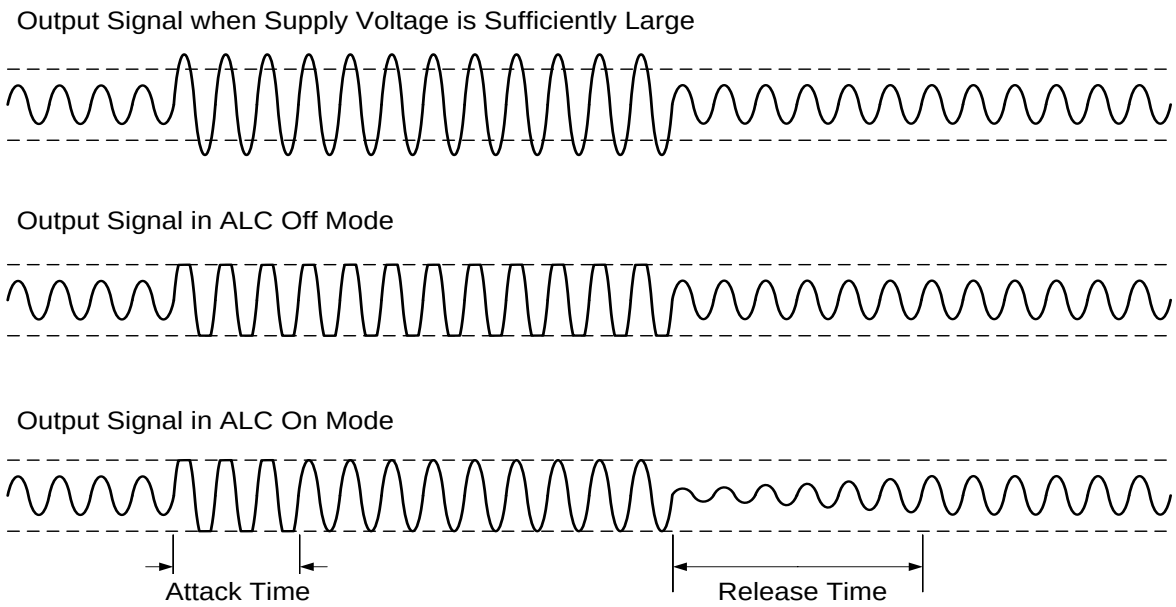

Figure 28: Automatic Level Control Diagram

The attack time and release time of the ALC are shown in Table 3. The attack time is defined as the time interval required for the gain to fall to its steady-state gain less 3dB approximately, assumed that a sufficiently large input signal is applied. The release time is the time interval required for the amplifier to exit out of the present mode of operation.

ALC	Mode of Operation	Attack Time (ms)	Release Time (s)
Low	ALC-1	6	2.0
Unconnected	ALC-2	48	1.0
High	Non-ALC	N/A	

Table 3: Attack Time & Release Time

ALC MODE CONTROL

The ft2925 can be configured in ALC or Non-ALC mode via the ALC pin, as described in Table 3. When the ALC pin is shorted to VBAT, the ft2925 operates in Non-ALC mode. The Non-ALC operation is typically chosen for applications where maximum audio loudness is much desired and output clipping distortion can be properly controlled and largely eliminated at the audio sources. Conversely, when the ALC pin is left unconnected or shorted to GND, the ft2925 operates in ALC mode with two sets of dynamic characteristics. For most applications, the ALC mode of operation is much preferred for its capability to substantially eliminate output clipping distortion, excessive power dissipation, and speaker over-load.

Two sets of ALC dynamic characteristics can be selected for specific sound effects, as described in Table 3. The ALC-1 mode, where the ALC pin is shorted to GND, tends to play music in a mellower manner with negligible amount of clipping distortion and lower average output power (loudness). On the other hand, the ALC-2 mode, where the ALC pin is left unconnected, tends to play music in a more dynamic manner with higher average output power and some extent of clipping distortion.

VOLTAGE GAIN SETTING

The voltage gain of the audio amplifiers can be externally adjusted by inserting additional input resistors in series with input capacitors, as depicted in Figure 26 and 27. In typical applications, it is required that $C_{IN} = C_{INL1} = C_{INL2} = C_{INR1} = C_{INR2}$ and $R_{IN} = R_{INL1} = R_{INL2} = R_{INR1} = R_{INR2}$.

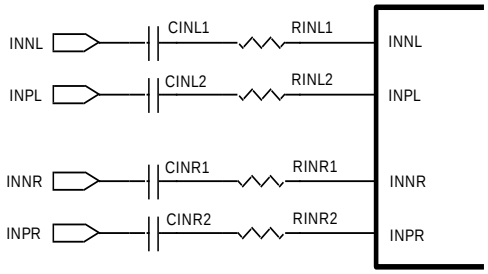

Figure 26: Gain Setting (Differential Inputs)

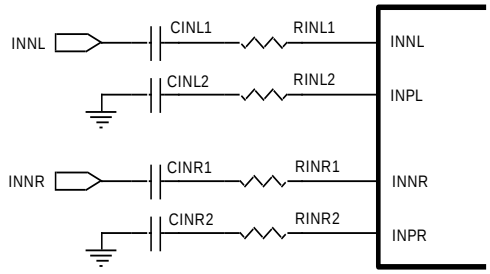

Figure 27: Gain Setting (Single-Ended Inputs)

The value of R_{IN} (in kΩ) for a given voltage gain can be calculated by Equation 1. Table 1 shows suitable resistor values of R_{IN} that can be used for various voltage gains, where A_V is the voltage gain of the audio amplifiers.

$$A_V = \frac{600}{R_{IN} + 20} \qquad (1)$$

R_{IN} (kΩ)	0	3.9	6.8	10	14	18	22	27	33	39	47	56
A_V (V/V)	30	25	22.4	20	17.6	15.8	14.3	12.8	11.3	10	9	8
A_V (dB)	29.5	28	27	26	25	24	23	22	21	20	19	18

Table 1: External Input Resistors Required for Various Voltage Gains

The choice of the voltage gain will strongly influence the loudness and quality of audio sounds. In general, the higher the voltage gain is, the louder the sound is perceived. However an excessive voltage gain may cause the audio outputs to be noticeably compressed or clipped for high-level (loud) audio sounds. On the other hand, an unusually low gain may cause relatively low-level (quite) sounds soft or inaudible. Thus it is crucial to choose a proper voltage gain for well balanced audio quality.

The voltage gain is chosen based upon various system-level considerations including the boosted supply voltage, dynamic range of the audio source, output power rating, and desired sound effect. The voltage gain can be simply expressed in Equation 2. In the equation, $V_{IN,\,MAX}$ (in V_{RMS}) is the maximum input level from the audio source, PVDD (in volts) is the boosted supply voltage, and α is the design parameter, which ranges from 0.65 to 2.5. The higher α is, the higher the average output power (louder) is, with some degree of compression for high-level audio sounds.

$$A_V = \frac{\alpha \times PVDD}{V_{IN,\,MAX}} \qquad (2)$$

As an example, Table 2 shows the voltage gain for various audio input levels with α at about 1.2. In the table, R_{IN} is the external input resistor in series with the input capacitor.

$V_{IN,\,MAX}$ (V_{RMS})	R_{IN} (kΩ)	A_V (V/V)	A_V (dB)
0.30	3.9	25	28
0.50	15	17	25
0.70	27	13	22
1.0	47	9	19

Table 2: Typical Voltage Gain Settings for Various Audio Input Levels

SOFT DRIVE MODE

To facilitate low EMI operation to minimize FM interference, the ft2925 features proprietary edge-rate-control gate drivers for both Class-D audio amplifiers and the Class-G boost regulator. In the soft drive mode, the EMI emissions will be largely reduced at the expense of lower power efficiency, however, much higher than the traditional Class-AB audio amplifiers. Furthermore, to further reduce EMI emissions, the boost regulator can be disabled at the expense of much lower maximum output power due to the limited power supply (the battery voltage) available to the audio amplifiers. Three operating modes are available in ft2925 and can be selected via the SDRIVE pin, as described in Table 4.

SDRIVE	Boost Regulator	Driver Mode	Description
Low	Enable	High Efficiency Drive	High Efficiency, High Power
Unconnected	Disable	Soft Drive	Lowest EMI, Low Power Operation
High	Enable	Soft Drive	Low EMI, Medium Power Operation

Table 4: Soft Drive Mode Control

BATTERY TRACKING AGC

The ft2925 features battery tracking AGC to limit the peak audio outputs as the battery voltage droops. Although it will affect audio output loudness on low battery voltages, the battery tracking AGC limits high battery current at the end-of-charge battery voltage and prevents the battery voltage from collapsing, which might cause a reset of the system. The battery tracking AGC keeps the peak audio outputs below a limiting value that is a function of the battery supply voltage. The peak output voltage is maintained at PVDD for battery voltages down to the knee voltage and reduced linearly at a rate of 4V/V for lower battery voltages. The knee voltage of the battery tracking AGC can be selected via the VKNEE pin, as described in Table 5. Note that the battery tracking AGC can be enabled only when the ALC function is enabled where the ALC pin is pulled low or left unconnected.

VKNEE	Knee Voltage (V)
Low	Battery Tracking AGC Disabled
Unconnected	3.15
High	3.40

Table 5: Battery Tracking AGC Control

The operation of the battery tracking AGC can be highly influenced by the electrical characteristics of the battery used with ft2925. Place a small decoupling resistor of 10Ω between the battery supply voltage and the VBAT pin in conjunction with a decoupling capacitor of 1μF, mitigating the detrimental effect of high battery current ripples on the detection of battery voltage.

SHUTDOWN AND STARTUP

The ft2925 employs the EN pin to minimize power consumption while it is not in use. When the EN pin is pulled to ground, the ft2925 is forced into shutdown mode, where all the analog circuitry is de-biased and the supply current is reduced to be less than 1μA, and the differential outputs are shorted to ground through an internal resistor (3kΩ) individually. Once in shutdown mode, the EN pin must remains low for at least 40ms (T_{SD}), the shutdown settling time, before it can be brought high again. When the EN pin is asserted high, the device exits out of shutdown mode and enters into normal operation after the startup time (T_{STUP}) of 80ms.

Note that an internal pulldown resistor of 300kΩ is included onto the EN pin. Thus, shutdown mode is the state when the power supply is first applied to the device. Whenever possible, it is recommended to assert EN high to exit the device out of shutdown mode only after the device is properly started up. Also, place the amplifier in shutdown mode prior to removing the power supply voltage for the best power-off pop performance.

VOLUME FADE-IN & FADE-OUT

The volume fade-in/out function is activated whenever the EN state is toggled. It can reduce intermittent sound considerably and eliminate uncomfortable hearing experience.

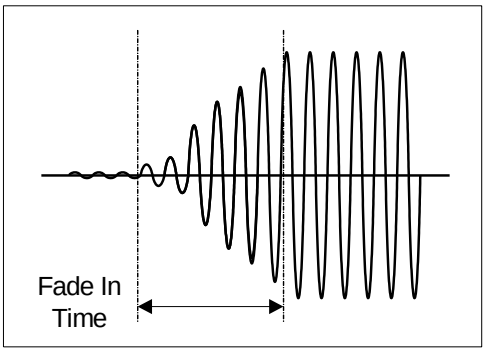

Figure 29: Fade-In Output Waveform

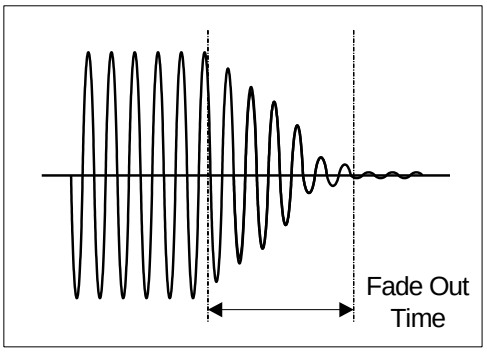

Figure 30: Fade-Out Output Waveform

CLICK-AND-POP SUPPRESSION

The ft2925 features comprehensive click-and-pop suppression. During startup, the click-and-pop suppression circuitry reduces any audible transients internal to the device. When entering into shutdown, the differential audio outputs ramp down to ground simultaneously.

PSRR ENHANCEMENT

Without a dedicated pin for the common-mode voltage bias, the ft2925 achieves a PSRR, 70dB at 1kHz.

PROTECTION MODES

To ensure a safe operation, the ft2925 incorporates various protection modes against operating faults, including Under-voltage Lockout (UVLO), Over-Current Protection (OCP), and Over-Temperature Shutdown (OTSD).

Under-Voltage Lockout (UVLO)

The ft2925 incorporates a circuitry to detect a low supply voltage for a safe and reliable operation. When the supply voltage is first applied, the ft2925 will remain inactive until the supply voltage exceeds 2.3V (V_{UVLU}). When the supply voltage is removed and drops below 2.0V (V_{UVLD}), the ft2925 enters into shutdown mode immediately.

Over-Temperature Shutdown (OTSD)

When the die temperature exceeds a preset threshold (160°C), the device enters into over-temperature shutdown mode, where the audio outputs are pulled to ground through their individual on-chip resistors (3kΩ). The device will resume normal operation once the die temperature returns to a lower temperature, which is about 20°C lower than the threshold.

Over-Current Protection (OCP)

During operation, the output of Class-D amplifier constantly monitors for any over-current or short-circuit conditions. When an over-current condition between two differential outputs, differential output to PVDDL/R or PGND is detected, the output stage of the amplifier is immediately forced into high impedance state. Once the fault condition persists over a prescribed period, the ft2925 then enters into shutdown mode and remains in this mode for about 8ms. When shutdown mode times out, the ft2925 will initiate another startup sequence and then check if the over-current condition has been removed. If the fault condition is still present, the ft2925 will repeat itself for the process of a startup followed by detection, qualification, and shutdown. It is the so-called hiccup mode of operation. Once the fault condition is removed, the ft2925 automatically resumes normal operation.

Although the output stages of the Class-D audio amplifiers can withstand a short between VOPL/R and VONL/R, do not connect any audio outputs directly to GND, PVOUT, or PVDDL/R as this might damage the device permanently.

CLASS-D AUDIO AMPLIFIER

The Class-D audio amplifiers in the ft2925 operate in much the same way as traditional Class-D amplifiers and similarly offer much higher power efficiency than Class-AB amplifiers. The high efficiency of Class-D operation is achieved by the switching operation of the output stage of the amplifier. The power loss associated with the output stage is limited to the conduction and switching loss of the power switches, which are much less than the power loss associated with a linear output stage in Class-AB amplifiers.

Fully Differential Amplifier

The ft2925 includes a pair of fully differential amplifiers with differential inputs and outputs. The fully differential amplifiers ensure that the differential output voltages are equal to the differential input voltages times the amplifier gain. Although the ft2925 supports for a single-ended input, differential inputs are much preferred for applications where the environment can be noisy in order to ensure maximum SNR.

Low-EMI Filterless Output Stage

Traditional Class-D audio amplifiers require for the use of external LC filters, or shielding, to meet EN55022B electromagnetic-interference (EMI) regulation standards. The ft2925 applies an edge-rate control circuitry to reduce EMI emissions, while maintaining high power efficiency.

Filterless Design

Traditional Class D amplifiers require an output filter to recover the audio signal from the amplifier's output. The filter adds cost, increases the solution size of the amplifier, and can adversely affect efficiency and THD performance. The traditional PWM scheme uses large differential output swings (twice of the supply voltage) and causes large ripple currents. Any parasitic resistance in the filter components results in loss of power and lowers the efficiency.

The ft2925 does not require an output filter. The device relies on the inherent inductance of the speaker coil and the natural filtering of both the speaker and the human ear to recover the audio component of the square-wave output. By eliminating the output filter, a smaller, less costly, and more efficient solution can be accomplished.

Because the frequency of the audio outputs from ft2925 is well beyond the bandwidth of most speakers, voice coil movement due to the square-wave frequency is very small. Although this movement is small, a speaker not designed to handle the additional power can be damaged. For optimum performance, use speakers with series inductances greater than 10uH. Typical 4Ω speakers exhibit series inductances in the range from 10μH to 47uH.

EMI Reduction

The ft2925 does not require an LC output filter for the connections from the amplifier to the speaker. However, additional EMI suppression can be made by use of a ferrite bead filter comprising a ferrite bead and a capacitor, as shown in Figure 31. Choose a ferrite bead with low DC resistance (DCR) and high impedance (100Ω ~ 330Ω) at high frequencies (>100MHz). The current flowing through the ferrite bead must be also taken into consideration. The effectiveness of ferrites can be greatly aggravated at much lower than the rated current values. Choose a ferrite bead with a rated current no less than 2A for an 8Ω load and 3A for a 4Ω load. The capacitor value varies based on the ferrite bead chosen and the actual speaker lead length. Choose a capacitor less than 1nF based on EMI performance. Place each ferrite bead filter tightly together and individually close to VOPL/R and VONL/R pins respectively.

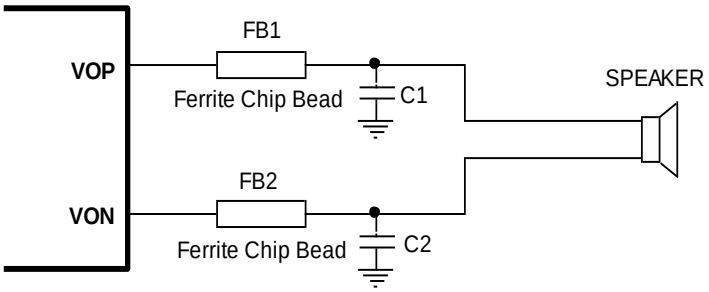

Figure 31: Ferrite Bead Filter to Reduce EMI

Class-D Output Snubber Circuit

For applications where speaker load resistances are 4Ω or less, it may become necessary to add a snubber circuit across the two output pins, VOPL/R and VONL/R, to prevent the device from accelerated deterioration or abrupt destruction due to excessive inductive flybacks that are induced on fast output switching or by an over-current or short-circuit condition. The snubber circuit can further lower EMI emission of Class-D outputs.

Figure 32 shows a simple RC snubber circuit with suggested values of R=4.7Ω in series with C=4.7nF. Note that the design of the RC snubber circuit is specific to each application and must take into account the parasitic reactance of the system board to reach proper values of R and C. Evaluate and ensure that the voltage spikes (overshoots and undershoots) at VOPL/R and VONL/R on the actual system board are within their absolute maximum ratings. Pay close attention to the layout of the RC snubber circuit to be tight and individually close to VOPL/R and VONL/R pins, respectively.

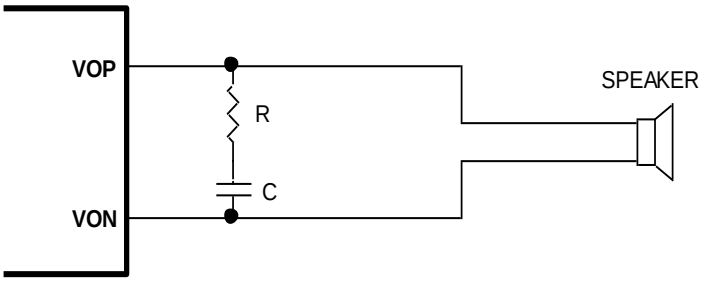

Figure 32: Class-D Output RC Snubber Circuit

Input Capacitor (C_{IN})

DC decoupling capacitors for audio inputs (INPL/R and INNL/R) are recommended. The input audio DC decoupling capacitors will remove the DC bias from audio inputs. The input capacitor C_{IN} and the total input resistance (R_{IN} + 20kΩ) form a highpass filter with the corner frequency, f_C, determined by Equation 3.

$$f_C = 1 / [2 \times \pi \times (R_{IN} + 20k\Omega) \times C_{IN}] \qquad (3)$$

where $R_{IN}=R_{INL1}=R_{INL2}=R_{INR1}=R_{INR2}$ and $C_{IN}=C_{INL1}=C_{INL2}=C_{INR1}=C_{INR2}$

R_{IN} is the external input resistance for a specific voltage gain. Note that the variation of the actual input resistance will affect the voltage gain proportionally. Thus choose R_{IN} with a tolerance of 2% or better.

Choose C_{IN} such that f_C is well below the lowest frequency of interest. Setting it too high affects the amplifiers' low-frequency response. Consider an example where the specification calls for A_V=25dB and a flat frequency response down to 20Hz. In this example, R_{IN}=15kΩ and C_{IN} is calculated to be about 0.23µF; thus any capacitance between 0.22µF and 0.47µF can be chosen for C_{IN}.

Note that any mismatch in resistance and capacitance between two audio inputs will cause a mismatch in the corner frequencies. Severe mismatch may also cause turn-on pop noise, PSRR, CMRR performance. Choose both resistors and capacitors with a tolerance of ±2% or better.

Furthermore, the type of the input capacitor is crucial to audio quality. For best audio quality, use capacitors whose dielectrics have low voltage coefficients, such as tantalum or aluminum electrolytic. Capacitors with high voltage coefficients, such as ceramics, may result in increased distortion at low frequencies.

Supply Decoupling Capacitors (C_{VBAT}, $C_{PVDDL/R}$, C_{AVDD}, C_{BVDD})

Sufficient decoupling of the power supplies is crucial for audio amplifiers to ensure high efficiency, low distortion, and low EMI. Place a 1µF low-ESR ceramic capacitor (C_{VBAT}) in close proximity to the VBAT pin. Furthermore, add a small decoupling resistor (R_{VBAT}) of 10Ω between the system power supply and the VBAT pin, minimizing the detrimental effect of high battery current ripples on the detection of battery voltage.

Place a 1µF low-ESR ceramic capacitor ($C_{PVDDL/R}$) individually close to each PVDDL/R pin.

Place a 1µF low-ESR ceramic capacitor C_{AVDD} close to the AVDD pin. This capacitor type and placement of C_{AVDD} help minimize higher frequency transients, spikes, or digital hash on the supply line. Furthermore, add a

small decoupling resistor (R_{AVDD}) of 10Ω between AVDD and PVOUT pins, preventing high frequency transients of PVOUT from interfering with on-chip linear amplifiers.

Place a 0.1μF low-ESR ceramic capacitor C_{BVDD} close to the BVDD pin for high-frequency filtering.

PRINTED CIRCUIT BOARD (PCB) LAYOUT GUIDELINES

Ground Plane - It is required to use a solid metal plane with sufficiently wide area as a central ground connection (GND) for ft2925. All ground pins (AGND, PGND, and PGNDB) are directly shorted to the ground plane.

Supply Decoupling capacitors – The supply decoupling capacitors (C_{VBAT}, $C_{PVDDL/R}$, C_{AVDD}, and C_{BVDD}) should be placed as individually close to VBAT, PVDDL/R, AVDD, and BVDD pins as possible.

Boost Regulator Input Capacitor - Place the supply input capacitor (C_S) in close proximity to the inductor. They should be on the same layer of the system board with ft2925.

Boost Regulator Inductor & Schottky Diode - Place the inductor and Schottky diode tightly together and in close proximity to the LX pins. They should be on the same layer of the system board with ft2925.

Boost Regulator Snubber Circuit - Place the snubber circuit (R_{LX} and C_{LX}) tightly together and in close proximity to the LX pins. They should be on the same layer of the system board with ft2925.

Boost Regulator Output Capacitors - Place the output capacitors (C_{PVOUT}) in close proximity to the PVOUT pins.

Ferrite Bead Filter - The ferrite bead filters of the Class-D amplifiers' outputs should be placed as individually close to audio output pins, VOPL/R and VONL/R, as possible for optimum EMI performance. Keep the current loop from each of the audio outputs through the ferrite bead and the capacitor and back to PGND as short and tight as possible.

Power Dissipation - The maximum output power of ft2925 can be severely limited by its thermal dissipation capability. To ensure the device operates properly and reliably at maximum output power without incurring over-temperature shutdown, the following guidelines are given for optimization of its thermal dissipation capability:

- Fill both top and bottom layers of the system board with solid GND metal traces.
- Solder the thermal pad directly onto a grounded metal plane.
- Place lots of equally-spaced vias underneath the thermal pad connecting the top and bottom layers of GND. The vias are connected to a solid metal plane on the bottom layer of the board.
- Reserve wide and uninterrupted areas along the thermal flow on the top layer, i.e., no wires cutting through the GND layer and obstructing the thermal flow.
- Place all the passive devices (Inductor, Schottky diode, and Input/output capacitors) of the boost regulator tightly together and on the same layer of the board with ft2925.
- Avoid using vias for traces carrying high current.

PCB LAYOUT EXAMPLE

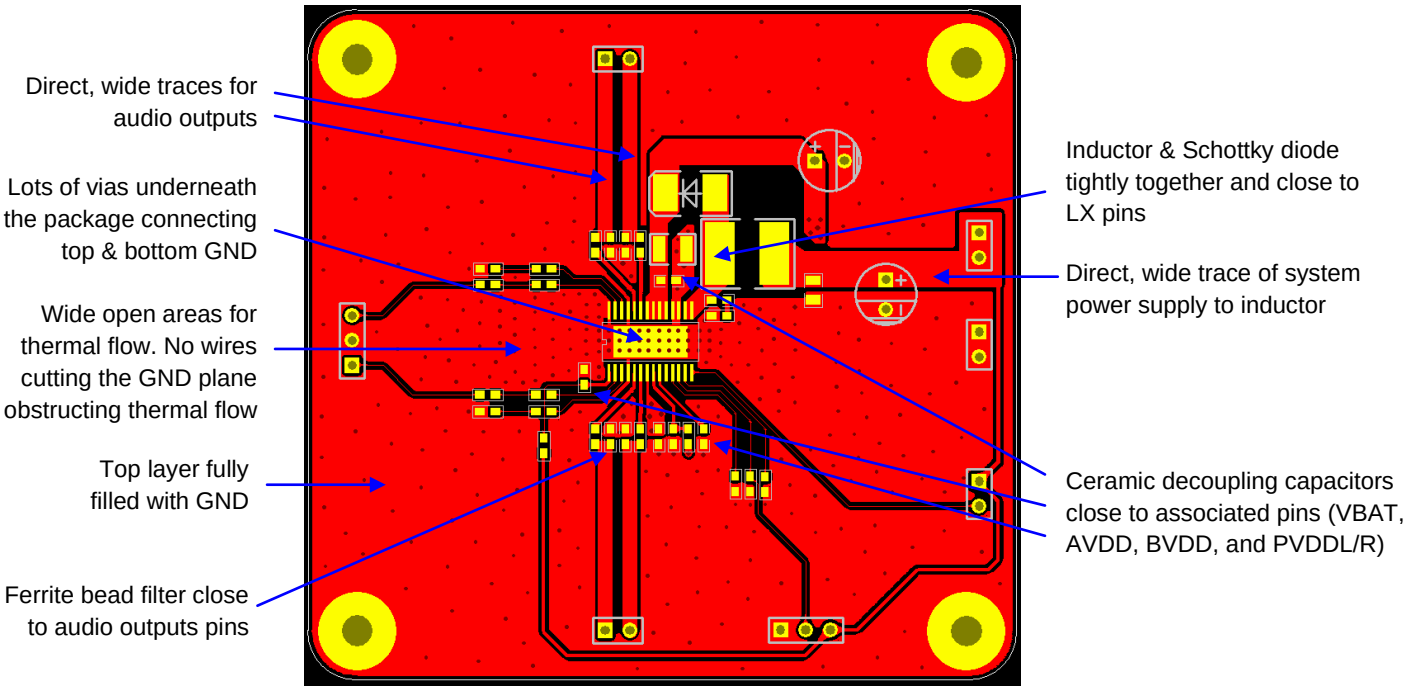

Figure 33: Top Layer of Layout Example

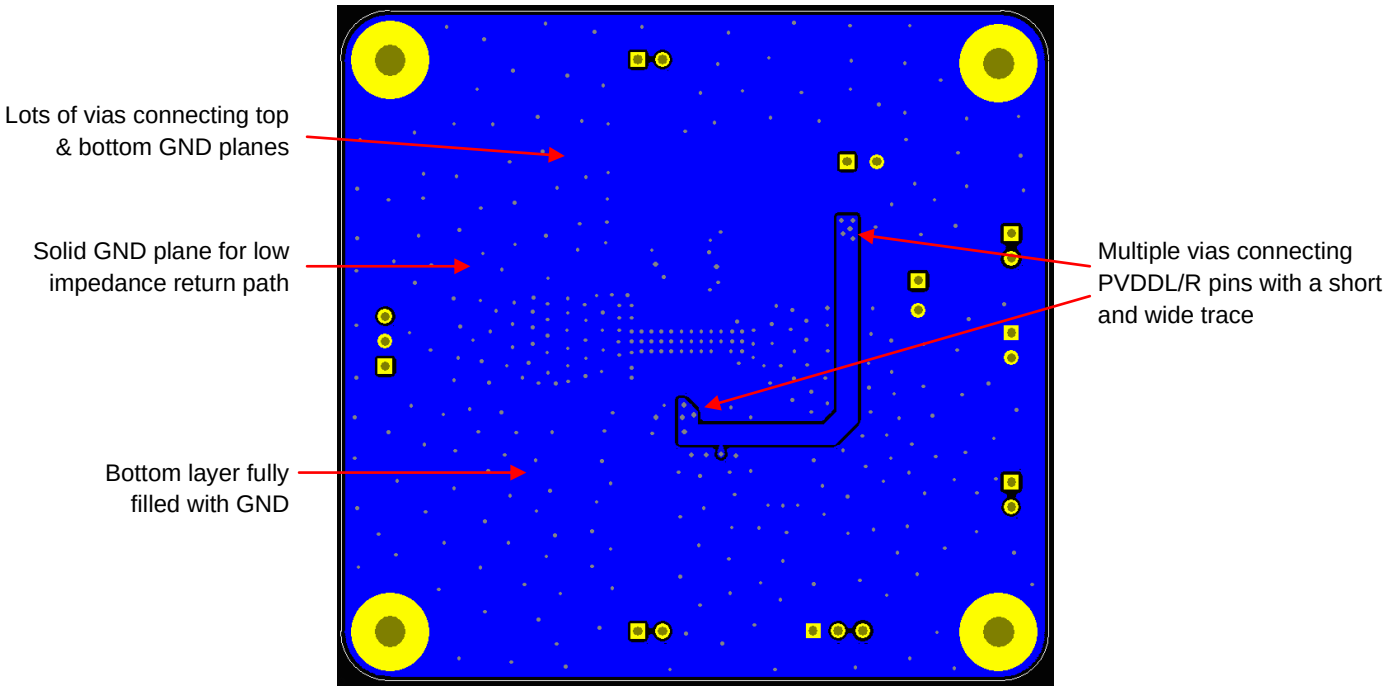

Figure 34: Bottom Layer of Layout Example

TYPICAL APPLICATION CIRCUITS

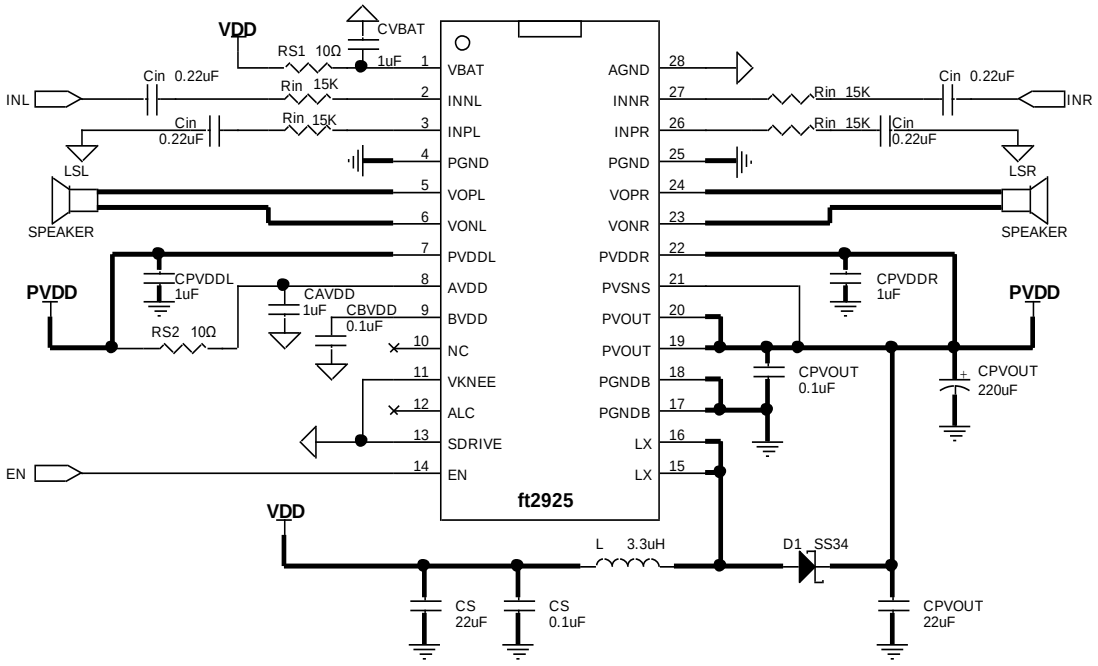

Figure 35: Single-Ended Inputs with High Efficiency Drive in ALC-2 Mode

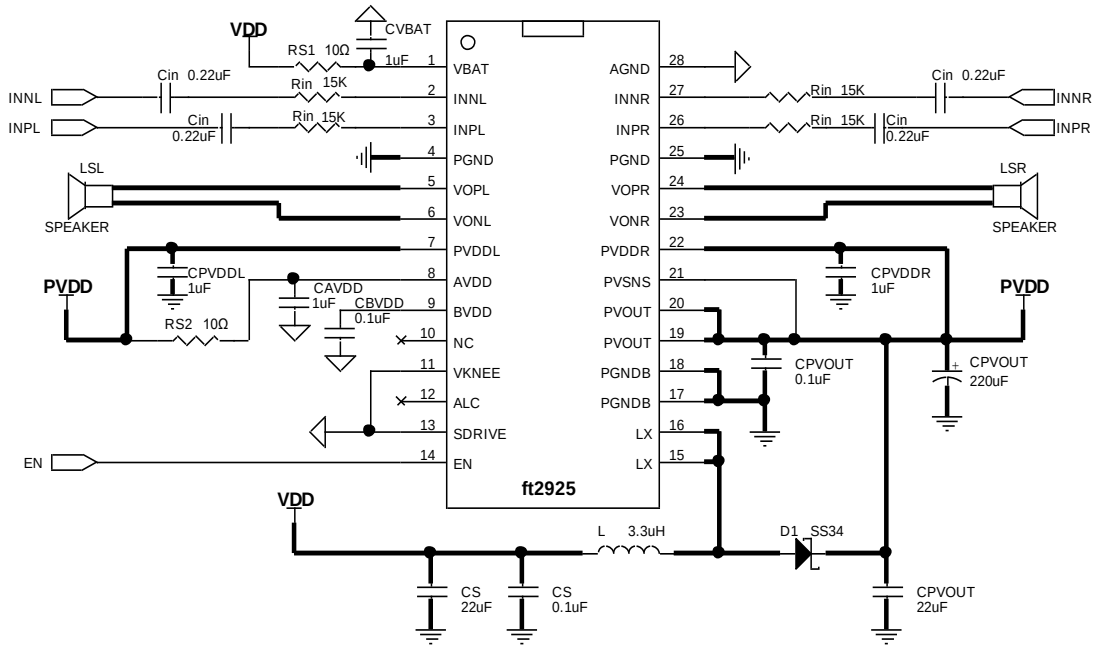

Figure 36: Differential Inputs with High Efficiency Drive in ALC-2 Mode

Note: The bold lines indicate high current paths and their respective traces are required to be as wide and short as possible on the system board for optimum performance in maximum output power, power efficiency, THD+N, and EMI emissions.

TYPICAL APPLICATION CIRCUITS (Cont'd)

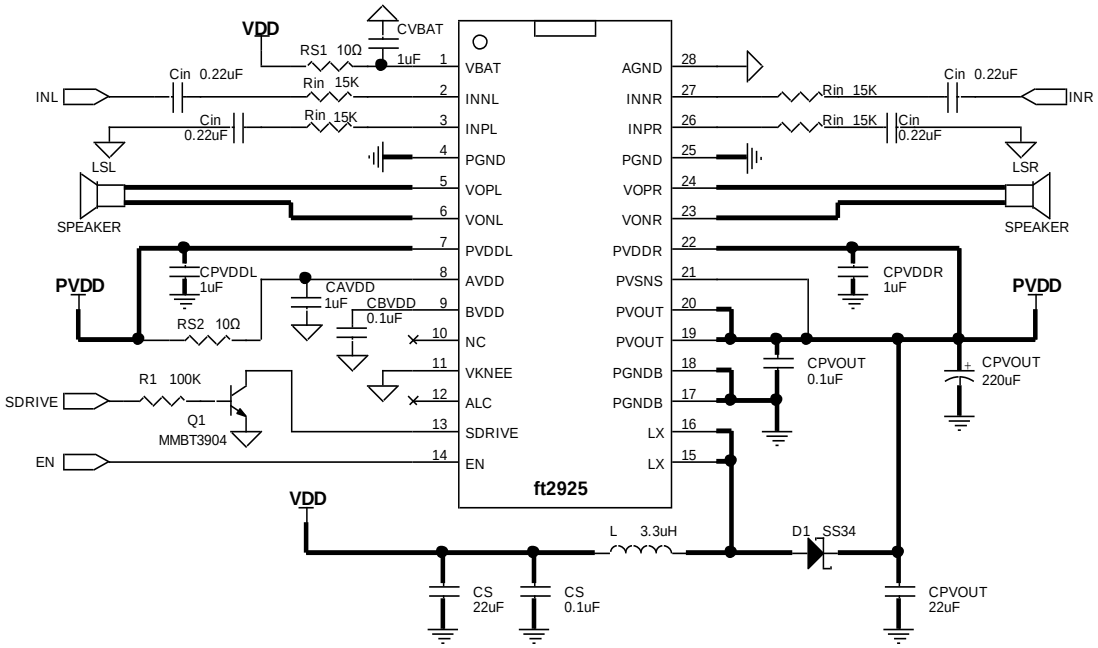

Figure 37: Single-Ended Inputs with Soft Drive Control in ALC-2 Mode

Note: The bold lines indicate high current paths and their respective traces are required to be as wide and short as possible on the system board for optimum performance in maximum output power, power efficiency, THD+N, and EMI emissions.

PHYSICAL DIMENSIONS

TSSOP-28L PACKAGE OUTLINE DIMENSIONS

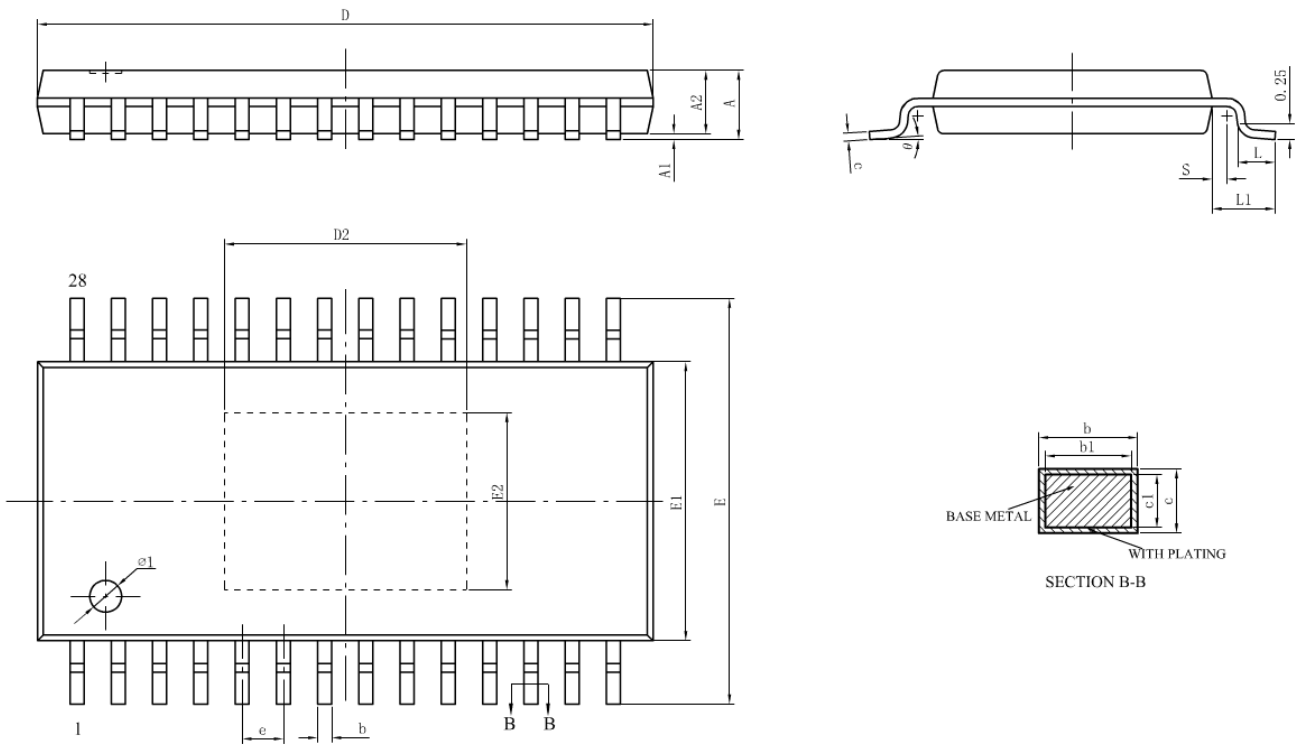

SYMBOL	MILLIMETER		
	MIN	NOM	MAX
A	—	—	1.20
A1	0.05	—	0.15
A2	0. 80	—	1. 00
b	0.19	—	0.30
b1	0.19	0.22	0.25
c	0.09	—	0.20
c1	0.09	—	0.16
D	9.60	9.70	9.80
D2	3.71	3.81	3.91

SYMBOL	MILLIMETER		
	MIN	NOM	MAX
E	6.25	6.40	6.55
E1	4.30	4.40	4.50
E2	2.69	2.79	2.89
e	0.65BSC		
L	0. 50	0. 60	0. 70
L1	1.00BSC		
S	0.20	—	—
Ø1	Ø1.0X0. 05~0. 10DP		
θ	1	—	7°

IMPORTANT NOTICE

1. Disclaimer: The information in document is intended to help you evaluate this product. Fangtek, LTD. makes no warranty, either expressed or implied, as to the product information herein listed, and reserves the right to change or discontinue work on this product without notice.

2. Life support policy: Fangtek's products are not authorized for use as critical components in life support devices or systems without the express written approval of the president and general counsel of Fangtek Inc. As used herein

Life support devices or systems are devices or systems which, (a) are intended for surgical implant into the body, or (b) support or sustain life, and whose failure to perform when properly used in accordance with instructions for use provided in the labeling, can be reasonably expected to result in a significant injury to the user.

A critical component is any component of a life support device or system whose failure to perform can be reasonably expected to cause the failure of the life support device or system, or to affect its safety or effectiveness.

3. Fangtek assumes no liability for incidental, consequential or special damages or injury that may result from misapplications or improper use or operation of its products

4. Fangtek makes no warranty or representation that its products are subject to intellectual property license from Fangtek or any third party, and Fangtek makes no warranty or representation of non-infringement with respect to its products. Fangtek specifically excludes any liability to the customer or any third party arising from or related to the products' infringement of any third party's intellectual property rights, including patents, copyright, trademark or trade secret rights of any third party.

5. The information in this document is merely to indicate the characteristics and performance of Fangtek products. Fangtek assumes no responsibility for any intellectual property claims or other problems that may result from applications based on the document presented herein. Fangtek makes no warranty with respect to its products, express or implied, including, but not limited to the warranties of merchantability, fitness for a particular use and title.

6. Trademarks: The company and product names in this document may be the trademarks or registered trademarks of their respective manufacturers. Fangtek is trademark of Fangtek, LTD.

CONTACT INFORMATION

Fangtek Electronics (Shanghai) Co., Ltd

Room 501A, Lane 198, Zhangheng Road

Zhangjiang Hi-tech Park, Pudong District

Shanghai, China, 201204

Tel: +86-21-61631978

Fax: +86-21-61631981

Website: www.fangtek.com.cn