深圳市拓普微科技开发有限公司

SHENZHEN TOPWAY TECHNOLOGY CO., LTD.

LM2028-12

LCD Module User Manual

Prepared by:	Checked by:	Approved by:
Liqin		
Date: 2009-09-21	Date:	Date:

Rev.	Descriptions	Release Date
0.1	New release	2009-09-21

Download from alldatasheet.com

Table of Content

1. Basic Specifications 3
1.1 Display Specifications 3
1.2 Mechanical Specifications 3
1.3 Block Diagram 3
1.4 Terminal Functions(FFC) 4
1.5 Backlight Termianl 4
2. Absolute Maximum Ratings 5
3. Electrical Characteristics 5
3.1 DC Characteristics 5
3.2 LED Backlight Circuit Characteristics 5
3.3 AC Characteristics 6
4. Function Specifications 7
4.1 Adjusting the Display Contrast 7
4.2 Display Pixel Map 7
4.3 Signal Sequence 8
5. Design and Handling Precaution 9

Download from alldatasheet.com

1. Basic Specifications

1.1 Display Specifications

1) LCD Display Mode : STN, Negative, Transmissive
2) Display Color : Display Data = “1” : Light Gray (*1)
: Display Data = “0” : Deep Blue (*2)
3) Viewing Angle : 6 H
4) Driving Method : 1/240 duty, 1/17 bias
5) Backlight : White LED backlight

Note:
*1. Color tone may slightly change by Temperature and Driving Condition.
*2. The Color is defined as the inactive / background color

1.2 Mechanical Specifications

1) Outline Dimension : 166.0 x 109.0 x 12.2MAX(Exclude FFC terminal)
see attached Outline Drawing for details

1.3 Block Diagram

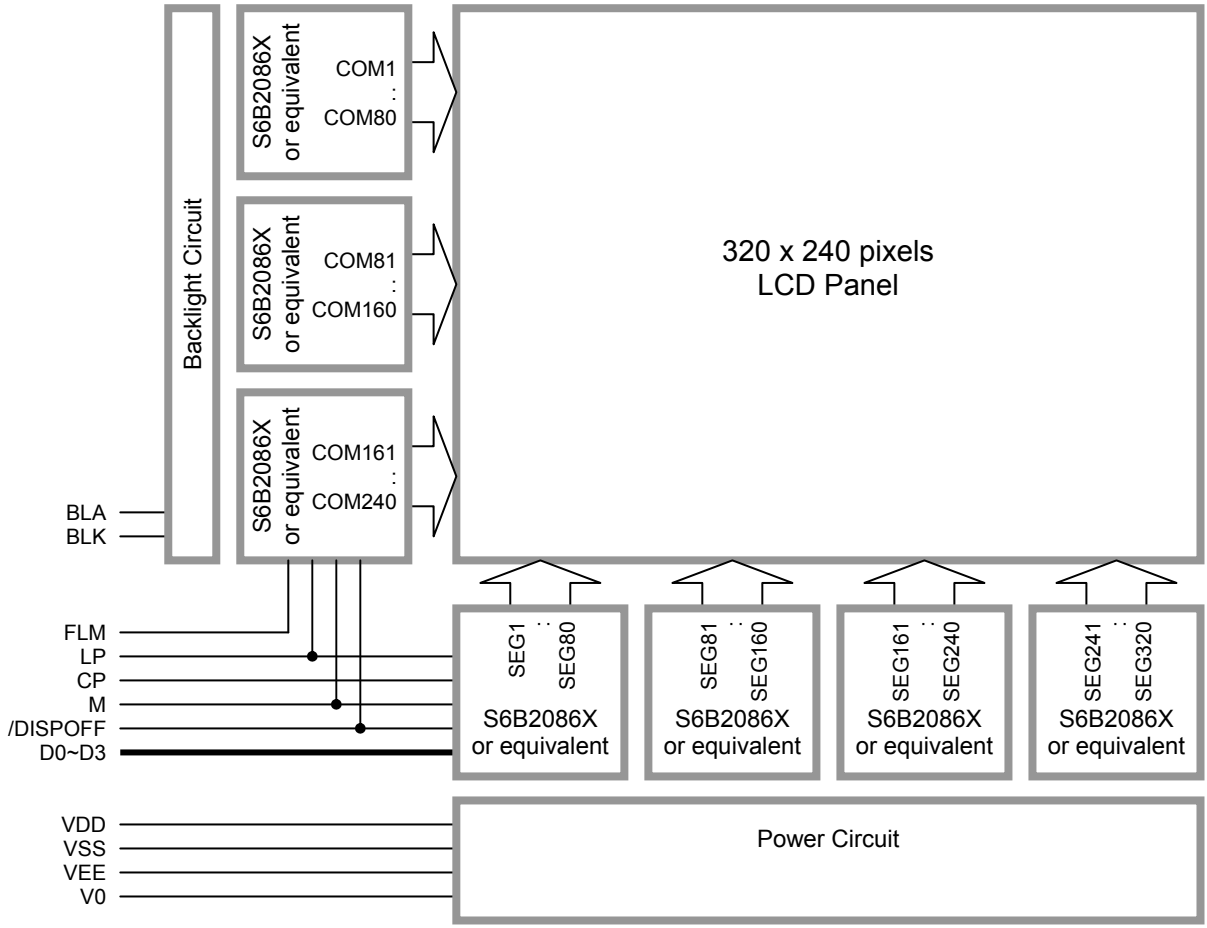

Download from alldatasheet.com

1.4 Terminal Functions(FFC)

Pin No. K5	Pin Name	I/O	Descriptions
1	FLM	Input	First Line Marker
2	LP	Input	Line Pulse signal, for latching the segment buffer to the segment driver
3	CP	Input	Clock Pulse signal, for shifting the data (D0~D3) into the segment buffer
4	M	Input	Controlling signal for the LCD AC driving
5	V0	Input	LCD contrast setting reference
6	VDD	Power	Positive Power Supply
7	VSS	Power	0V Power Supply, Ground
8	VEE	Power	Negative Power Supply for Driving LCD
9	D0	Input	Display Data
10	D1	Input	Display Data
11	D2	Input	Display Data
12	D3	Input	Display Data
13	/DISPOFF	Input	Display ON/OFF control signal, /DISPOFF = 0, display off /DISPOFF = 1, display on
14	NC	-	No Connection, keep open

BLA&BLK are not on FFC terminal

1.5 Backlight Termianl

Pin No. K6	Pin Name	I/O	Descriptions
15	BLA	Power	LED Backlight Positive Supply
16	BLK	Power	LED Backlight Negative Supply

Download from alldatasheet.com

2. Absolute Maximum Ratings

Items	Symbol	Min.	Max.	Unit	Condition
Supply Voltage	V_{DD}	-0.3	+6.0	V	V_{SS} = 0V
Input Voltage	V_{IN}	V_{SS}-0.3	V_{DD}+0.3	V	V_{SS} = 0V
LCD Driving Voltage	V_{DD}-V_{EE}	V_{SS}	30	V	V_{SS} = 0V
Operating Temperature	T_{OP}	0	50	°C	No Condensation
Storage Temperature	T_{ST}	-20	70	°C	No Condensation

Cautions:
Any Stresses exceeding the Absolute Maximum Ratings may cause substantial damage to the device. Functional operation of this device at other conditions beyond those listed in the specification is not implied and prolonged exposure to extreme conditions may affect device reliability.

3. Electrical Characteristics

3.1 DC Characteristics

V_{SS}=0V, V_{DD} =5.0V, T_{OP} =25°C

Items	Symbol	MIN.	TYP.	MAX.	Unit	Applicable Pin
Operating Voltage	V_{DD}	3.0	-	5.5	V	VDD
LCD Driving Voltage	V_{DD}-V_{EE}	25	-	28	V	VEE
Input High Voltage	V_{IN}	0.8xVDD	-	VDD	V	D0~D3, CP, LP, FLM, M /DISPOFF
Input Low Voltage	V_{IN}	0	-	0.2x VDD	V	D0~D3, CP, LP, FLM, M /DISPOFF
Operating Current	I_{DD}	-	3.5	13.0	mA	VDD

3.2 LED Backlight Circuit Characteristics

BLK=0V, If_{BLA}=272mA, T_{OP} =25°C

Items	Symbol	MIN.	TYP.	MAX.	Unit	Applicable Pin
Forward Voltage	Vf_{BLA}	-	3.7	-	V	BLA, BLK
Forward Current	If_{BLA}	-	-	320	mA	BLA, BLK

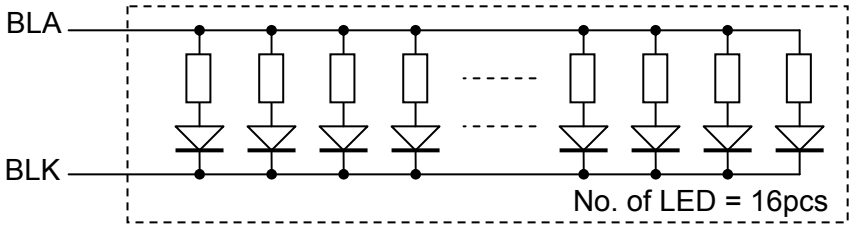

Download from alldatasheet.com

3.3 AC Characteristics

V_{SS}=0V, V_{DD}=5.0V, T_{OP}=25°C

Item	Symbol	MIN.	TYP.	MAX.	Unit
Clock cycle time	tcy	160	-	-	ns
Clock pulse width	twck	57	-	-	ns
Rise time	tr	-	-	24	ns
Fall time	tf	-	-	24	ns
Data set-up time	tds	38	-	-	ns
Data hold time	tdh	38	-	-	ns
Clock set-up time	tcs	100	-	-	ns
Clock hold time	tch	100	-	-	ns
/DISPOFF low pulse width	twdl	1500	-	-	ns
/DISPOFF clear time	tcd	125	-	-	ns

V_{SS}=0V, V_{DD}=3.3V, T_{OP}=25°C

Item	Symbol	MIN.	TYP.	MAX.	Unit
Clock cycle time	tcy	315	-	-	ns
Clock pulse width	twck	120	-	-	ns
Rise time	tr	-	-	24	ns
Fall time	tf	-	-	24	ns
Data set-up time	tds	82	-	-	ns
Data hold time	tdh	82	-	-	ns
Clock set-up time	tcs	150	-	-	ns
Clock hold time	tch	150	-	-	ns
/DISPOFF low pulse width	twdl	1500	-	-	ns
/DISPOFF clear time	tcd	125	-	-	ns

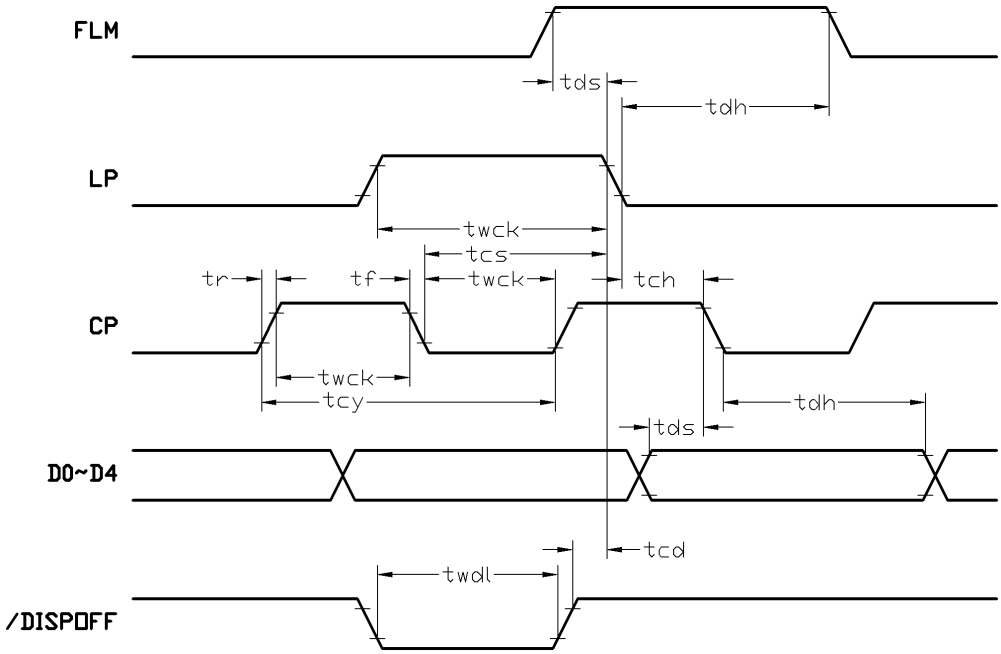

Interface Timing Digram

Download from alldatasheet.com

4. Function Specifications

4.1 Adjusting the Display Contrast

A Variable-Resistor must be connected to the LCD module for providing a reference to V0. Adjusting the VR will result the change of LCD display contrast. The recommended value of VR is 25k to 50k

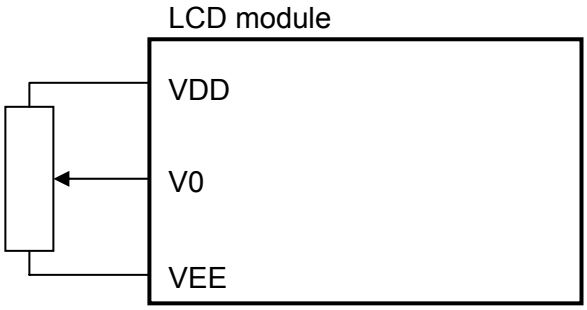

4.2 Display Pixel Map

1,1 (D3)	2,1 (D2)	3,1 (D1)	4,1 (D0)	5,1 (D3)	- - -	- - -	316,1 (D0)	317,1 (D3)	318,1 (D2)	319,1 (D1)	320,1 (D0)
1,2 (D3)	2,2 (D2)	3,2 (D1)	4,2 (D0)	5,2 (D3)	- - -	- - -	316,2 (D0)	317,2 (D3)	318,2 (D2)	319,2 (D1)	320,2 (D0)
1,3 (D3)	2,3 (D2)	3,3 (D1)	4,3 (D0)	5,3 (D3)	- - -	- - -	316,3 (D0)	317,3 (D3)	318,3 (D2)	319,3 (D1)	320,3 (D0)
: : :	: : :	: : :	: : :	: : :	: : :	: : :	: : :	: : :	: : :	: : :	: : :
1,238 (D3)	2,238 (D2)	3,238 (D1)	4,238 (D0)	5,238 (D3)	- - -	- - -	316,238 (D0)	317,238 (D3)	318,238 (D2)	319,238 (D1)	320,238 (D0)
1,239 (D3)	2,239 (D2)	3,239 (D1)	4,239 (D0)	5,239 (D3)	- - -	- - -	316,239 (D0)	317,239 (D3)	318,239 (D2)	319,239 (D1)	320,239 (D0)
1,240 (D3)	2,240 (D2)	3,240 (D1)	4,240 (D0)	5,240 (D3)	- - -	- - -	316,240 (D0)	317,240 (D3)	318,240 (D2)	319,240 (D1)	320,240 (D0)

Pixel mapping (Top View)

Based on the top view of the LCD module,
the 1, 1 (x, y) pixel is the upper-left pixel;
the 320, 240 (x, y) pixel is the lower-right pixel.

Each pixel is driven by D3, D2, D1, or D0, depends on column.
The left most column, 1st column, is driven by D3,
the 2nd column is driven by D2, and so on.

Download from alldatasheet.com

4.3 Signal Sequence

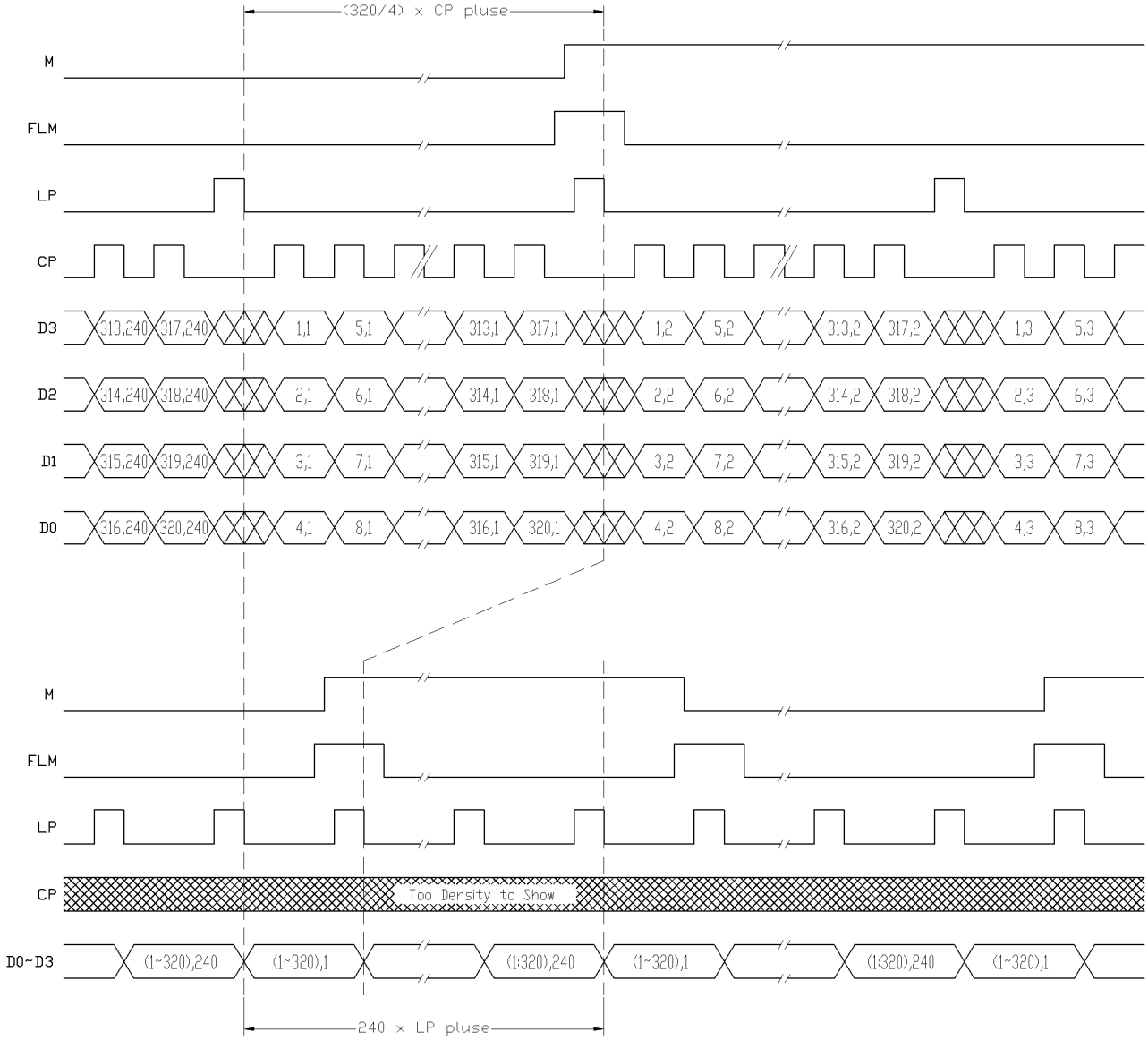

In the upper section (expended view), shows the data sequence of lines.
In the lower section (compressed view), shows the signal sequence of FLM, LP and M in frames.

Download from alldatasheet.com

5. Design and Handling Precaution

1. The LCD panel is made by glass. Any mechanical shock (eg. dropping form high place) will damage the LCD module.
2. Do not add excessive force on the surface of the display, which may cause the Display color change abnormally.
3. The polarizer on the LCD is easily get scratched. If possible, do not remove the LCD protective film until the last step of installation.
4. Never attempt to disassemble or rework the LCD module.
5. Only Clean the LCD with Isopropyl Alcohol or Ethyl Alcohol. Other solvents (eg. water) may damage the LCD.
6. When mounting the LCD module, make sure that it is free form twisting, warping and distortion.
7. Ensure to provide enough space (with cushion) between case and LCD panel to prevent external force adding on it, or it may cause damage to the LCD or degrade the display result.
8. Only hold the LCD module by its side. Never hold LCD module by add force on the heat seal or TAB.
9. Never add force to component of the LCD module. It may cause invisible damage or degrade of the reliability.
10. LCD module could be easily damaged by static electricity. Be careful to maintain an optimum anti-static work environment to protect the LCD module.
11. When peeling off the protective film from LCD, static charge may cause abnormal display pattern. It is normal and will resume to normal in a short while.
12. Take care and prevent get hurt by the LCD panel sharp edge.
13. Never operate the LCD module exceed the absolute maximum ratings.
14. Keep the signal line as short as possible to prevent noisy signal applying to LCD module.
15. Never apply signal to the LCD module without power supply.
16. IC chip (eg. TAB or COG) is sensitive to the light. Strong lighting environment could possibly cause malfunction. Light sealing structure casing is recommend.
17. LCD module reliability may be reduced by temperature shock.
18. When storing the LCD module, avoid exposure to the direct sunlight, high humidity, high temperature or low temperature. They may damage or degrade the LCD module

Download from alldatasheet.com