HSF

NOTES:
Current Rating: 2.0AMP
Contact Resistance: 20mΩ Max
Withstand Voltage: 1000V AC/DC
Insulation Resistance: 1000MΩ Min
Operation Temperature: −40℃ to +105℃

Contact Material: Brass
Contact plating: Au Or Sn over Ni
Insulator Material: LCP+30%G.F UL94V−0

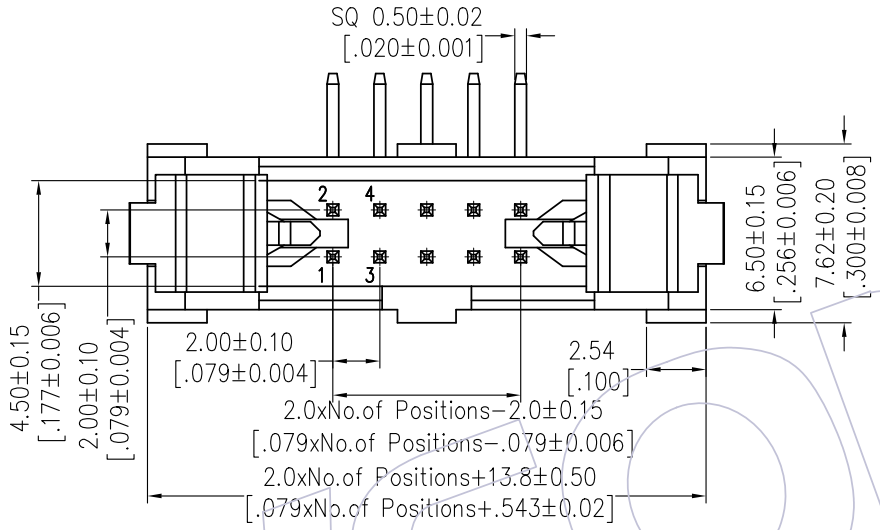

Recommended P.C.B Layout(Top Side)
(PCB BOARD TOLERANCE±0.05)

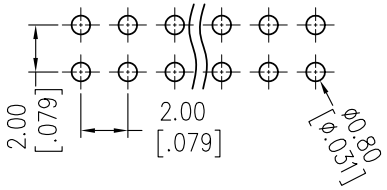

Ordering Information

3221- XX R XX B S X 1

No.of Pins	Contact Plating	Insulator Color	Packing
06 30 08 34 10 40 14 44 16 50 20 60 24 64 26	G0=Gold Flash G3=10u"Gold G4=15u"Gold G5=30u"Gold S0=Gold Flash/Tin S3=10u"Gold/Tin S4=15u"Gold/Tin S5=30u"Gold/Tin SN=Tin	B=Black	T=Tube

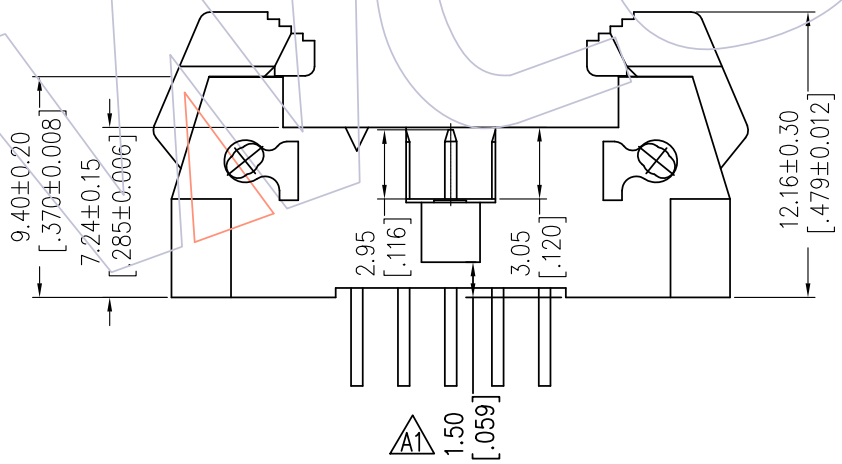

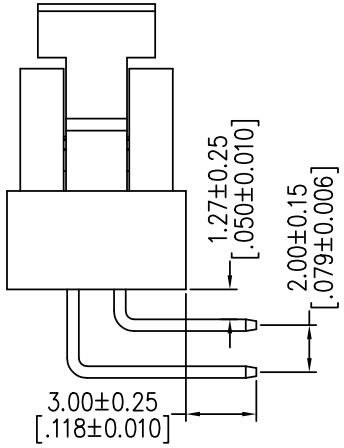

Item	Pitch	Mating
Standard	2.00	5225
Alternate		

REV	DATE	MODIFICATION DESCRIPTION	CHANGE
A1	2020/05/14	Modify Bump Add 1.50mm A1	DuYing
A0	2012/10/08	NEW	JYHuang

OPERATION	
X.X	±0.40
X.XX	±0.25
X.XXX	±0.15
Angle	± 3°
DIM	TOL

DRAW	DuYing	DATE	2020/05/14
CHECK		DATE	
APPROVE		DATE	

SCALE	FIT
UNIT	mm
SIZE	A4
SHEET	1/1
PROJ.	

PART NO. 3221-XXRXXBSX1

TITLE: 2.0 Ejector Header"S" Type 90°

Customer NO.

WCON
Http: www.wcon.com

WCON-Dongguan
Tel: +86 769 85358920
Fax: +86 769 85358915
E-mail: sales@wcon.com

WCON-Kunshan
Tel: +86 512 57468408
Fax: +86 512 57468468
E-mail: salesks@wcon.com