2N3724
2N3725
2N3725A

NPN SILICON TRANSISTOR

TO-39 CASE

Central Semiconductor Corp.

www.centralsemi.com

DESCRIPTION:
The CENTRAL SEMICONDUCTOR 2N3724, 2N3725, 2N3725A types are Silicon NPN Planar Epitaxial Transistors designed for high voltage, high current, high speed switching applications.

MARKING: FULL PART NUMBER

MAXIMUM RATINGS: (T_A=25°C)	**SYMBOL**	**2N3724**	**2N3725**	**2N3725A**	**UNITS**
Collector-Base Voltage	V_{CBO}	50	80	80	V
Collector-Emitter Voltage	V_{CEO}	30	50	50	V
Emitter-Base Voltage	V_{EBO}		6.0		V
Continuous Collector Current	I_C		1.2		A
Peak Collector Current	I_{CM}		1.75		A
Power Dissipation	P_D	0.8	0.8	1.0	W
Power Dissipation (T_C=25°C)	P_D	3.5	3.5	5.0	W
Operating and Storage Junction Temperature	T_J, T_{stg}		-65 to +200		°C

ELECTRICAL CHARACTERISTICS: (T_A=25°C unless otherwise noted)

		2N3724		**2N3725**		**2N3725A**		
SYMBOL	**TEST CONDITIONS**	**MIN**	**MAX**	**MIN**	**MAX**	**MIN**	**MAX**	**UNITS**
I_B	V_{CE}=50V	-	10	-	-	-	-	µA
I_B	V_{CE}=80V	-	-	-	10	-	10	µA
I_{CBO}	V_{CB}=40V	-	1.7	-	-	-	-	µA
I_{CBO}	V_{CB}=40V, T_A=100°C	-	120	-	-	-	-	µA
I_{CBO}	V_{CB}=60V	-	-	-	1.7	-	0.5	µA
I_{CBO}	V_{CB}=60V, T_A=100°C	-	-	-	120	-	50	µA
I_{CES}	V_{CE}=50V	-	10	-	-	-	-	µA
I_{CES}	V_{CE}=80V	-	-	-	10	-	10	µA
BV_{CBO}	I_C=10µA	50	-	80	-	80	-	V
BV_{CES}	I_C=10µA	50	-	80	-	80	-	V
BV_{CEO}	I_C=10mA	30	-	50	-	50	-	V
BV_{EBO}	I_E=10µA	6.0	-	6.0	-	6.0	-	V
$V_{CE(SAT)}$	I_C=10mA, I_B=1.0mA	-	0.25	-	0.25	-	0.25	V
$V_{CE(SAT)}$	I_C=100mA, I_B=10mA	-	0.20	-	0.26	-	0.26	V
$V_{CE(SAT)}$	I_C=300mA, I_B=30mA	-	0.32	-	0.40	-	0.40	V
$V_{CE(SAT)}$	I_C=500mA, I_B=50mA	-	0.42	-	0.52	-	0.52	V
$V_{CE(SAT)}$	I_C=800mA, I_B=80mA	-	0.65	-	0.80	-	0.80	V
$V_{CE(SAT)}$	I_C=1.0A, I_B=100mA	-	0.75	-	0.95	-	0.90	V
$V_{BE(SAT)}$	I_C=10mA, I_B=1.0mA	-	0.76	-	0.76	-	0.76	V
$V_{BE(SAT)}$	I_C=100mA, I_B=10mA	-	0.86	-	0.86	-	0.86	V
$V_{BE(SAT)}$	I_C=300mA, I_B=30mA	-	1.1	-	1.1	-	1.0	V
$V_{BE(SAT)}$	I_C=500mA, I_B=50mA	0.80	1.1	0.80	1.1	0.80	1.1	V
$V_{BE(SAT)}$	I_C=800mA, I_B=80mA	-	1.5	-	1.5	-	1.3	V
$V_{BE(SAT)}$	I_C=1.0A, I_B=100mA	-	1.7	-	1.7	0.90	1.4	V

R1 (5-December 2010)

2N3724
2N3725
2N3725A

NPN SILICON TRANSISTOR

ELECTRICAL CHARACTERISTICS - Continued: (T_A=25°C unless otherwise noted)

SYMBOL	TEST CONDITIONS	2N3724 MIN	2N3724 MAX	2N3725 MIN	2N3725 MAX	2N3725A MIN	2N3725A MAX	UNITS
h_{FE}	V_{CE}=1.0V, I_C=10mA	30	-	30	-	30	-	
h_{FE}	V_{CE}=1.0V, I_C=100mA	60	150	60	150	60	150	
h_{FE}	V_{CE}=1.0V, I_C=300mA	40	-	40	-	40	-	
h_{FE}	V_{CE}=1.0V, I_C=500mA	35	-	35	-	35	-	
h_{FE}	V_{CE}=2.0V, I_C=800mA	25	-	20	-	25	-	
h_{FE}	V_{CE}=5.0V, I_C=1.0A	30	-	25	-	25	-	
h_{FE}	V_{CE}=5.0V, I_C=1.5A	-	-	-	-	20	-	
f_T	V_{CE}=10V, I_C=50mA, f=100MHz	300	-	300	-	300	-	MHz
C_{ob}	V_{CB}=10V, I_E=0, f=1.0MHz	-	12	-	10	-	10	pF
C_{ib}	V_{EB}=0.5V, I_C=0, f=1.0MHz	-	55	-	55	-	55	pF
t_d	V_{CC}=30V, I_C=500mA, I_{B1}=50mA	-	10	-	10	-	10	ns
t_r	V_{CC}=30V, I_C=500mA, I_{B1}=50mA	-	30	-	30	-	30	ns
t_{on}	V_{CC}=30V, I_C=500mA, I_{B1}=50mA	-	35	-	35	-	35	ns
t_s	V_{CC}=30V, I_C=500mA, I_{B1}=I_{B2}=50mA	-	50	-	50	-	50	ns
t_f	V_{CC}=30V, I_C=500mA, I_{B1}=I_{B2}=50mA	-	25	-	25	-	25	ns
t_{off}	V_{CC}=30V, I_C=500mA, I_{B1}=I_{B2}=50mA	-	60	-	60	-	60	ns
t_{on}	V_{CC}=30V, I_C=1.0A, I_{B1}=I_{B2}=100mA	-	-	-	-	-	50	ns
t_{off}	V_{CC}=30V, I_C=1.0A, I_{B1}=I_{B2}=100mA	-	-	-	-	-	50	ns

TO-39 CASE - MECHANICAL OUTLINE

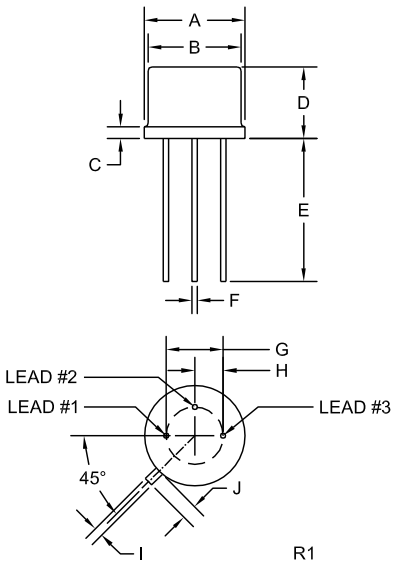

DIMENSIONS				
	INCHES		MILLIMETERS	
SYMBOL	MIN	MAX	MIN	MAX
A (DIA)	0.335	0.370	8.51	9.40
B (DIA)	0.315	0.335	8.00	8.51
C	-	0.040	-	1.02
D	0.240	0.260	6.10	6.60
E	0.500	-	12.70	-
F (DIA)	0.016	0.021	0.41	0.53
G (DIA)	0.200		5.08	
H	0.100		2.54	
I	0.028	0.034	0.71	0.86
J	0.029	0.045	0.74	1.14

TO-39 (REV: R1)

LEAD CODE:
1) Emitter
2) Base
3) Collector

MARKING:
FULL PART NUMBER

R1 (5-December 2010)