PASTERNACK®
www.pasternack.com

50 Ohm N Female To 75 Ohm F Female Matching Pad Operating From DC to 3 GHz RoHS Compliant

TECHNICAL DATA SHEET PE7074

50 Ohm N Female To 75 Ohm F Female Matching Pad Operating From DC to 3 GHz RoHS Compliant

Configuration

Design	Fixed Matching Pad
Body Style	Straight
Connector 1	N Female
Impedance 1	50 Ohms
Connector Specification 1	MIL-STD-348
Connector 2	F Female
Impedance 2	75 Ohms

Electrical Specifications

Frequency Range, GHz	DC to 3
Maximum VSWR	1.25:1
Maximum Attenuation, dB	5.7
Attenuation Accuracy	± 0.5
Maximum Input Power, Watts	2
Peak Power, Watts	250
Peak Power Duty Cycle, µs	5
Directionality	Bidirectional

Mechanical Specifications

Size

Length, in [mm]	1.88 [47.75]
Width/Dia., in [mm]	0.63 [16]
Body Material and Plating	Passivated Stainless Steel

Connector 1

Type	N Female
Inner Conductor Material and Plating	Beryllium Copper, Gold
Body Material and Plating	Passivated Stainless Steel

Connector 2

Type	F Female
Inner Conductor Material and Plating	Brass, Nickel
Body Material and Plating	Brass, Nickel

Compliance Certifications (visit www.Pasternack.com for current document)

RoHS Compliant	Yes

Click the following link (or enter part number in “SEARCH” on website) to obtain additional part information including price, inventory and certifications: 50 Ohm N Female To 75 Ohm F Female Matching Pad Operating From DC to 3 GHz RoHS Compliant PE7074

The information contained in this document is accurate to the best of our knowledge and representative of the part described herein. It may be necessary to make modifications to the part and/or the documentation of the part, in order to implement improvements. Pasternack reserves the right to make such changes as required. Unless otherwise stated, all specifications are nominal.

Pasternack Enterprises, Inc. • P.O. Box 16759, Irvine, CA 92623
Phone: (866) 727-8376 or (949) 261-1920 • **Fax:** (949) 261-7451
Sales@Pasternack.com • Techsupport@Pasternack.com

ISO 9001 : 2008 Registered

© 2013 Pasternack Enterprises All Rights Reserved

50 Ohm N Female To 75 Ohm F Female Matching Pad Operating From DC to 3 GHz RoHS Compliant

Plotted and Other Data

Notes: Values at 25 °C, sea level
75 Ohm Type N Connectors Mate Only With Other 75 Ohm Connectors. Mating With 50 Ohm Connectors May Damage Center Conductors.

50 Ohm N Female To 75 Ohm F Female Matching Pad Operating From DC to 3 GHz RoHS Compliant from Pasternack Enterprises has same day shipment for domestic and International orders. Our RF, microwave and fiber optic products maintain a 99% availability and are part of the broadest selection in the industry.

Click the following link (or enter part number in “SEARCH” on website) to obtain additional part information including price, inventory and certifications: 50 Ohm N Female To 75 Ohm F Female Matching Pad Operating From DC to 3 GHz RoHS Compliant PE7074

URL: http://www.pasternack.com/50-ohm-n-female-75-ohm-f-female-matching-pad-pe7074-p.aspx

The information contained in this document is accurate to the best of our knowledge and representative of the part described herein. It may be necessary to make modifications to the part and/or the documentation of the part, in order to implement improvements. Pasternack reserves the right to make such changes as required. Unless otherwise stated, all specifications are nominal.

Pasternack Enterprises, Inc. • P.O. Box 16759, Irvine, CA 92623
Phone: (866) 727-8376 or (949) 261-1920 • **Fax:** (949) 261-7451
Sales@Pasternack.com • Techsupport@Pasternack.com

ISO 9001 : 2008 Registered

© 2013 Pasternack Enterprises All Rights Reserved

PE7074 CAD Drawing

50 Ohm N Female To 75 Ohm F Female Matching Pad
Operating From DC to 3 GHz RoHS Compliant

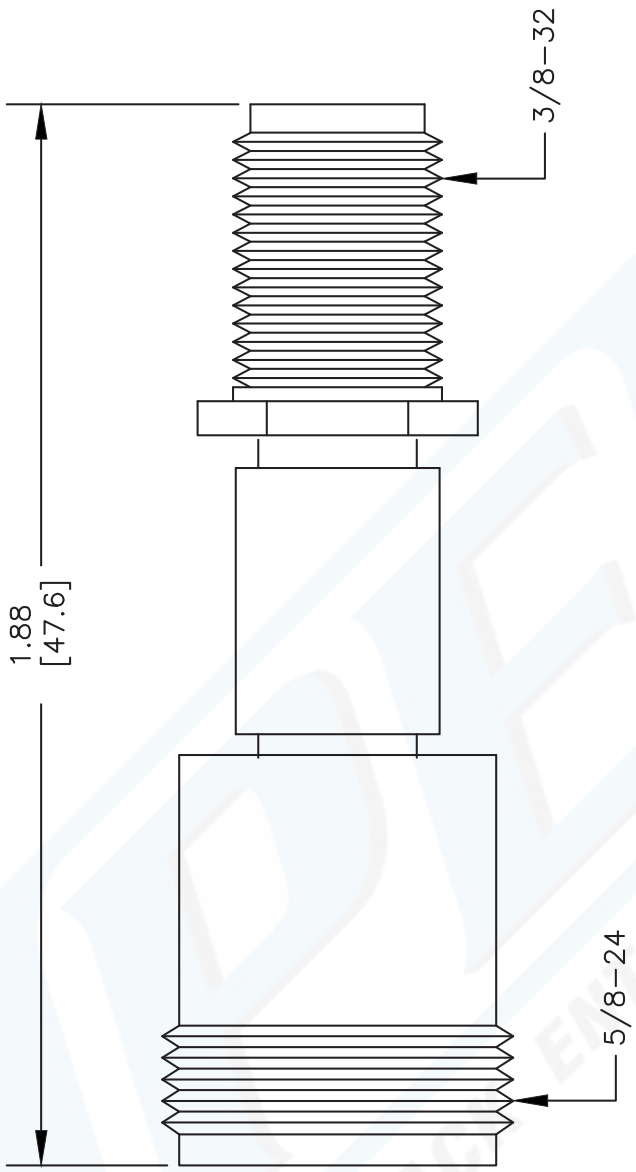

NOTES:
1. UNLESS OTHERWISE SPECIFIED ALL DIMENSIONS ARE NOMINAL.
2. ALL SPECIFICATIONS ARE SUBJECT TO CHANGE WITHOUT NOTICE AT ANY TIME.
3. DIMENSIONS ARE IN INCHES [mm].

DWG TITLE
PE7074

REV. A	FSCM NO. 53919	CAD FILE 020612	SCALE N/A	SIZE A	2233

PASTERNACK®
Pasternack Enterprises, Inc.
P.O. Box 16759 | Irvine | CA | 92623
Phone: (949) 261-1920 | **Fax:** (949) 261-7451
Website: www.pasternack.com | **E-Mail:** sales@pasternack.com

© 2013 Pasternack Enterprises All Rights Reserved