STRADA-SQ-T4-B

Wide IESNA Type IV beam with forward-throw beam for wide area lighting like car parks. Assembly with tape.

TECHNICAL SPECIFICATIONS:

Dimensions	25x25 mm
Height	11.9 mm
Fastening	tape, pin
Colour	clear
Box size	480 x 280 x 300 mm
Box weight	10.5 kg
Quantity in Box	2058 pcs
ROHS compliant	yes

MATERIAL SPECIFICATIONS:

Component	Type	Material	Colour
STRADA-SQ-T4-B	Lens	PMMA	clear
ROSE-TAPE	Tape	PU tape	black

LEDiL is a registered trademark of LEDiL Oy in the European Union, USA, and certain other countries.

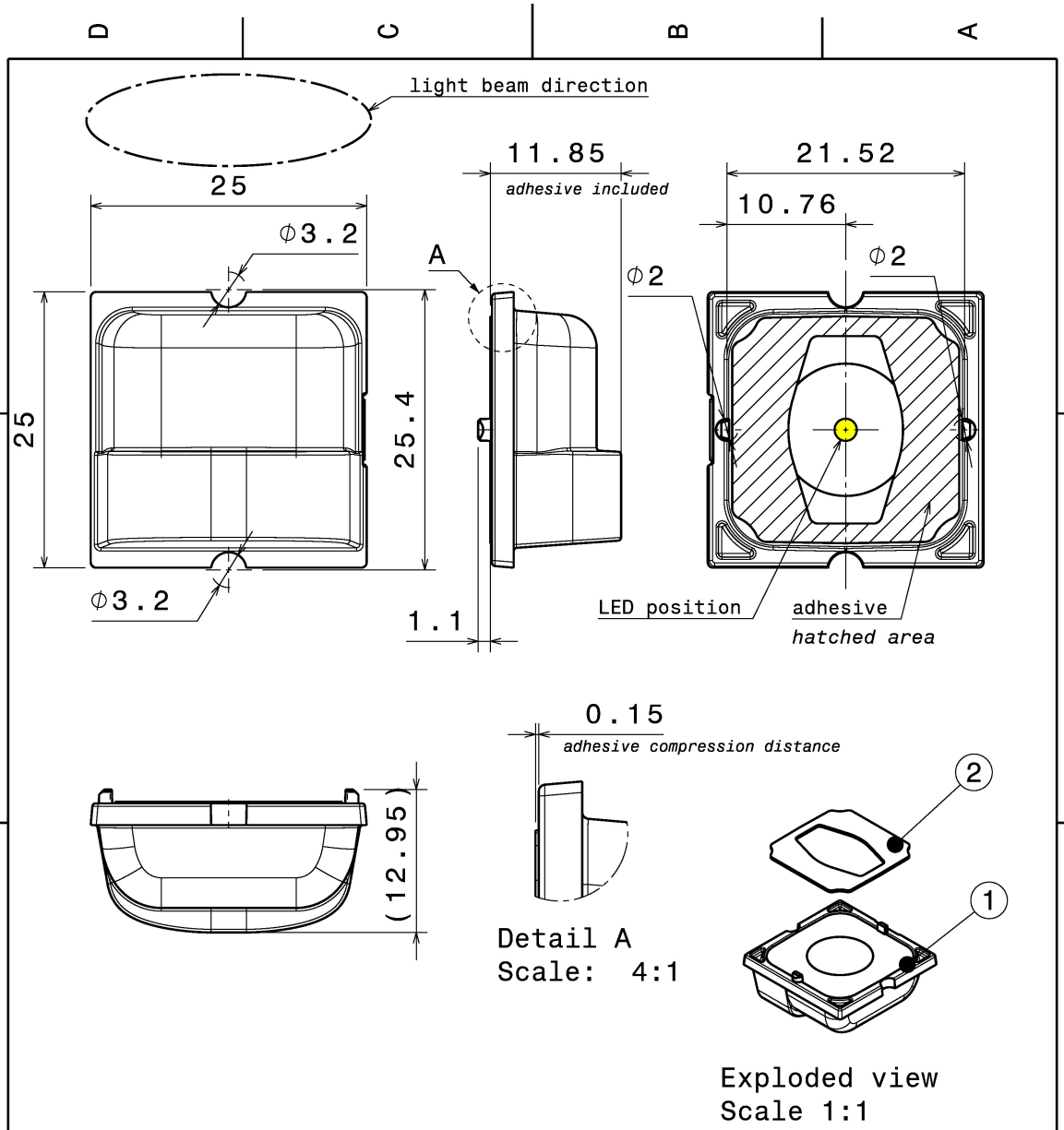

INDEX	PART NO	DESCRIPTION	MATERIAL	COLOUR
1	C16248	STRADA-SQ-T4-B_Mechanicalmodel	PMMA	clear
2	C14564	ROSE-TAPE	PU 2-sided foam tape	adhesive

Tolerances if not otherwise shown
According to DIN ISO 2768-1
Linear measures:
Up to 30mm class M, otherwise class C.
According to DIN ISO 2768-2
Form and position: class L

Ledil Oy
Salorankatu 10
FIN 24240 SALO
Finland

FIRST ANGLE PROJECTION:

DRAWING TITLE
CA16249_STRADA-SQ-T4-B

This drawing is the property of LEDiL Oy. It may not be reproduced, copied or communicated without a written agreement with LEDiL Oy.

SIZE A4
PART NUMBER CA16249

SCALE 2:1 | WEIGHT - | SHEET 1/1

LEDiL is a registered trademark of LEDiL Oy in the European Union, USA, and certain other countries.

PHOTOMETRIC DATA (MEASURED):

LUMILEDS

LED	LUXEON M/MX
FWHM	Asymmetric
Efficiency	90 %
Peak intensity	0.580 cd/lm

Required components:

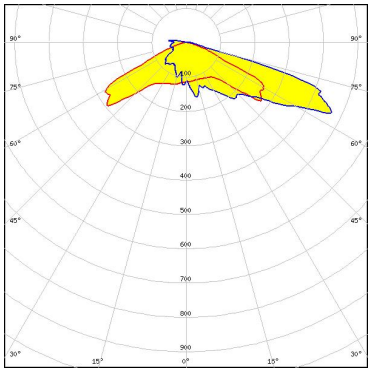

LEDiL is a registered trademark of LEDiL Oy in the European Union, USA, and certain other countries.

PHOTOMETRIC DATA (SIMULATED):

CITIZEN

LED	PSL440
FWHM	Asymmetric
Efficiency	89 %
Peak intensity	0.630 cd/lm
Required components:	

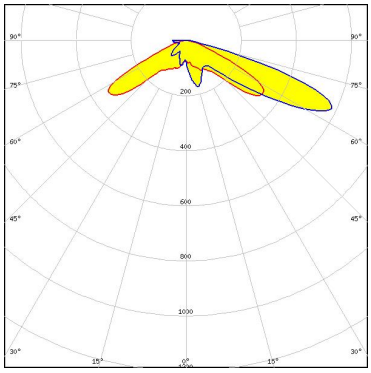

CITIZEN

LED	PSL445
FWHM	Asymmetric
Efficiency	87 %
Peak intensity	0.440 cd/lm
Required components:	

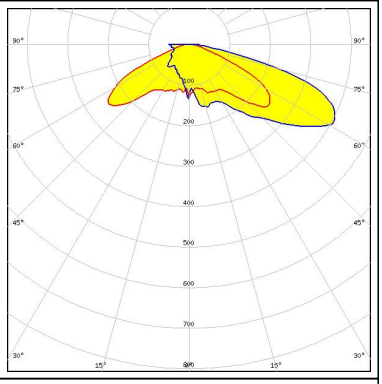

CREE

LED	XHP70
FWHM	117.0 + 60.0°
Efficiency	91 %
Peak intensity	0.510 cd/lm
Required components:	

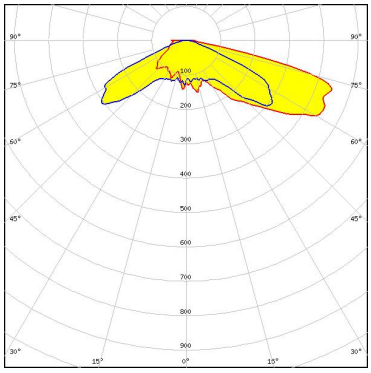

OSRAM
Opto Semiconductors

LED	OSCONIQ P 3737 (2W version)
FWHM	Asymmetric
Efficiency	91 %
Peak intensity	0.790 cd/lm
Required components:	

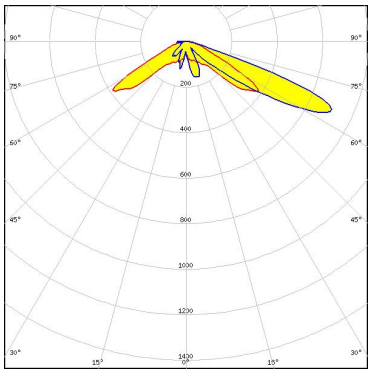

LEDiL is a registered trademark of LEDiL Oy in the European Union, USA, and certain other countries.

GENERAL INFORMATION:

NOTE: The typical beam angle will be changed by different color, chip size and chip position tolerance. The typical total beam angle is the full angle measured where the luminous intensity is half of the peak value.

MATERIALS:

As part of our continuous research and improvement processes, and to ensure the best possible quality and availability of our products, LEDiL reserves the right to change material grades without notice.

PRODUCT DATA USER AGREEMENT AND DISCLAIMER:

The measured data in the provided downloadable LEDiL Product Datasheets and Mechanical 2D-Drawings is rounded and provided as reference for planning. LEDiL Oy's optical specifications have been verified by conducting performance testing of the products in accordance with the company's quality system. The reported data are averaged results of multiple measurements with typical variation. LEDiL Oy reserves the right to without prior notification make changes and improvements to its products.

LEDiL Oy assumes neither warranty, nor guarantee nor any other liability of any kind for the contents and correctness of the provided data. The provided data has been generated with highest diligence but the provided data may in reality not represent the complete possible variation range of all intrinsic parameters. Therefore, in certain cases a deviation from the provided data could occur.

LEDiL Oy reserves the right to undertake technical changes of its products without further notification which could lead to changes in the provided data. LEDiL Oy assumes no liability of any kind for the possible deviation from any provided data or any other damage resulting from the usage of the provided data.

The user agrees to this disclaimer and user agreement with the download or usage of the provided files.

LEDiL Oy
Joensuunkatu 13
FI-24240 SALO
Finland

LEDiL Inc.
228 West Page Street
Suite D
Sycamore IL 60178
USA

Local sales and technical support
www.ledil.com/
where_to_buy

Shipping locations
Salo, Finland
Hong Kong, China

Distribution Partners
www.ledil.com/
where_to_buy

LEDiL is a registered trademark of LEDiL Oy in the European Union, USA, and certain other countries.