Phase leg MOSFET Power Module

V_{DSS} = 1200V
R_{DSon} = 650mΩ typ @ Tj = 25°C
I_D = 16A @ Tc = 25°C

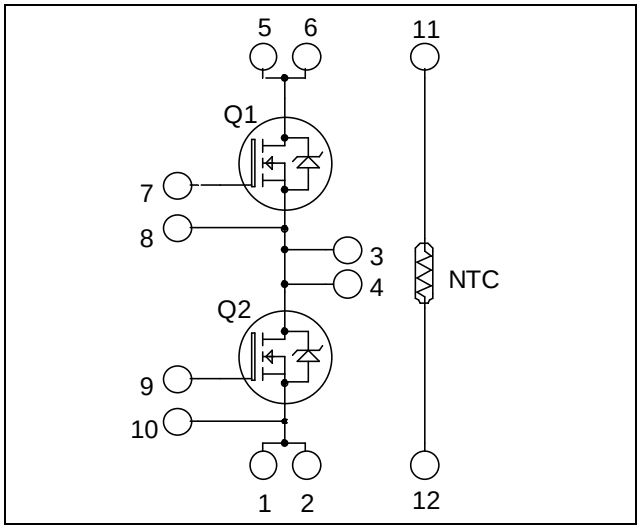

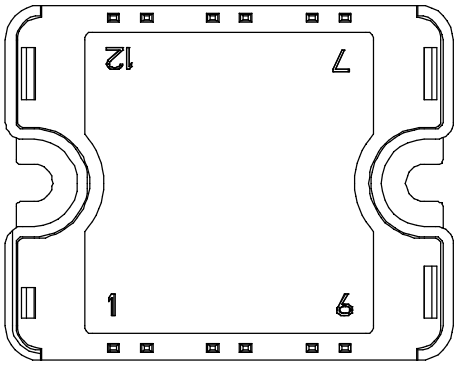

Pins 1/2 ; 3/4 ; 5/6 must be shorted together

Application

- Welding converters
- Switched Mode Power Supplies
- Uninterruptible Power Supplies
- Motor control

Features

- Power MOS 8™ Fast FREDFETs
  - Low R_{DSon}
  - Low input and Miller capacitance
  - Low gate charge
  - Fast intrinsic reverse diode
  - Avalanche energy rated
  - Very rugged
- Very low stray inductance
  - Symmetrical design
- Internal thermistor for temperature monitoring
- High level of integration

Benefits

- Outstanding performance at high frequency operation
- Direct mounting to heatsink (isolated package)
- Low junction to case thermal resistance
- Solderable terminals both for power and signal for easy PCB mounting
- Low profile
- RoHS Compliant

Absolute maximum ratings

Symbol	*Parameter*		*Max ratings*	*Unit*
V_{DSS}	Drain - Source Breakdown Voltage		1200	V
I_D	Continuous Drain Current	T_c = 25°C	16	A
		T_c = 80°C	12	
I_{DM}	Pulsed Drain current		105	
V_{GS}	Gate - Source Voltage		±30	V
R_{DSon}	Drain - Source ON Resistance		780	mΩ
P_D	Maximum Power Dissipation	T_c = 25°C	390	W
I_{AR}	Avalanche current (repetitive and non repetitive)		14	A

CAUTION: These Devices are sensitive to Electrostatic Discharge. Proper Handling Procedures Should Be Followed. See application note APT0502 on www.microsemi.com

All ratings @ T_j = 25°C unless otherwise specified

Electrical Characteristics

Symbol	Characteristic	Test Conditions		Min	Typ	Max	Unit
I_{DSS}	Zero Gate Voltage Drain Current	V_{DS} = 1200V V_{GS} = 0V	T_j = 25°C			250	µA
			T_j = 125°C			1000	
$R_{DS(on)}$	Drain – Source on Resistance	V_{GS} = 10V, I_D = 14A			650	780	mΩ
$V_{GS(th)}$	Gate Threshold Voltage	V_{GS} = V_{DS}, I_D = 2.5mA		3	4	5	V
I_{GSS}	Gate – Source Leakage Current	V_{GS} = ±30 V				±100	nA

Dynamic Characteristics

Symbol	Characteristic	Test Conditions	Min	Typ	Max	Unit
C_{iss}	Input Capacitance	V_{GS} = 0V V_{DS} = 25V f = 1MHz		7736		pF
C_{oss}	Output Capacitance			715		
C_{rss}	Reverse Transfer Capacitance			92		
Q_g	Total gate Charge	V_{GS} = 10V V_{Bus} = 600V I_D = 14A		300		nC
Q_{gs}	Gate – Source Charge			50		
Q_{gd}	Gate – Drain Charge			140		
$T_{d(on)}$	Turn-on Delay Time	**Resistive switching @ 25°C** V_{GS} = 15V V_{Bus} = 800V I_D = 14A R_G = 2.2Ω		50		ns
T_r	Rise Time			31		
$T_{d(off)}$	Turn-off Delay Time			170		
T_f	Fall Time			48		

Source - Drain diode ratings and characteristics

Symbol	Characteristic	Test Conditions		Min	Typ	Max	Unit
I_S	Continuous Source current (Body diode)		Tc = 25°C			16	A
			Tc = 80°C			12	
V_{SD}	Diode Forward Voltage	V_{GS} = 0V, I_S = - 14A				1.1	V
dv/dt	Peak Diode Recovery ❶					25	V/ns
t_{rr}	Reverse Recovery Time	I_S = - 14A V_R = 100V di_S/dt = 100A/µs	T_j = 25°C			335	ns
			T_j = 125°C			640	
Q_{rr}	Reverse Recovery Charge		T_j = 25°C		1.72		µC
			T_j = 125°C		4.67		

❶ dv/dt numbers reflect the limitations of the circuit rather than the device itself.
I_S ≤ - 14A di/dt ≤ 1000A/µs V_{DD} ≤ 800V T_j ≤ 125°C

Thermal and package characteristics

Symbol	Characteristic			Min	Typ	Max	Unit
R_{thJC}	Junction to Case Thermal Resistance					0.32	°C/W
V_{ISOL}	RMS Isolation Voltage, any terminal to case t =1 min, I isol<1mA, 50/60Hz			2500			V
T_J	Operating junction temperature range			-40		150	°C
T_{STG}	Storage Temperature Range			-40		125	°C
T_C	Operating Case Temperature			-40		100	°C
Torque	Mounting torque	To heatsink	M4	2.5		4.7	N.m
Wt	Package Weight					80	g

Temperature sensor NTC (see application note APT0406 on www.microsemi.com for more information).

Symbol	Characteristic	Min	Typ	Max	Unit
R_{25}	Resistance @ 25°C		50		kΩ
$B_{25/85}$	T_{25} = 298.15 K		3952		K

$$R_T = \frac{R_{25}}{\exp\left[B_{25/85}\left(\frac{1}{T_{25}} - \frac{1}{T}\right)\right]}$$

T: Thermistor temperature
R_T: Thermistor value at T

SP1 Package outline (dimensions in mm)

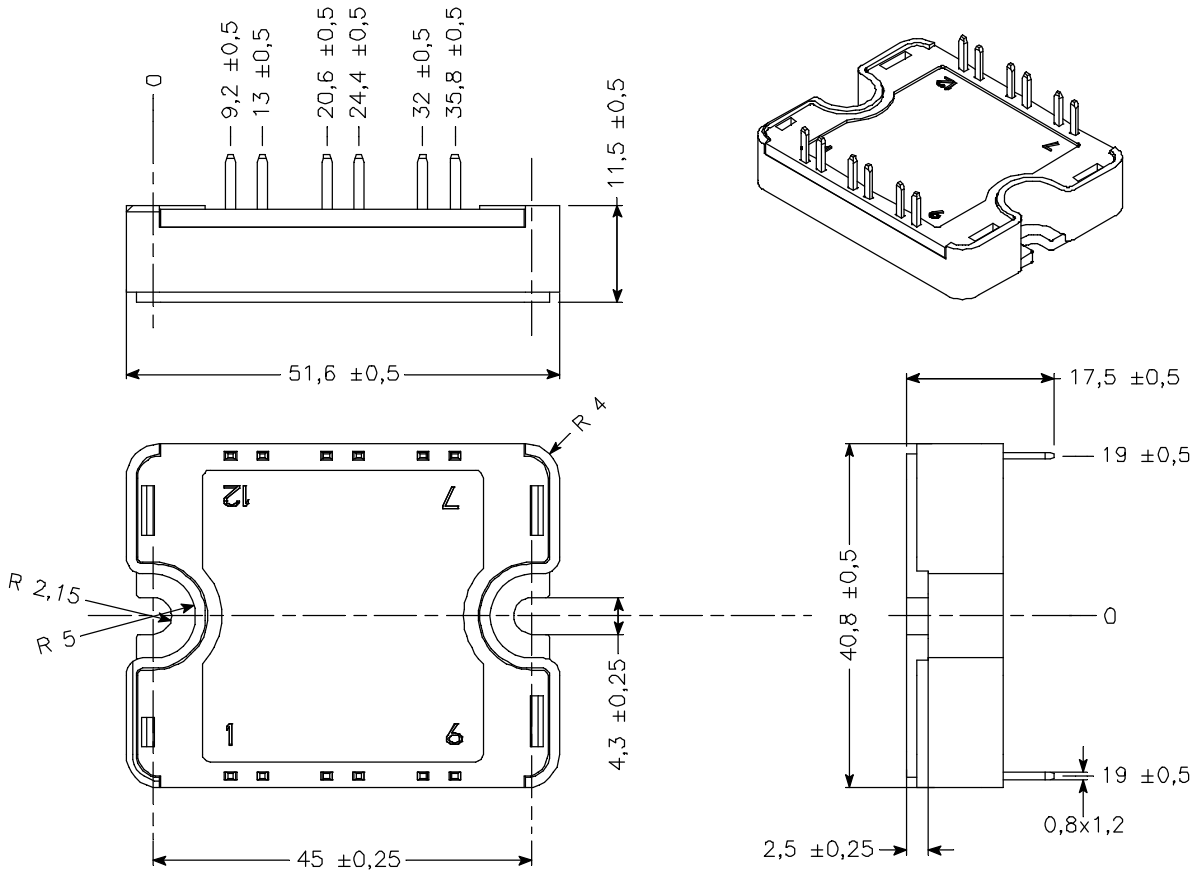

See application note 1904 - Mounting Instructions for SP1 Power Modules on www.microsemi.com

Typical Performance Curve

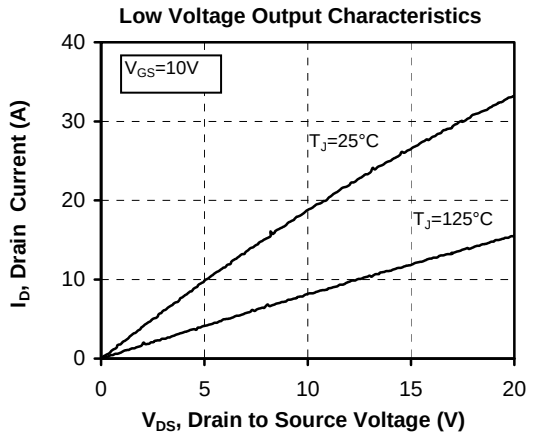

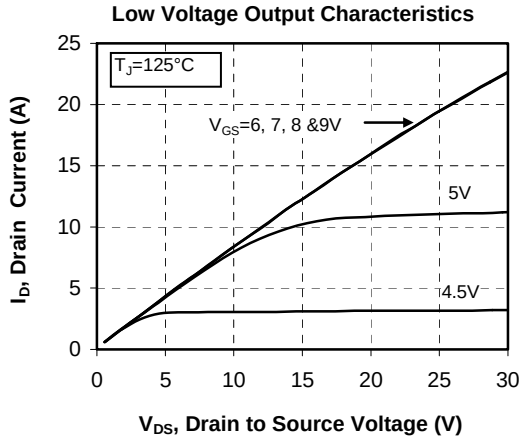

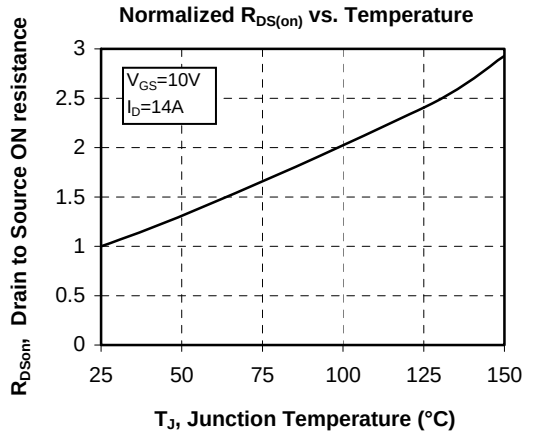

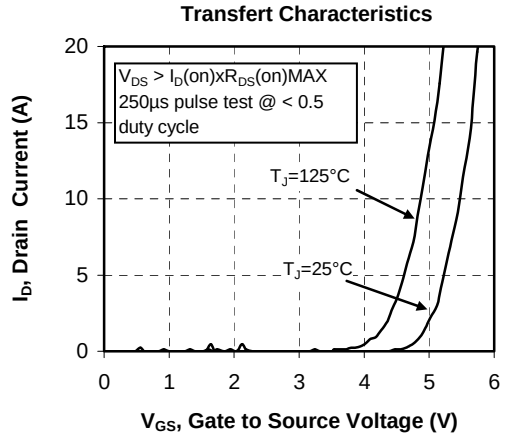

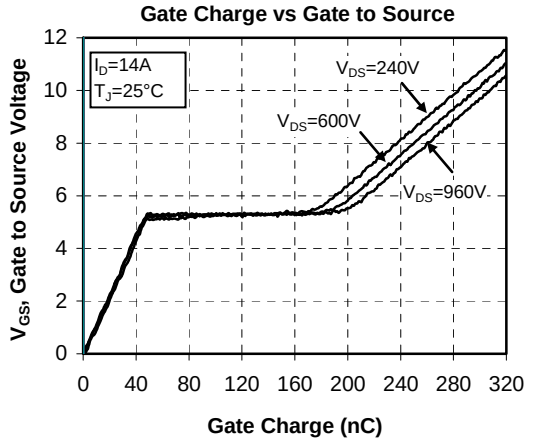

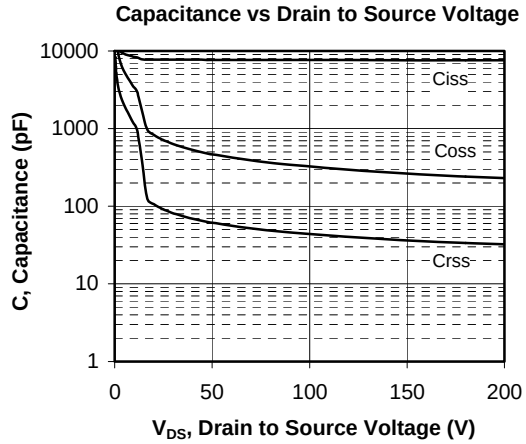

Drain Current vs Source to Drain Voltage

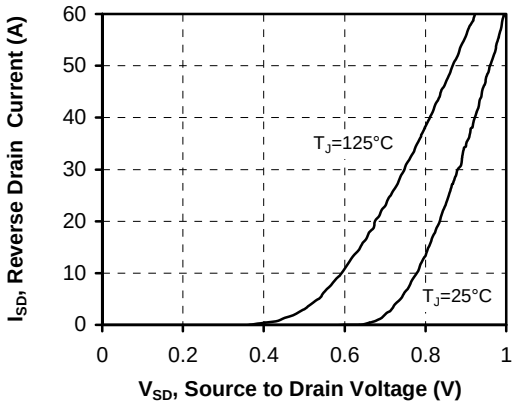

Maximum Effective Transient Thermal Impedance, Junction to Case vs Pulse Duration

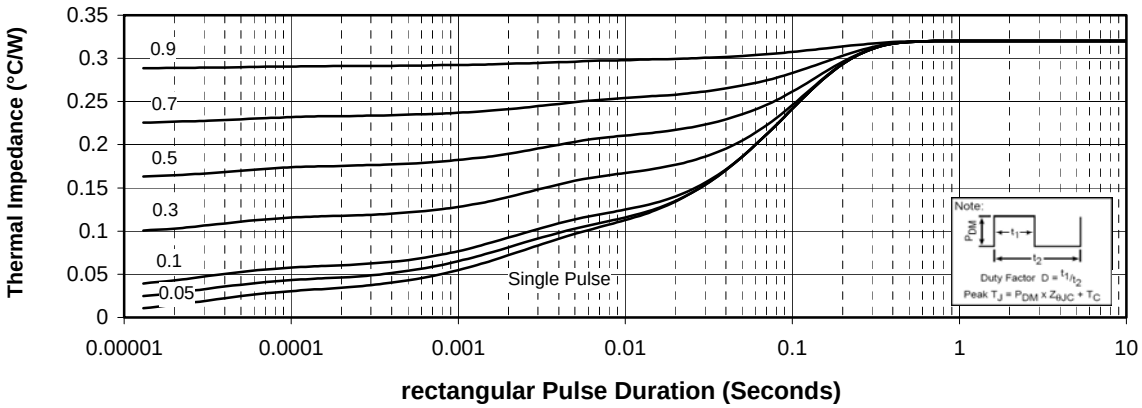

Microsemi reserves the right to change, without notice, the specifications and information contained herein

Microsemi's products are covered by one or more of U.S patents 4,895,810 5,045,903 5,089,434 5,182,234 5,019,522 5,262,336 6,503,786 5,256,583 4,748,103 5,283,202 5,231,474 5,434,095 5,528,058 and foreign patents. U.S and Foreign patents pending. All Rights Reserved.