Rev	AWO #	Description	Date	Appr
-		RELEASED	11/30/10	

APPROVED: _____

DATE: _____ TITLE: _____

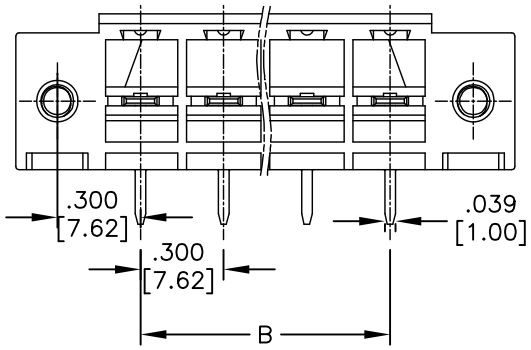

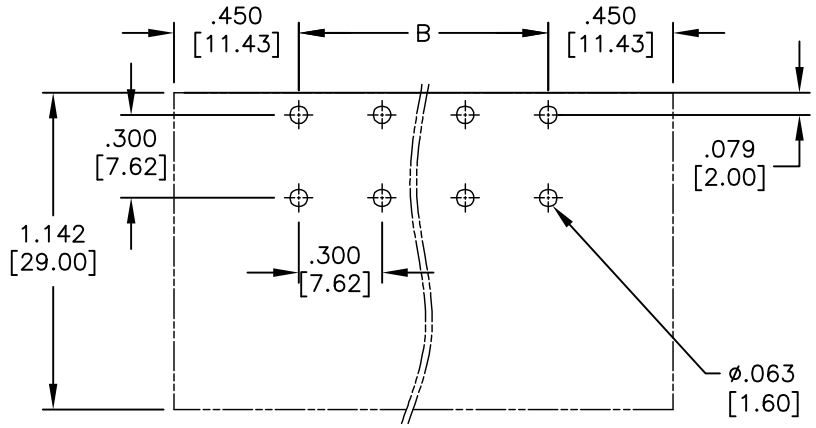

RECOMMENDED PCB LAYOUT

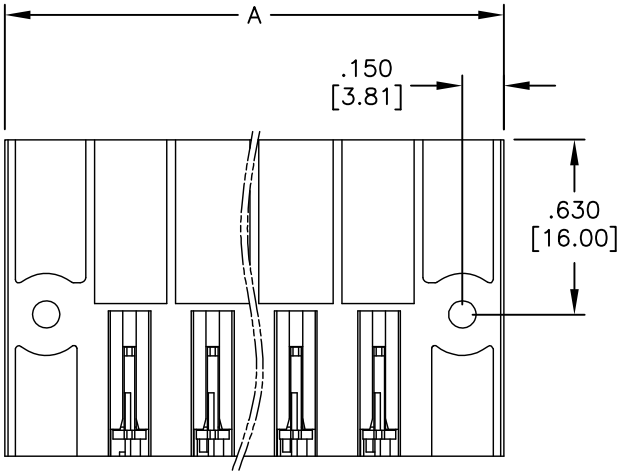

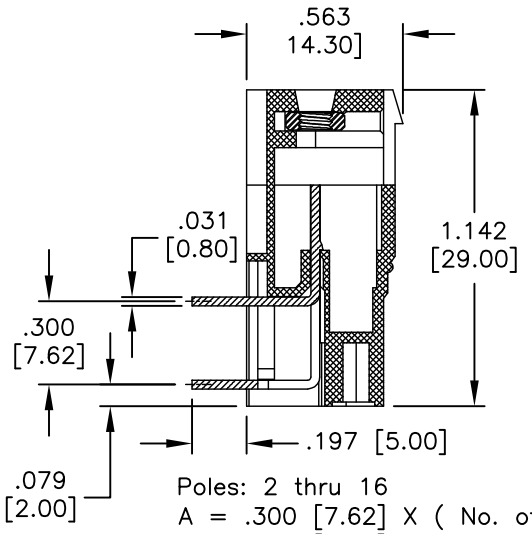

Poles: 2 thru 16
A = .300 [7.62] X (No. of Positions + 2)
B = .300 [7.62] X No. of Spaces

SPECIFICATIONS:
Material:
Insulator: Thermoplastic, rated UL 94V-0
Insulator color: Green
Screw: M3.0, Steel, Zn plated.
Contact: Copper Alloy, Tin plated.
Electrical:
Operation voltage: 300 VAC
Current rating: 32 Amps
Mechanical:
Withstanding Voltage: 1.6KV
Environmental:
Operating temperature: -40°C to +115°C
Lead free, RoHS compliant.
Recommended soldering temp: 235°C for 5 sec.

RoHS COMPLIANT

UNLESS OTHERWISE SPECIFIED
ALL DIMENSIONS ARE MM [INCHES]
TOLERANCES: EXCEPT AS NOTED

INCHES		HOLES	
.X	± .10	Ø.X	±.10
.XX	± .020	Ø.XX	±.015
.XXX	± .015	Ø.XXX	±.010

APPROVALS		DATE
DRAWN	AY	11/30/10
CHECKED	AH	11/30/10
APPROVED		

ADAM TECH
909 Rahway Avenue, Union, NJ 07083
Phone: 908-687-5000 Fax: 908-687-5710

TITLE
EURO BLOCK, PCB, .300 [7.62] PITCH, W/ FLANGE

SIZE	PART NO.	REV.
X	EB43-XX-G-E-NUT	-

REF: S00007T | SCALE: NTS | SHEET 1 OF 1