Dual Common Cathode Ultrafast Plastic Rectifier

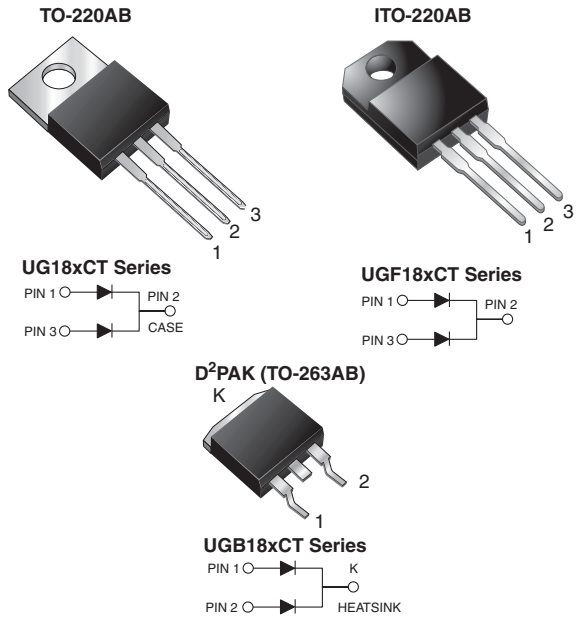

DESIGN SUPPORT TOOLS AVAILABLE

3D Models

FEATURES

- Power pack
- Glass passivated pellet chip junction
- Ultrafast recovery time
- Low switching losses, high efficiency
- Low forward voltage drop
- High forward surge capability
- Meets MSL level 1, per J-STD-020, LF maximum peak of 245 °C (for TO-263AB package)
- Solder dip 275 °C max., 10 s per JESD 22-B106 (for TO-220AB and ITO-220AB package)
- AEC-Q101 qualified available
  - Automotive ordering code: base P/NHE3 (for ITO-220AB and D²PAK (TO-263AB package))
- Material categorization: for definitions of compliance please see www.vishay.com/doc?99912

RoHS COMPLIANT

TYPICAL APPLICATIONS

For use in high frequency rectifier of switching mode power supplies, inverters, freewheeling diodes, DC/DC converters, and other power switching application.

MECHANICAL DATA

Case: TO-220AB, ITO-220AB, D²PAK (TO-263AB)

Molding compound meets UL 94V-0 flammability rating Base P/N-E3 - RoHS-compliant, commercial grade Base P/NHE3_X - RoHS-compliant and AEC-Q101 qualified ("_X" denotes revision code e.g. A, B,....)

Terminals: matte tin plated leads, solderable per J-STD-002 and JESD22-B102
E3 suffix meets JESD 201 class 1A whisker test, HE3 suffix meets JESD 201 class 2 whisker test

Polarity: as marked
Mounting Torque: 10 in-lbs maximum

PRIMARY CHARACTERISTICS	
$I_{F(AV)}$	18 A
V_{RRM}	50 V to 200 V
I_{FSM}	175A
t_{rr}	20 ns
V_F	0.95 V
T_J max.	150 °C
Package	TO-220AB, ITO-220AB, D²PAK (TO-263AB)
Circuit configuration	Common cathode

MAXIMUM RATINGS (T_C = 25 °C unless otherwise noted)

PARAMETER	SYMBOL	UG18ACT	UG18BCT	UG18CCT	UG18DCT	UNIT
Max. repetitive peak reverse voltage	V_{RRM}	50	100	150	200	V
Max. RMS voltage	V_{RMS}	35	70	105	140	V
Max. DC blocking voltage	V_{DC}	50	100	150	200	V
Max. average forward rectified current at T_C = 105 °C	$I_{F(AV)}$	18				A
Peak forward surge current 8.3 ms single half sine-wave superimposed on rated load per diode	I_{FSM}	175				A
Operating junction and storage temperature range	T_J, T_{STG}	-65 to +150				°C
Isolation voltage (ITO-220AB only) from terminal to heatsink t = 1 min	V_{AC}	1500				V

For technical questions within your region: DiodesAmericas@vishay.com, DiodesAsia@vishay.com, DiodesEurope@vishay.com
THIS DOCUMENT IS SUBJECT TO CHANGE WITHOUT NOTICE. THE PRODUCTS DESCRIBED HEREIN AND THIS DOCUMENT ARE SUBJECT TO SPECIFIC DISCLAIMERS, SET FORTH AT www.vishay.com/doc?91000

ELECTRICAL CHARACTERISTICS (T_C = 25 °C unless otherwise noted)								
PARAMETER	**TEST CONDITIONS**		**SYMBOL**	**UG18ACT**	**UG18BCT**	**UG18CCT**	**UG18DCT**	**UNIT**
Max. instantaneous forward voltage per diode [1]	9.0 A	T_J = 100 °C	V_F	1.1				V
	20 A			1.2				
	5.0 A			0.95				
Max. DC reverse current at rated DC blocking voltage per diode		T_A = 25 °C	I_R	10				μA
		T_A = 100 °C		300				
Max. reverse recovery time per diode	I_F = 0.5 A, I_R = 1.0 A, I_{rr} = 0.25 A		t_{rr}	20				ns
Max. reverse recovery time per diode	I_F = 9.0 A, V_R = 30 V, dI/dt = 50 A/μs, I_{rr} = 10 % I_{RM}	T_J = 25 °C	t_{rr}	30				ns
		T_J = 100 °C		50				
Max. stored charge per diode	I_F = 9.0 A, V_R = 30 V, dI/dt = 50 A/μs, I_{rr} = 10 % I_{RM}	T_J = 25 °C	Q_{rr}	20				nC
		T_J = 100 °C		45				
Typical junction capacitance per diode	at 4.0 V, 1 MHz		C_J	30				pF

Notes

[1] Pulse test: 300 μs pulse width, 1 % duty cycle

THERMAL CHARACTERISTICS (T_C = 25 °C unless otherwise noted)					
PARAMETER	**SYMBOL**	**UG18**	**UGF18**	**UGB18**	**UNIT**
Typical thermal resistance from junction to case per diode	$R_{\theta JC}$	4.0	6.0	4.0	°C/W

ORDERING INFORMATION (EXAMPLE)					
PACKAGE	**PREFERRED P/N**	**UNIT WEIGHT (g)**	**PACKAGE CODE**	**BASE QUANTITY**	**DELIVERY MODE**
TO-220AB	UG18DCT-E3/45	1.85	45	50/tube	Tube
ITO-220AB	UGF18DCT-E3/45	2.00	45	50/tube	Tube
TO-263AB	UGB18DCT-E3/45	1.35	45	50/tube	Tube
TO-263AB	UGB18DCT-E3/81	1.35	81	800/reel	Tape and reel
ITO-220AB	UGF18DCTHE3_A/P [1]	2.00	P	50/tube	Tube
TO-263AB	UGB18DCTHE3_A/P [1]	1.35	P	50/tube	Tube
TO-263AB	UGB18DCTHE3_A/I [1]	1.35	I	800/reel	Tape and reel

Note

[1] AEC-Q101 qualified, available in ITO-220AB and TO-263AB package

For technical questions within your region: DiodesAmericas@vishay.com, DiodesAsia@vishay.com, DiodesEurope@vishay.com
THIS DOCUMENT IS SUBJECT TO CHANGE WITHOUT NOTICE. THE PRODUCTS DESCRIBED HEREIN AND THIS DOCUMENT ARE SUBJECT TO SPECIFIC DISCLAIMERS, SET FORTH AT www.vishay.com/doc?91000

RATINGS AND CHARACTERISTICS CURVES (T_A = 25 °C unless otherwise noted)

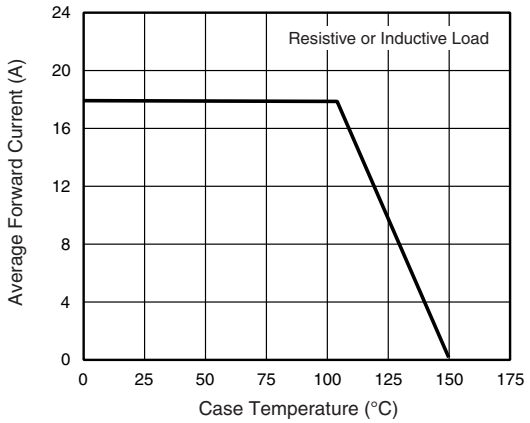

Fig. 1 - Forward Current Derating Curve

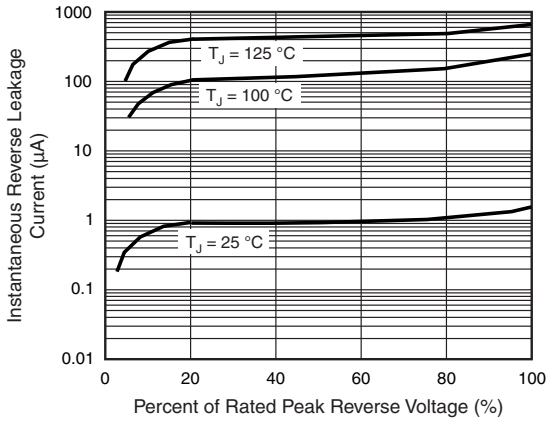

Fig. 4 - Typical Reverse Leakage Characteristics Per Diode

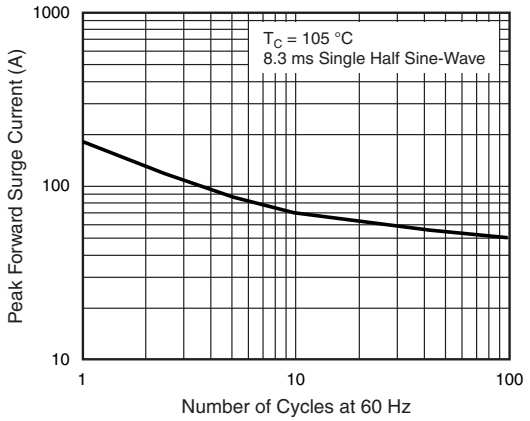

Fig. 2 - Max. Non-Repetitive Peak Forward Surge Current Per Diode

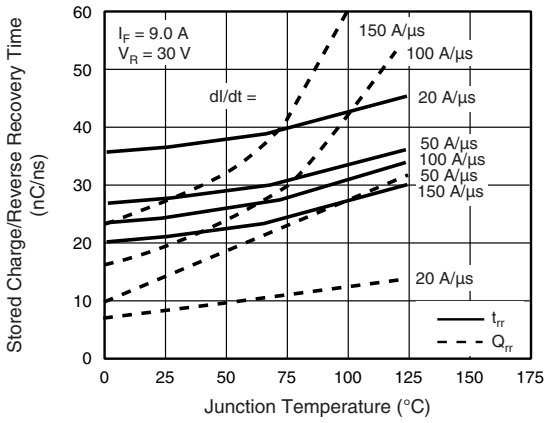

Fig. 5 - Reverse Switching Characteristics Per Diode

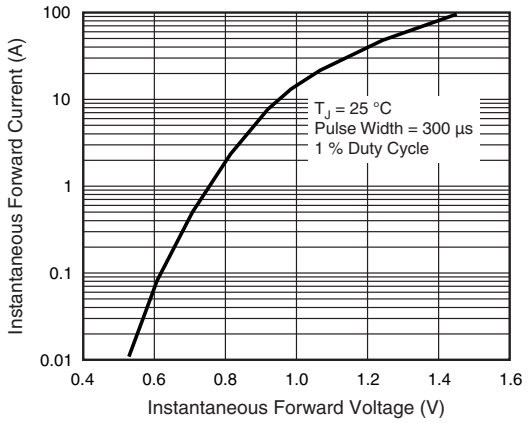

Fig. 3 - Typical Instantaneous Forward Characteristics Per Diode

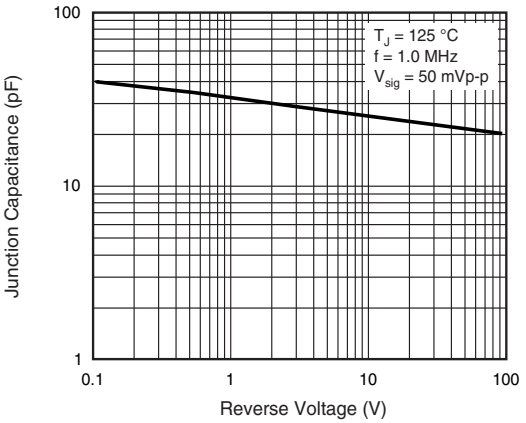

Fig. 6 - Typical Junction Capacitance Per Diode

For technical questions within your region: DiodesAmericas@vishay.com, DiodesAsia@vishay.com, DiodesEurope@vishay.com
THIS DOCUMENT IS SUBJECT TO CHANGE WITHOUT NOTICE. THE PRODUCTS DESCRIBED HEREIN AND THIS DOCUMENT ARE SUBJECT TO SPECIFIC DISCLAIMERS, SET FORTH AT www.vishay.com/doc?91000

PACKAGE OUTLINE DIMENSIONS in inches (millimeters)

TO-220AB

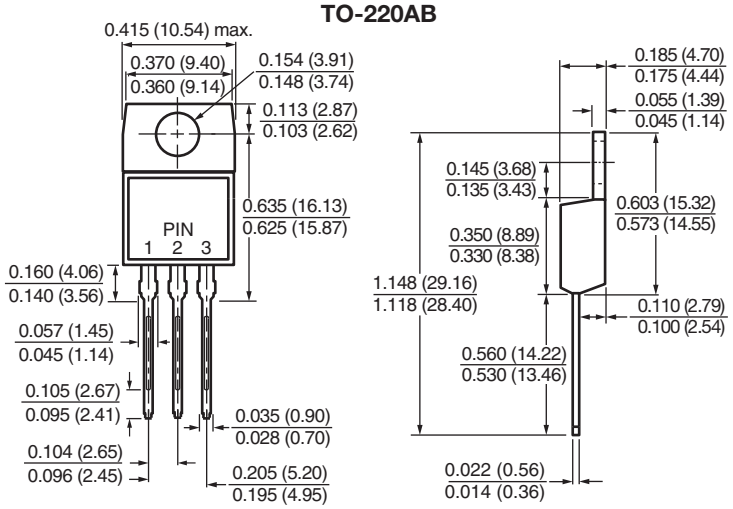

ITO-220AB

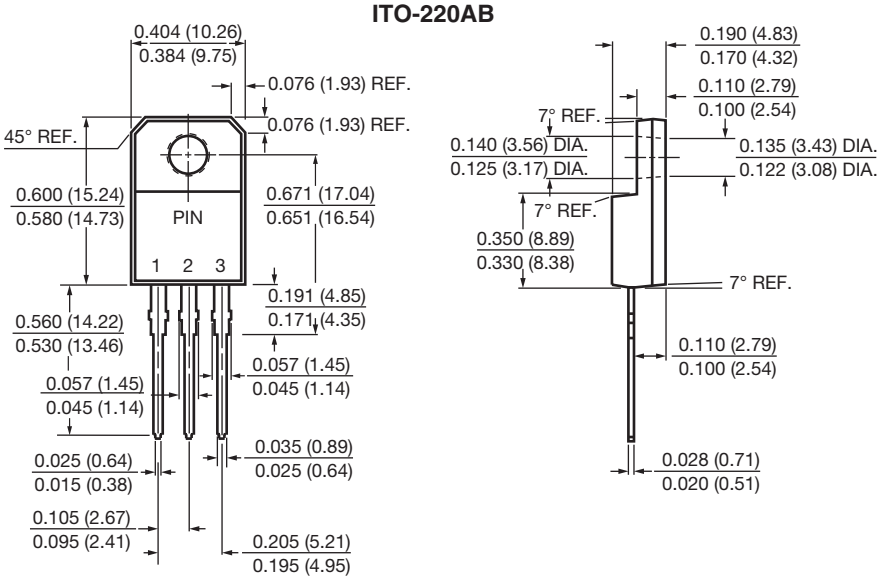

D²PAK (TO-263AB)

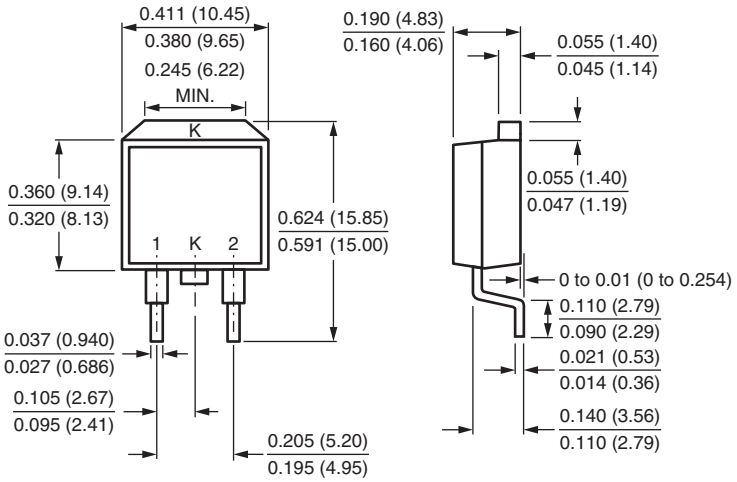

Mounting Pad Layout

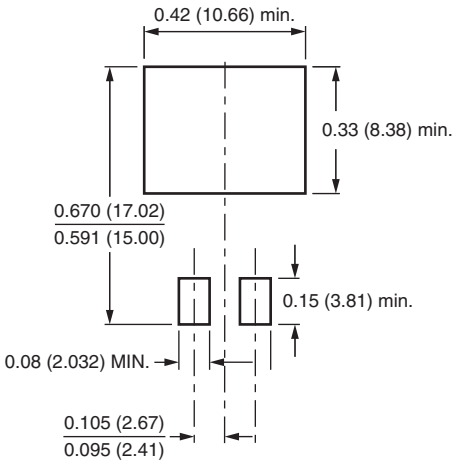

For technical questions within your region: DiodesAmericas@vishay.com, DiodesAsia@vishay.com, DiodesEurope@vishay.com
THIS DOCUMENT IS SUBJECT TO CHANGE WITHOUT NOTICE. THE PRODUCTS DESCRIBED HEREIN AND THIS DOCUMENT ARE SUBJECT TO SPECIFIC DISCLAIMERS, SET FORTH AT www.vishay.com/doc?91000

Disclaimer

ALL PRODUCT, PRODUCT SPECIFICATIONS AND DATA ARE SUBJECT TO CHANGE WITHOUT NOTICE TO IMPROVE RELIABILITY, FUNCTION OR DESIGN OR OTHERWISE.

Vishay Intertechnology, Inc., its affiliates, agents, and employees, and all persons acting on its or their behalf (collectively, “Vishay”), disclaim any and all liability for any errors, inaccuracies or incompleteness contained in any datasheet or in any other disclosure relating to any product.

Vishay makes no warranty, representation or guarantee regarding the suitability of the products for any particular purpose or the continuing production of any product. To the maximum extent permitted by applicable law, Vishay disclaims (i) any and all liability arising out of the application or use of any product, (ii) any and all liability, including without limitation special, consequential or incidental damages, and (iii) any and all implied warranties, including warranties of fitness for particular purpose, non-infringement and merchantability.

Statements regarding the suitability of products for certain types of applications are based on Vishay's knowledge of typical requirements that are often placed on Vishay products in generic applications. Such statements are not binding statements about the suitability of products for a particular application. It is the customer's responsibility to validate that a particular product with the properties described in the product specification is suitable for use in a particular application. Parameters provided in datasheets and / or specifications may vary in different applications and performance may vary over time. All operating parameters, including typical parameters, must be validated for each customer application by the customer's technical experts. Product specifications do not expand or otherwise modify Vishay's terms and conditions of purchase, including but not limited to the warranty expressed therein.

Hyperlinks included in this datasheet may direct users to third-party websites. These links are provided as a convenience and for informational purposes only. Inclusion of these hyperlinks does not constitute an endorsement or an approval by Vishay of any of the products, services or opinions of the corporation, organization or individual associated with the third-party website. Vishay disclaims any and all liability and bears no responsibility for the accuracy, legality or content of the third-party website or for that of subsequent links.

Except as expressly indicated in writing, Vishay products are not designed for use in medical, life-saving, or life-sustaining applications or for any other application in which the failure of the Vishay product could result in personal injury or death. Customers using or selling Vishay products not expressly indicated for use in such applications do so at their own risk. Please contact authorized Vishay personnel to obtain written terms and conditions regarding products designed for such applications.

No license, express or implied, by estoppel or otherwise, to any intellectual property rights is granted by this document or by any conduct of Vishay. Product names and markings noted herein may be trademarks of their respective owners.

© 2022 VISHAY INTERTECHNOLOGY, INC. ALL RIGHTS RESERVED