Standard Products

VRG8684
Voltage Regulator, 3.0 Amp, Positive Low Dropout (LDO), Adjustable Radiation Tolerant

www.aeroflex.com/voltreg

October 2, 2012

FEATURES

- Manufactured using LINEAR TECHNOLOGY Space Qualified RH1084 die
- Radiation performance
  - Total dose: 100 krads(Si), Dose rate = 50 - 300 rads(Si)/s
- Thermal shutdown
- Output voltage adjustable: 1.25V to 23V
- Dropout voltage: 1.80V at 3.0Amps
- 3-Terminal
- Output current: 3.0Amps
- Voltage reference: 1.25V +2%, -3.2%
- Load regulation: 0.35% max
- Line regulation: 0.25% max
- Ripple rejection: >60dB
- Packaging – Hermetic Ceramic
  - SMD-0.5 Surface mount
  - 3 Pads, .400"L x .296"W x .120"Ht
  - Power package
  - Weight - 2 gm max
- Designed for aerospace and high reliability space applications

- **Aeroflex Plainview's Radiation Hardness Assurance Plan is DLA Certified to MIL-PRF-38534, Appendix G.**

DESCRIPTION

The Aeroflex Plainview VRG8684 consists of a Positive Adjustable (RH1084) LDO voltage regulator capable of supplying 3.0Amps over the output voltage range as defined under recommended operating conditions. The VRG8684 offers excellent line and load regulation specifications and ripple rejection.

The VRG8684 serves a wide variety of applications including SCSI-2 Active Terminator, High Efficiency Linear Regulators, Post Regulators for Switching Supplies, Constant Current Regulators, Battery Chargers and Microprocessor Supply.

The VRG8684 has been specifically designed to meet exposure to radiation environments and is configured for a SMD-0.5 SMT power package. It is guaranteed operational from -55°C to +125°C. Available screened in accordance with MIL-PRF-38534, the VRG8684 is ideal for demanding military and space applications.

Dropout (V_{IN} - V_{OUT}) decreases at lower load currents.

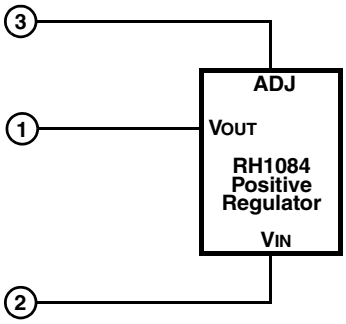

FIGURE 1 – BLOCK DIAGRAM / SCHEMATIC

ABSOLUTE MAXIMUM RATINGS

Parameter	Rating	Units
Lead temperature (soldering 10 Sec)	300	°C
Input Output Differential	25	VDC
Load Current, maximum	6.0	A
ESD (MIL-STD-883, M3015, Class 2)	2000 to 3999	V
Operating Junction Temperature Range	-55 to +150	°C
Storage Temperature Range	-65 to +150	°C
Thermal Resistance (Junction to Case) Θ_{JC}	2	°C/W

NOTICE: Stresses above those listed under "Absolute Maximum Ratings" may cause permanent damage to the device. These are stress rating only; functional operation beyond the "Operation Conditions" is not recommended and extended exposure beyond the "Operation Conditions" may effect device reliability.

RECOMMENDED OPERATING CONDITIONS

Parameter	Range	Units
Output Voltage Range	1.25 to 23	VDC
Input Output Differential	1.8 to 24	VDC
Case Operating Temperature Range	-55 to +125	°C

ELECTRICAL PERFORMANCE CHARACTERISTICS 1/

UNLESS OTHERWISE SPECIFIED: $-55°C \leq T_C \leq +125°C$

Parameter	Symbol	Conditions ($P \leq P_{MAX}$)	Min	Max	Units
Reference Voltage 3/, 2/	V_{REF}	$1.5V \leq (V_{IN} - V_{OUT}) \leq 15V$, $10mA \leq I_{OUT} \leq 3.0A$	1.210	1.275	V
Dropout Voltage 2/	V_{DROP1}	$\Delta V_{REF} = 1\%$, $I_{OUT} = 5.0A$	-	1.8	V
Dropout Voltage 2/	V_{DROP2}	$\Delta V_{REF} = 1\%$, $I_{OUT} = 3.0A$		1.4	V
Line Regulation 3/, 2/	$\frac{\Delta V_{OUT}}{\Delta V_{IN}}$	$I_{LOAD} = 10mA$, $1.5V \leq (V_{IN} - V_{OUT}) \leq 15V$	-	0.5	%
Load Regulation 3/, 2/	$\frac{\Delta V_{OUT}}{\Delta I_{OUT}}$	$10mA \leq I_{OUT} \leq 3.0A$, $(V_{IN} - V_{OUT}) = 3V$	-	0.35	%
Adjust Pin Current 2/			-	120	µA
Adjust Pin Current Change 2/		$10\ mA \leq I_{OUT} \leq 3.0A$, $1.5V \leq (V_{IN} - V_{OUT}) \leq 15V$	-	5	µA
Minimum Load Current 4/, 2/	I_{MIN}	$(V_{IN} - V_{OUT}) = 25V$	-	10	mA
Current Limit 2/	I_{CL}	$(V_{IN} - V_{OUT}) = 5V$	5.25		A
Ripple Rejection 3/		$I_{OUT} = 3.0A$, $(V_{IN} - V_{OUT}) = 3V$, f = 120Hz, $C_{ADJ} = C_{OUT} = 25\mu F$	60	-	dB
Thermal Regulation		30ms pulse, $T_C = +25°C$	-	0.04	%/W
V_{REF} Long-Term Stability 4/		Burn In: $T_C = +125°C$ @ 1000hrs minimum, Tested at +25°C.	-	1.0	%

Notes:

1/ The manufacturer's output current rating for the RH1084MK positive regulator integrated circuit is 5.0 Amps. For Compliance with the Current Density specifictation of MIL-STD-883 Rev. C, the electrical performance characteristics are specified at an output current of 3.0 Amps.

2/ Specification derated to reflect total dose exposure to 100krads (Si) at +25°C.

3/ Line and load regulation are guaranteed up to the maximum power dissipation of 15W. Power dissipation is determined by the input/output differential voltage and the output current. Guaranteed maximum power dissipation will not be available over the full input/output voltage range.

4/ Not tested. Shall be guaranteed by design, characterization, or correlation to other tested parameters.

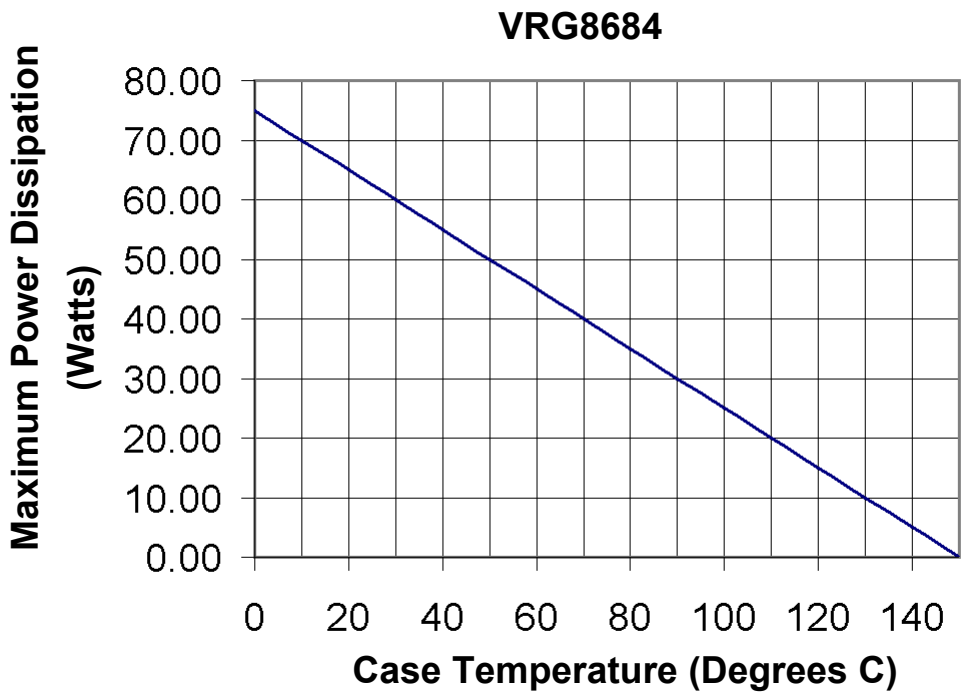

FIGURE 2 – MAXIMUM POWER vs CASE TEMPERATURE

The maximum Power dissipation is limited by the thermal shutdown function of the regulator chip in the VRG8684. The graph above represents the achievable power before the chip shuts down. The line in the graph represents the maximum power dissipation of the VRG8684 This graph is based on the maximum junction temperature of 150°C and a thermal resistance (Θ_{JC}) of 2°C/W.

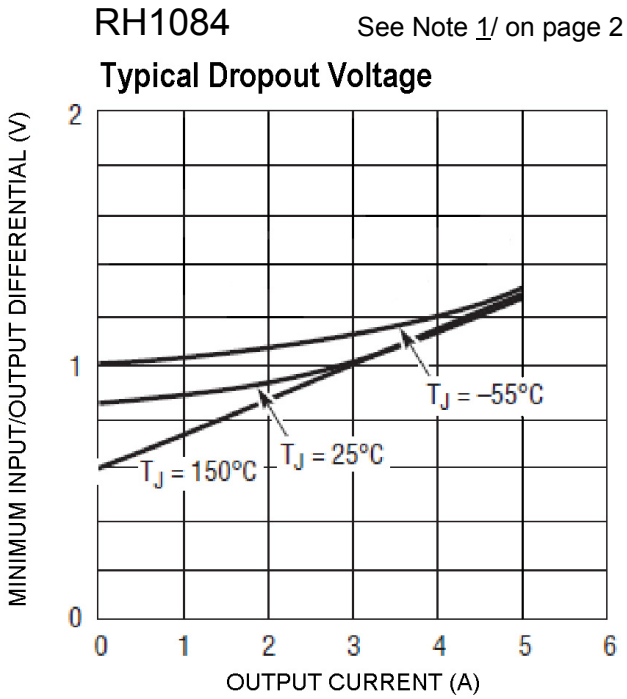

FIGURE 3 – RH1084 DROPOUT VOLTAGE CURVE

RH1084 See Note 1/ on page 2

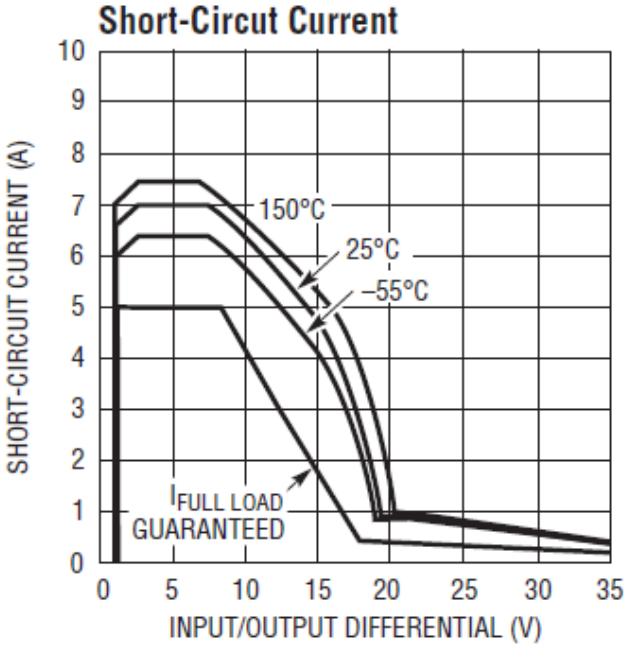

FIGURE 4 – RH1084 SHORT CIRCUIT CURRENT

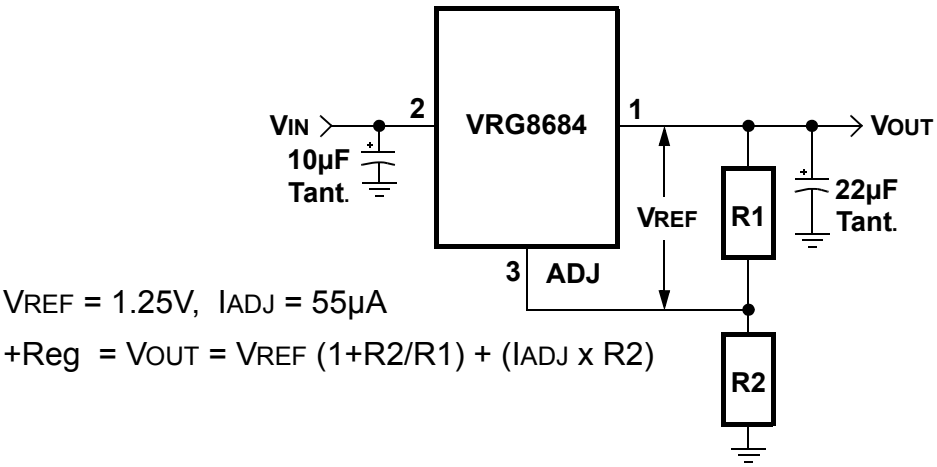

FIGURE 5 – BASIC RH1084 ADJUSTABLE REGULATOR APPLICATION

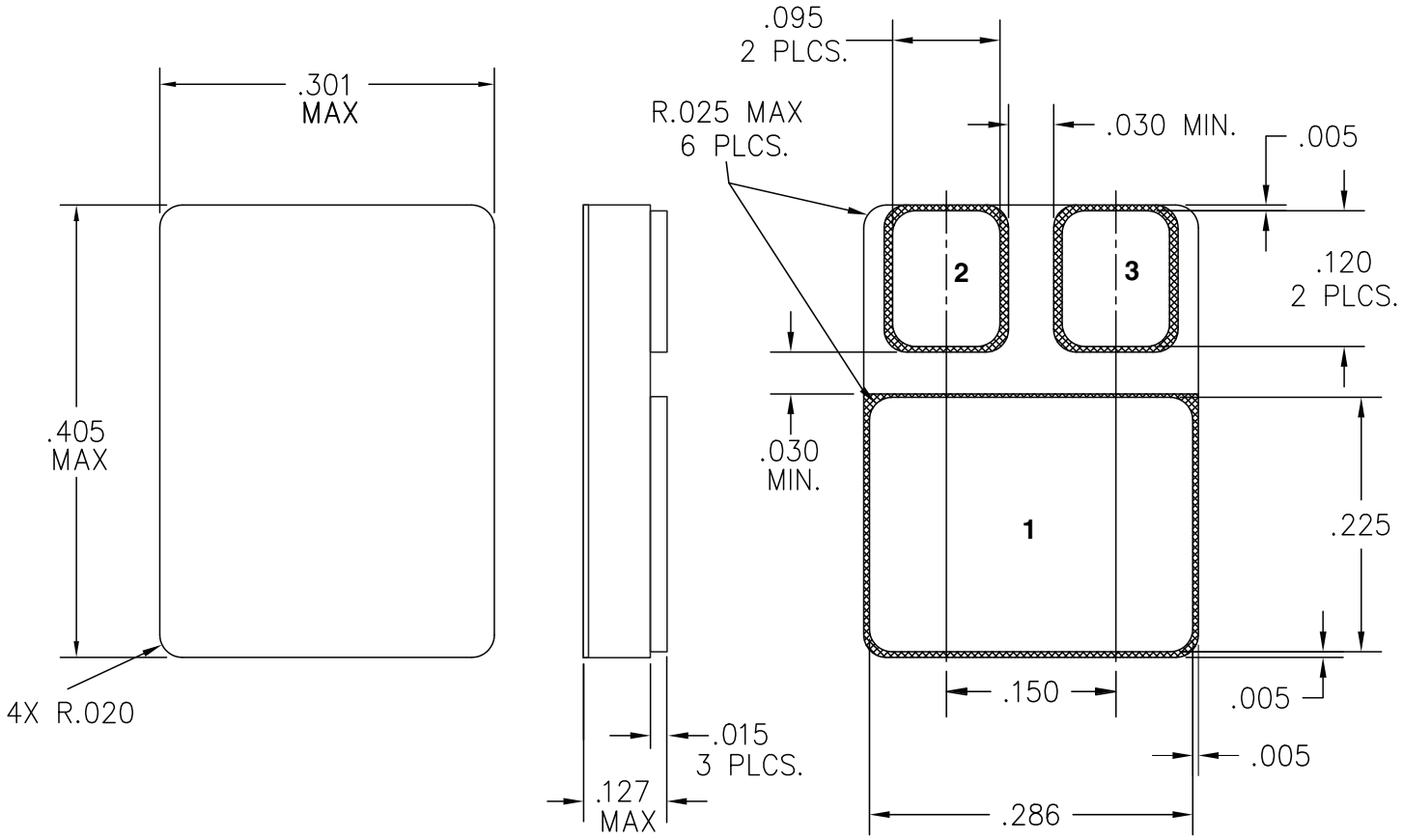

NOTE: Package & Lid are electrically isolated from signal pads.

FIGURE 6 – VRG8684 PACKAGE OUTLINE — SURFACE MOUNT

ORDERING INFORMATION

Model	DLA SMD #	Screening	Package
VRG8684-7	-	Commercial Flow, +25°C testing only	SMD-0.5 Power Pkg
VRG8684-S	-	Military Temperature, -55°C to +125°C Screened in accordance with the individual Test Methods of MIL-STD-883 for Space Applications	
VRG8684-201-1S	5962-0924501KXC	In accordance with DLA SMD	
VRG8684-201-2S	5962-0924501KXA		
VRG8684-901-1S	5962R0924501KXC	In accordance with DLA Certified RHA Program Plan to RHA Level "R", 100krads(Si)	
VRG8684-901-2S	5962R0924501KXA		

For detailed performance characteristic curves, applications information and typical applications see the latest LINEAR TECHNOLOGY datasheet for their RH1084, which is available on-line at www.linear.com.

EXPORT CONTROL:

This product is controlled for export under the International Traffic in Arms Regulations (ITAR). A license from the U.S. Department of State is required prior to the export of this product from the United States.

EXPORT WARNING:

Aeroflex's military and space products are controlled for export under the International Traffic in Arms Regulations (ITAR) and may not be sold or proposed or offered for sale to certain countries. (See ITAR 126.1 for complete information.)

PLAINVIEW, NEW YORK
Toll Free: 800-THE-1553
Fax: 516-694-6715

INTERNATIONAL
Tel: 805-778-9229
Fax: 805-778-1980

NORTHEAST
Tel: 603-888-3975
Fax: 603-888-4585

SE AND MID-ATLANTIC
Tel: 321-951-4164
Fax: 321-951-4254

WEST COAST
Tel: 949-362-2260
Fax: 949-362-2266

CENTRAL
Tel: 719-594-8017
Fax: 719-594-8468

www.aeroflex.com info-ams@aeroflex.com

AEROFLEX
A passion for performance.

Aeroflex Microelectronic Solutions reserves the right to change at any time without notice the specifications, design, function, or form of its products described herein. All parameters must be validated for each customer's application by engineering. No liability is assumed as a result of use of this product. No patent licenses are implied.

Our passion for performance is defined by three attributes represented by these three icons: solution-minded, performance-driven and customer-focused

LT, LTC, LINEAR TECHNOLOGY, Linear Technology and the Linear logo are registered trademarks and RH1084 is copyright Linear Technology Corporation.

SCD8684 Rev C 10/2/12