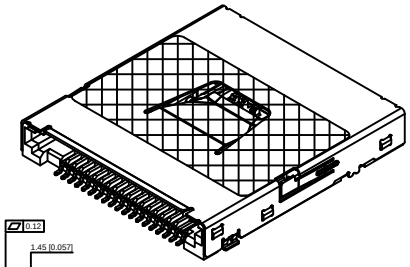

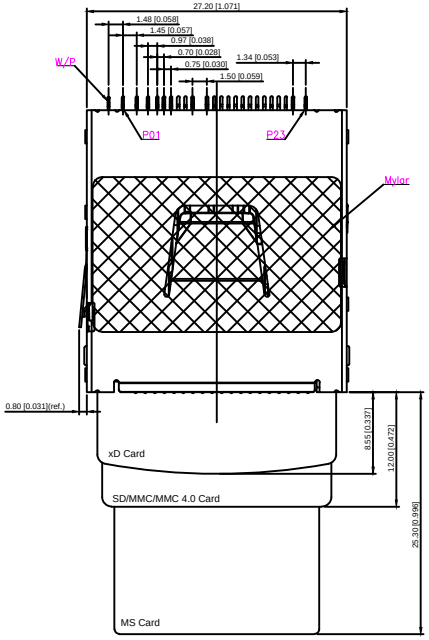

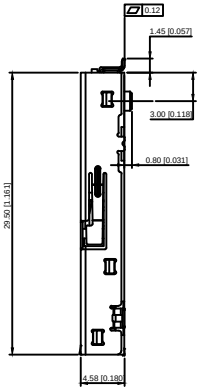

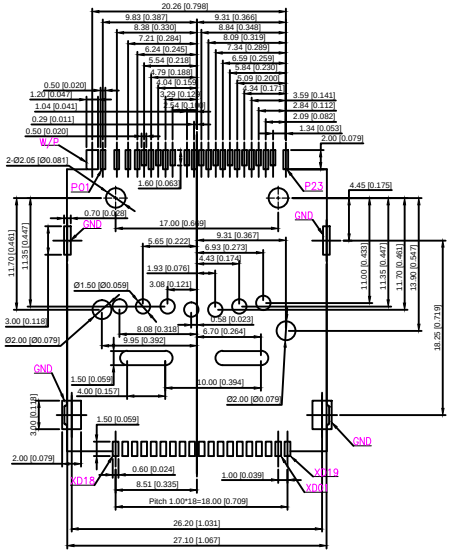

RECOMMEENDED PCB LAYOUT

TOLERANCE UNLESS OTHERWISE ±0.05

XKB Connectivity

- PAD AREA
- NO COPPER AREA
- CONN. OUTLINE

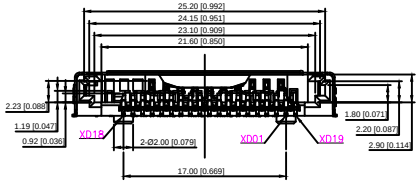

Without SD Card	With SD Card (WP lock)	With SD Card (WP unlock)
W/P GND	W/P GND	W/P GND

XKB Connectivity

SD/MMC/MMC 4.0/MS Pin Assignment

	SD		MMC		MMC 4.0		MS	
PIN No.	Name	Description	Name	Description	Name	Description	Name	Function
W/P	Write Protect							
P01	DAT1	Data Line [Bit 1]			DAT1	Data		
P02	DAT0	Data Line [Bit 0]	DAT	Data	DAT0	Data		
P03					DAT7	Data		
P04	VSS2	Support Voltage Groung	VSS2	Support Voltage Groung	VSS2	Support Voltage Groung		
P05							VSS	VSS
P06					DAT6	Data		
P07							BS	Serial protocol bus state signal
P08	CLK	Clock	CLK	Clock	CLK	Clock		
P09							VCC	VCC
P10							SDIO	Serial protocol data signal
P11	VDD	Support Voltage	VDD	Support Voltage	VDD	Support Voltage		
P12							Reserved	Reserved
P13	VSS1	Support Voltage Groung	VSS1	Support Voltage Groung	VSS1	Support Voltage Groung		
P14							INS	Stick insertion/extraction detect-terminal
P15					DAT5	Data		
P16							Reserved	Reserved
P17	CMD	Command/Response	CMD	Command/Response	CMD	Command/Response		
P18							SCLK	Serial protocol clock signal
P19					DAT4	Data		
P20							VCC	VCC
P21	CD/DAT3	Card Detect/Data Line [Bit 3]	RSV	Reserved for future use	DAT3	Data		
P22							VSS	VSS
P23	DAT2	Data Line [Bit 2]			DAT2	Data		

XKB Connectivity

Note:

1.材料 Material:
  1-1.塑料 Plastic:LCP，S475，Black，UL94V-0
  1-2.触点 Contact:C5210-H
  1-3.外壳 Shell:SUS304-H
2.电镀 Plating:
  2-1.触点 Contact:
    接触面 Contact Area:Au 1u"min.Plating
      Over Ni 50u"min.
    焊尾 Soldertail:Matte Tin 100u"min.Plating
      Over Ni 50u"min.
  2-2. 外壳 Shell:
    50u"Ni Plating Overall
    Soldertail:1u"Gold Plating Over Ni 50u" min.
3.Contact And Tail Coplanarity To Be 0.12mm max.

XKB Connectivity

xD Pin Assignment

PIN No.	FUNCTION
XD01	CARD DETECT
XD02	READY / BUSY
XD03	READ ENABLE
XD04	CARD ENABLE
XD05	COMMAND LATCH ENABLE
XD06	ADDRESS LATCH ENABLE
XD07	WRITE ENABLE
XD08	WRITE PROTECT
XD09	GND
XD10	DATA0
XD11	DATA1
XD12	DATA2
XD13	DATA3
XD14	DATA4
XD15	DATA5
XD16	DATA6
XD17	DATA7
XD18	VCC
XD19	GND

					ANGLAR	±5°
ΔX					L≤4	±0.2
ΔX					4<L≤16	±0.3
ΔX					16<L≤63	±0.4
MARK	DESCRIPTION	DATE	REVISED	APPROVED	L>63	±0.5
REVISIONS					UNSPECIFIED TOLERANCES	

www.xk-dg.cn www.helloxkb.com www.helloxkb.cn

DSND		DATE		SCALE: N/A	MODEL TYPE: SD5in1 CARD CONN
DWN		DATE		VIEW:	PART NO.:
CHKD		DATE		UNIT: mm/in	DWG NO.: XKSD-1251-5C1
APPD		DATE		SIZE: A4	

XKB INDUSTRIAL PRECISION CO.,LIMITED

WEIGHT	SHEET	REVISION
1.0g	1/1	A0