Features

- 200V/100A,
  $R_{DS\,(ON)}$ =26mΩ(Typ.)@V_{GS}=10V
- Low On-Resistance
- Fast Switching
- 100% Avalanche Tested
- 175°C Operating Temperature
- Lead Free and Green Devices Available (RoHS Compliant)

Applications

- Switching Application

Pin Description

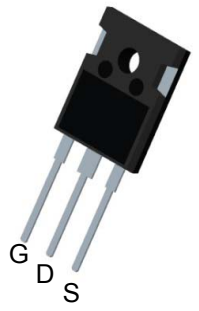

TO247

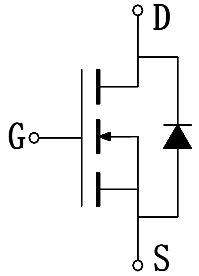

N-Channel MOSFET

Absolute Maximum Ratings

Symbol	Parameter		Rating	Unit
Common Ratings (T_C=25°C Unless Otherwise Noted)				
V_{DSS}	Drain-Source Voltage		200	V
V_{GSS}	Gate-Source Voltage		±25	
T_J	Maximum Junction Temperature		175	°C
T_{STG}	Storage Temperature Range		-55 to 175	°C
I_S	Diode Continuous Forward Current	T_C=25°C	100	A
Mounted on Large Heat Sink				
I_{DP} ①	300μs Pulse Drain Current Tested	T_C=25°C	400	A
I_D ②	Continuous Drain Current(V_{GS}=10V)	T_C=25°C	100	A
		T_C=100°C	71	
P_D	Maximum Power Dissipation	T_C=25°C	417	W
		T_C=100°C	208	
$R_{\theta JC}$	Thermal Resistance-Junction to Case		0.36	°C/W
$R_{\theta JA}$	Thermal Resistance-Junction to Ambient		50	°C/W
Drain-Source Avalanche Ratings				
E_{AS} ③	Avalanche Energy, Single Pulsed		144	mJ

Electrical Characteristics (T_C=25°C Unless Otherwise Noted)

Symbol	Parameter	Test Condition	RU2H100Q			Unit
			Min.	Typ.	Max.	
Static Characteristics						
BV_{DSS}	Drain-Source Breakdown Voltage	V_{GS}=0V, I_{DS}=250μA	200			V
I_{DSS}	Zero Gate Voltage Drain Current	V_{DS}=200V, V_{GS}=0V			1	μA
		T_J=125°C			30	
$V_{GS(th)}$	Gate Threshold Voltage	V_{DS}=V_{GS}, I_{DS}=250μA	2		4	V
I_{GSS}	Gate Leakage Current	V_{GS}=±25V, V_{DS}=0V			±100	nA
$R_{DS(ON)}$ ④	Drain-Source On-state Resistance	V_{GS}=10V, I_{DS}=50A		26	30	mΩ
Diode Characteristics						
V_{SD} ④	Diode Forward Voltage	I_{SD}=50A, V_{GS}=0V			1.2	V
t_{rr}	Reverse Recovery Time	I_{SD}=50A, dI_{SD}/dt=100A/μs		78		ns
Q_{rr}	Reverse Recovery Charge			210		nC
Dynamic Characteristics ⑤						
R_G	Gate Resistance	V_{GS}=0V,V_{DS}=0V,F=1MHz		1.5		Ω
C_{iss}	Input Capacitance	V_{GS}=0V, V_{DS}=100V, Frequency=1.0MHz		8100		pF
C_{oss}	Output Capacitance			1050		
C_{rss}	Reverse Transfer Capacitance			455		
$t_{d(ON)}$	Turn-on Delay Time	V_{DD}=100V,I_{DS}=50A, V_{GEN}=10V,R_G=6Ω		37		ns
t_r	Turn-on Rise Time			165		
$t_{d(OFF)}$	Turn-off Delay Time			151		
t_f	Turn-off Fall Time			62		
Gate Charge Characteristics ⑤						
Q_g	Total Gate Charge	V_{DS}=160V, V_{GS}=10V, I_{DS}=50A		245		nC
Q_{gs}	Gate-Source Charge			24		
Q_{gd}	Gate-Drain Charge			168		

Notes:

①Pulse width limited by safe operating area.

②Calculated continuous current based on maximum allowable junction temperature. The package limitation current is 90A.

③Limited by T_{Jmax}, I_{AS} =24A, V_{DD} = 48V, R_G = 50Ω , Starting T_J = 25°C.

④Pulse test;Pulse width≤300μs, duty cycle≤2%.

⑤Guaranteed by design, not subject to production testing.

Ordering and Marking Information

Device	Marking	Package	Packaging	Quantity	Reel Size	Tape width
RU2H100Q	RU2H100Q	TO247	Tube	30	-	-

Typical Characteristics

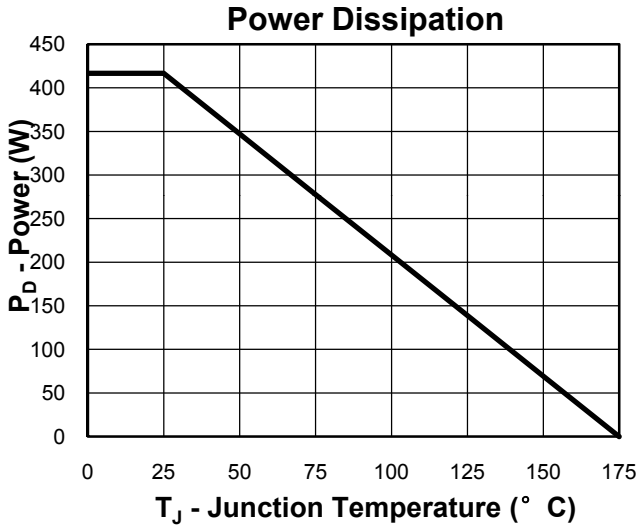

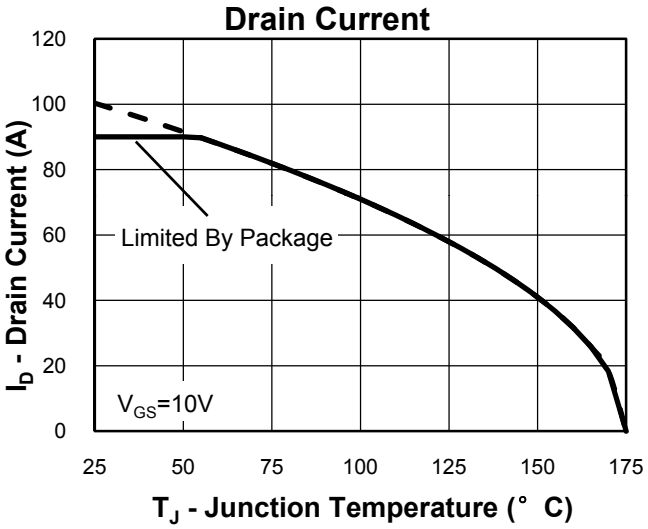

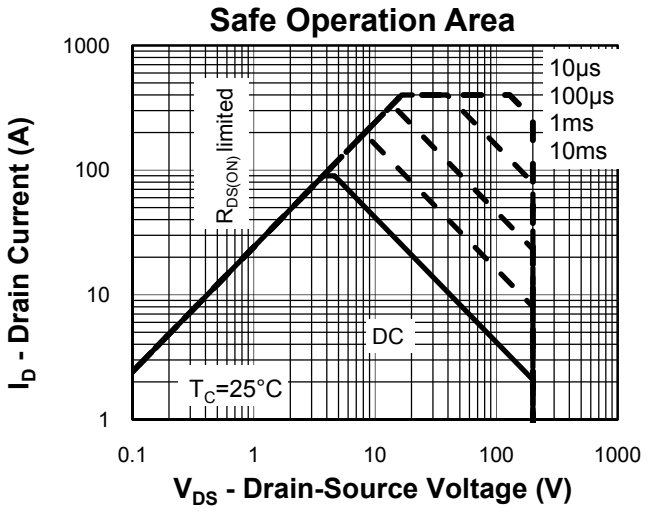

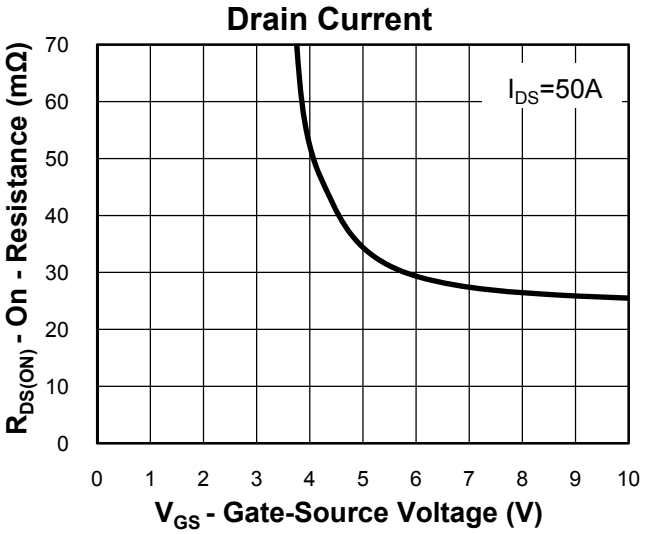

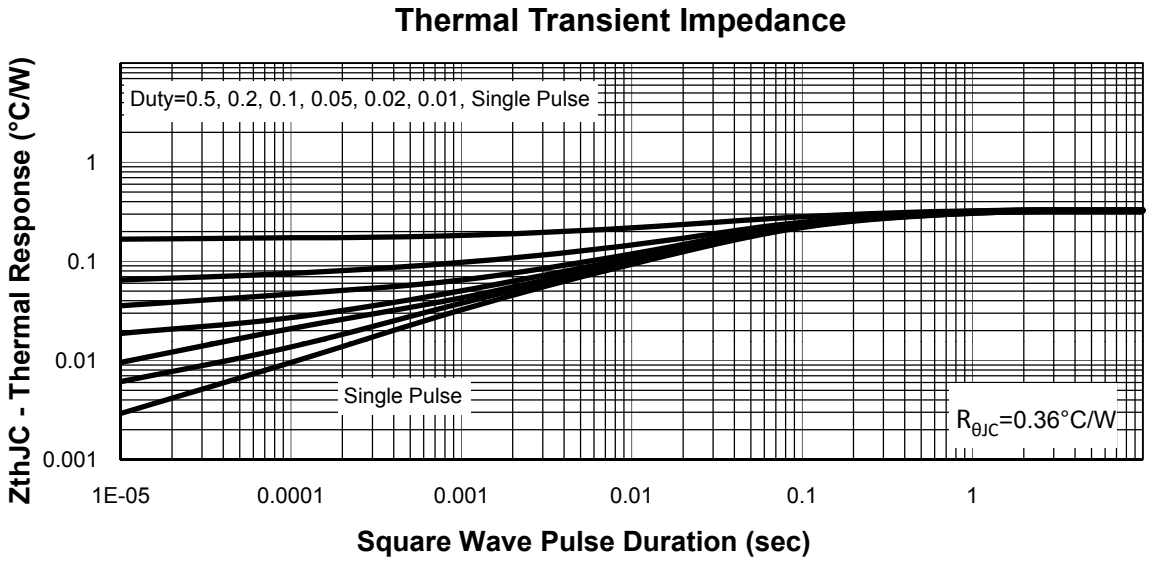

Typical Characteristics

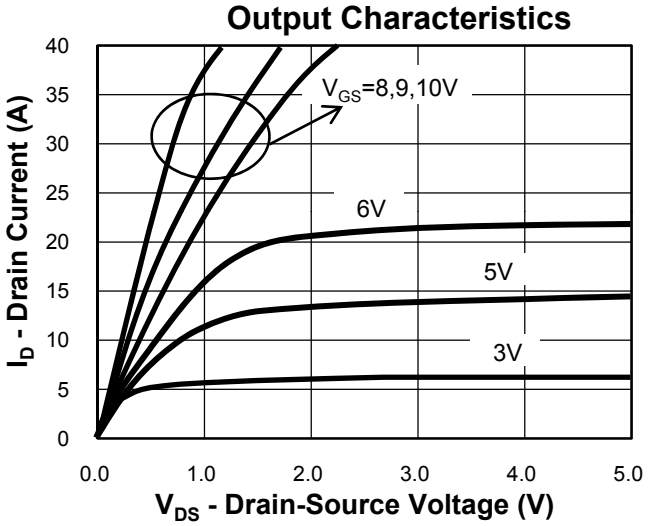

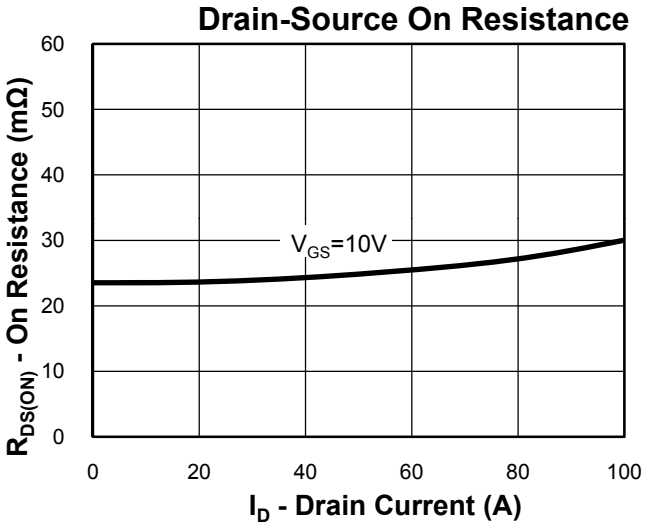

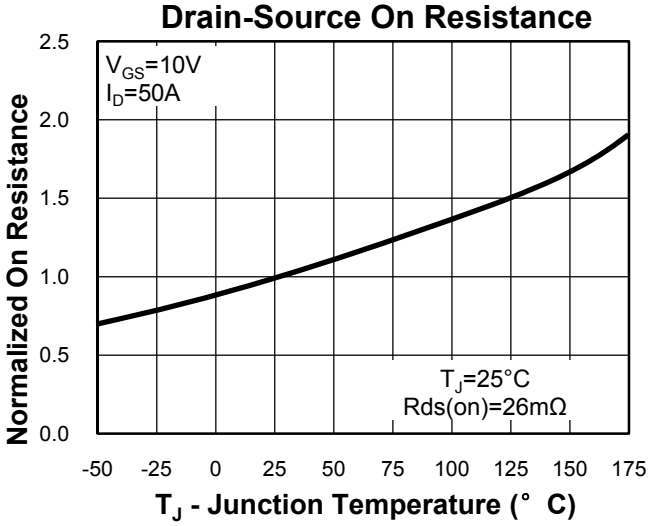

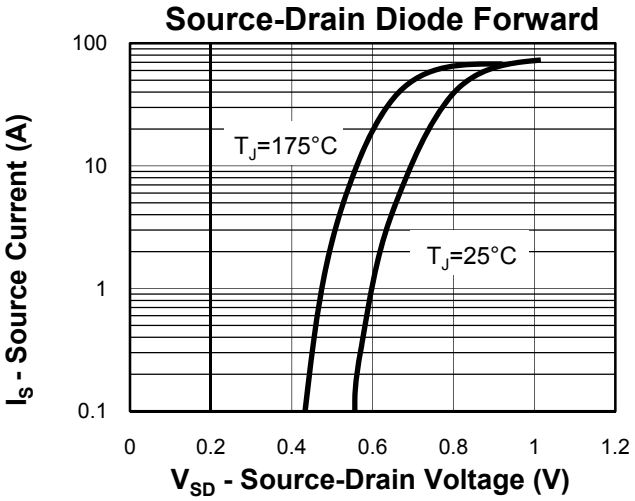

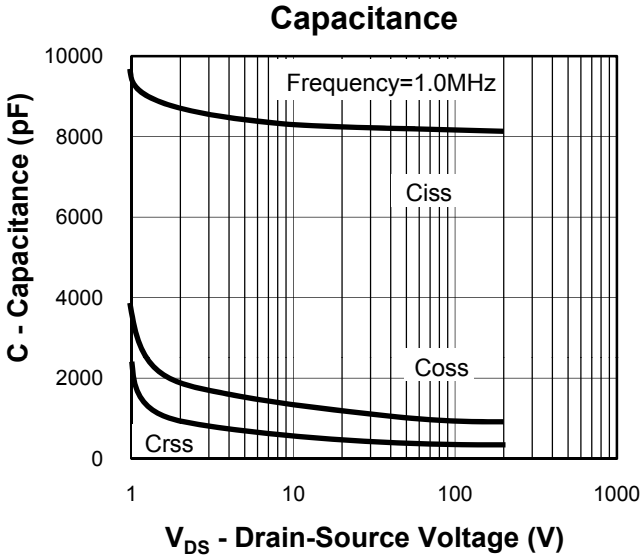

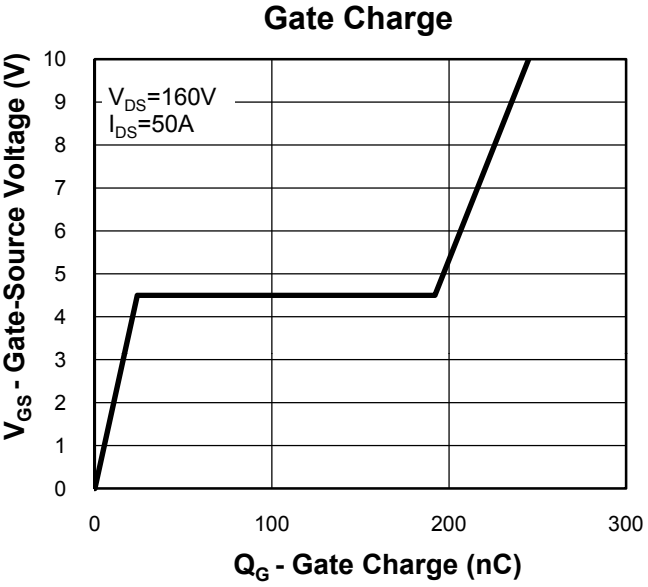

Avalanche Test Circuit and Waveforms

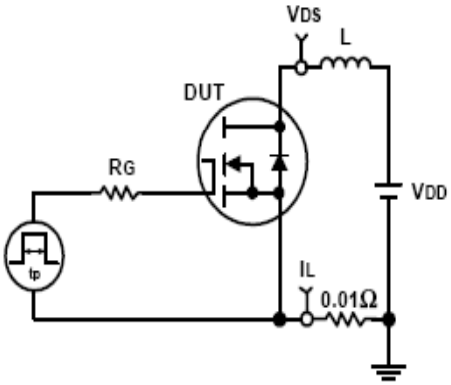

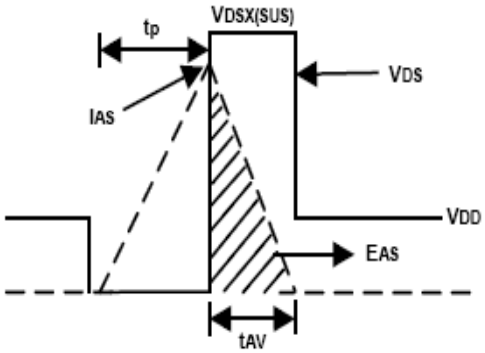

Switching Time Test Circuit and Waveforms

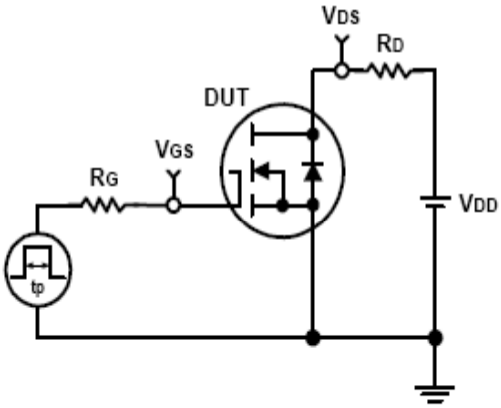

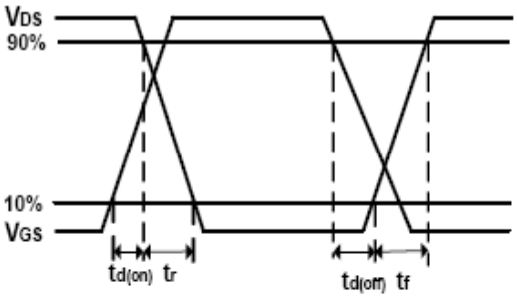

Package Information

TO247

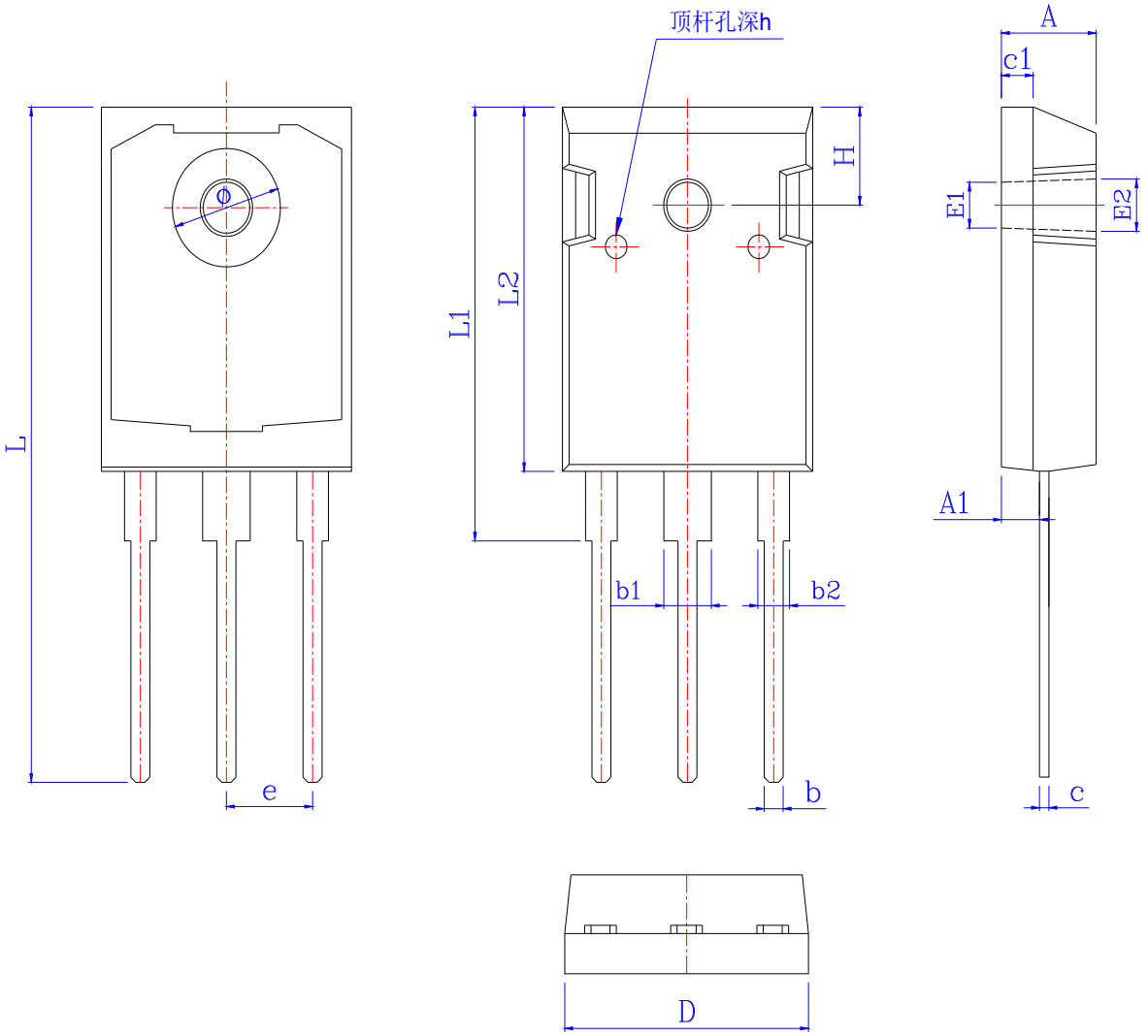

SYMBOL	MM			INCH		
	MIN	NOM	MAX	MIN	NOM	MAX
A	4.850	5.000	5.150	0.191	0.197	0.203
A1	2.200	2.400	2.600	0.087	0.094	0.102
b	1.000	1.200	1.400	0.039	0.047	0.055
b1	2.800	3.000	3.200	0.110	0.118	0.126
b2	1.800	2.000	2.200	0.071	0.079	0.087
c	0.500	0.600	0.700	0.020	0.024	0.028
c1	1.900	2.000	2.100	0.075	0.079	0.083
D	15.450	15.60	15.900	0.608	0.614	0.626
E1	3.500REF			0.138REF		
E2	3.600REF			0.142REF		
L	40.900	41.100	41.300	1.610	1.618	1.626
L1	24.800	24.950	25.100	0.976	0.982	0.988
L2	20.300	20.450	21.100	0.799	0.805	0.831
Φ	7.10	7.20	7.30	0.280	0.283	0.287
e	5.450TYP			0.215TYP		
H	5.980REF			0.235REF		
h	0.000	0.150	0.300	0.000	0.006	0.012

Customer Service

Worldwide Sales and Service:
Sales@ruichips.com

Technical Support:
Technical@ruichips.com

Investor Relations Contacts:
Investor@ruichips.com

Marcom Contact:
Marcom@ruichips.com

Editorial Contact:
Editorial@ruichips.comm

HR Contact:
HR@ruichips.com

Legal Contact:
Legal@ruichips.com

Shen Zhen RUICHIPS Semiconductor CO., LTD
Room 501, the 5floor An Tong Industrial Building,
NO.207 Mei Hua Road Fu Tian Area Shen Zhen City, CHINA

TEL: (86-755) 8311-5334
FAX: (86-755) 8311-4278
E-mail: Sales-SZ@ruichips.com