PASTERNACK®
www.pasternack.com

RP TNC Female Connector Crimp/Solder Attachment For PE-C400, PE-B400, PE-B405, LMR-400, LMR-400-DB, LMR-400-UF

TECHNICAL DATA SHEET PE44673

RP TNC Female Connector Crimp/Solder Attachment For PE-C400, PE-B400, PE-B405, LMR-400, LMR-400-DB, LMR-400-UF

Configuration

Connector	TNC Female Reverse Polarity
Connector Interface Type	PE-C400,PE-B400,PE-B405,LMR-400,LMR-400-DB,LMR-400-UF
Cable Attachment Method (Shield/Contact)	Crimp/Solder
Body Style	Straight

Electrical Specifications

Impedance, Ohms	50

Mechanical Specifications

Size

Length, in [mm]	1.595 [40.51]
Width/Dia., in [mm]	0.54 [13.72]
Weight, lbs [g]	0.068 [30.84]

Connector

Type	TNC Female Reverse Polarity
Contact Material and Plating	Gold
Body Material and Plating	Brass, Nickel
Dielectric Type	PTFE

Compliance Certifications (visit www.Pasternack.com for current document)

RoHS Compliant	Yes

Plotted and Other Data

Notes:	Values at 25 °C, sea level

RP TNC Female Connector Crimp/Solder Attachment For PE-C400, PE-B400, PE-B405, LMR-400, LMR-400-DB, LMR-400-UF from Pasternack Enterprises has same day shipment for domestic and International orders. Our RF, microwave and fiber optic products maintain a 99% availability and are part of the broadest selection in the industry.

Click the following link (or enter part number in “SEARCH” on website) to obtain additional part information including price, inventory and certifications: RP TNC Female Connector Crimp/Solder Attachment For PE-C400, PE-B400, PE-B405, LMR-400, LMR-400-DB, LMR-400-UF PE44673

URL: http://www.pasternack.com/tnc-female-reverse-polarity-pe-c400-0.400-connector-pe44673-p.aspx

The information contained in this document is accurate to the best of our knowledge and representative of the part described herein. It may be necessary to make modifications to the part and/or the documentation of the part, in order to implement improvements. Pasternack reserves the right to make such changes as required. Unless otherwise stated, all specifications are nominal.

Pasternack Enterprises, Inc. • P.O. Box 16759, Irvine, CA 92623
Phone: (866) 727-8376 or (949) 261-1920 • **Fax:** (949) 261-7451
Sales@Pasternack.com • Techsupport@Pasternack.com

ISO 9001 : 2008 Registered

© 2013 Pasternack Enterprises All Rights Reserved

PE44673 CAD Drawing

RP TNC Female Connector Crimp/Solder Attachment For PE-C400, PE-B400, PE-B405, LMR-400, LMR-400-DB, LMR-400-UF

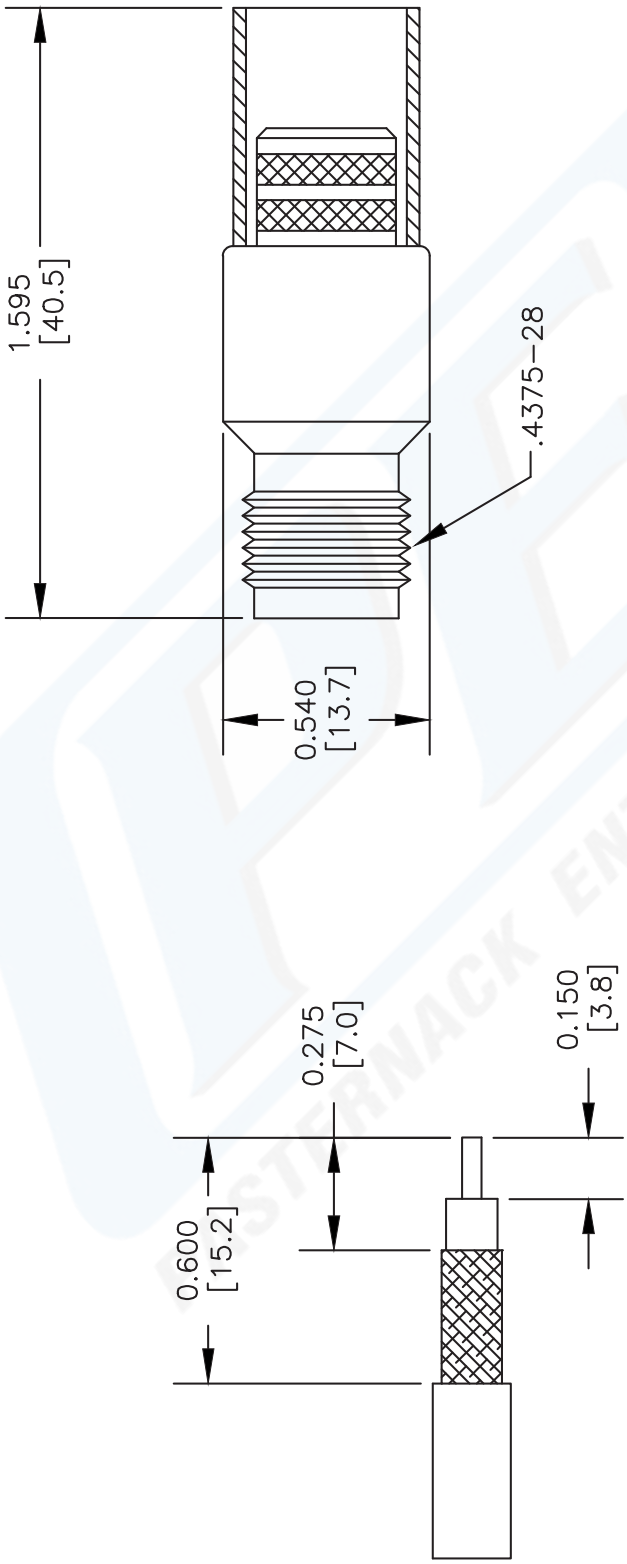

STRIPPING DIMENSIONS

CRIMP SIZE REQUIRED

CONTACT: SOLDER

FERRULE: .429" HEX CRIMP TOOL

NOTES:
1. UNLESS OTHERWISE SPECIFIED ALL DIMENSIONS ARE NOMINAL.
2. ALL SPECIFICATIONS ARE SUBJECT TO CHANGE WITHOUT NOTICE AT ANY TIME.
3. DIMENSIONS ARE IN INCHES [mm].
4. FITS MIL-C-17 AND EQUIVALENT CABLES.

DWG TITLE **PE44673**

FSCM NO. 53919

CAD FILE 102109 | SCALE N/A | SIZE A | XXXX

PASTERNACK®
Pasternack Enterprises, Inc.
P.O. Box 16759 | Irvine | CA | 92623
Phone: (949) 261-1920 | **Fax:** (949) 261-7451
Website: www.pasternack.com | **E-Mail:** sales@pasternack.com

© 2013 Pasternack Enterprises All Rights Reserved