USB251xB/xBi

USB 2.0 Hi-Speed Hub Controller

General Description

The Microchip USB251xB/xBi hub is a family of low-power, configurable, MTT (multi transaction translator) hub controller IC products for embedded USB solutions. The *x* in the part number indicates the number of downstream ports available, while the *B* indicates battery charging support. The Microchip hub supports low-speed, full-speed, and hi-speed (if operating as a hi-speed hub) downstream devices on all of the enabled downstream ports.

Highlights

- High performance, low-power, small footprint hub controller IC with 2, 3, or 4 downstream ports
- Fully compliant with the *USB 2.0 Specification* [1]
- Enhanced OEM configuration options available through either a single serial I^2C EEPROM, or SMBus slave port
- **MultiTRAK**™
  - High-performance multiple transaction translator which provides one transaction translator per port
- **PortMap**
  - Flexible port mapping and disable sequencing
- **PortSwap**
  - Programmable USB differential-pair pin locations ease PCB design by aligning USB signal lines directly to connectors
- **PHYBoost**
  - Programmable USB signal drive strength for recovering signal integrity using 4-level driving strength resolution

Features

- USB251xB/xBi products are fully footprint compatible with USB251x/xi/xA/xAi products as direct drop-in replacements
  - — Cost savings include using the same PCB components and application of USB-IF Compliance by Similarity
- Full power management with individual or ganged power control of each downstream port
- Fully integrated USB termination and pull-up/pull-down resistors
- Supports a single external 3.3 V supply source; internal regulators provide 1.2 V internal core voltage
- Onboard 24 MHz crystal driver or external 24 MHz clock input
- Customizable vendor ID, product ID, and device ID
- 4 kilovolts of HBM JESD22-A114F ESD protection (powered and unpowered)
- Supports self- or bus-powered operation
- Supports the USB Battery Charging specification Rev. 1.1 for Charging Downstream Ports (CDP)
- The USB251xB/xBi offers the following packages:
  - 36-pin SQFN (6x6 mm) (Preferred)
  - 36-pin QFN (6x6 mm) (Legacy)
- USB251xBi products support the industrial temperature range of -40ºC to +85ºC
- USB251xB products support the extended commercial temperature range of 0ºC to +85ºC

Applications

- LCD monitors and TVs
- Multi-function USB peripherals
- PC motherboards
- Set-top boxes, DVD players, DVR/PVR
- Printers and scanners
- PC media drive bay
- Portable hub boxes
- Mobile PC docking
- Embedded systems

© 2022 Microchip Technology Inc. and its subsidiaries

TO OUR VALUED CUSTOMERS

It is our intention to provide our valued customers with the best documentation possible to ensure successful use of your Microchip products. To this end, we will continue to improve our publications to better suit your needs. Our publications will be refined and enhanced as new volumes and updates are introduced.

If you have any questions or comments regarding this publication, please contact the Marketing Communications Department via E-mail at **docerrors@microchip.com**. We welcome your feedback.

Most Current Data Sheet

To obtain the most up-to-date version of this data sheet, please register at our Worldwide Web site at:

http://www.microchip.com

You can determine the version of a data sheet by examining its literature number found on the bottom outside corner of any page. The last character of the literature number is the version number, (e.g., DS30000000A is version A of document DS30000000).

Errata

An errata sheet, describing minor operational differences from the data sheet and recommended workarounds, may exist for current devices. As device/documentation issues become known to us, we will publish an errata sheet. The errata will specify the revision of silicon and revision of document to which it applies.

To determine if an errata sheet exists for a particular device, please check with one of the following:

- Microchip's Worldwide Web site; http://www.microchip.com
- Your local Microchip sales office (see last page)

When contacting a sales office, please specify which device, revision of silicon and data sheet (include -literature number) you are using.

Customer Notification System

Register on our web site at **www.microchip.com** to receive the most current information on all of our products.

© 2022 Microchip Technology Inc. and its subsidiaries

Table of Contents

1.0 Introduction 4
2.0 Block Diagram 6
3.0 Pin Information 7
4.0 Battery Charging Support 17
5.0 Initial Interface/Configuration Options 19
6.0 DC Parameters 39
7.0 AC Specifications 44
8.0 Package Marking Information 46
9.0 Package Information 48
Appendix A: Acronyms 50
Appendix B: References 51
Appendix C: Data Sheet Revision History 52
The Microchip Web Site 54
Customer Change Notification Service 54
Customer Support 54
Product Identification System 55

© 2022 Microchip Technology Inc. and its subsidiaries

1.0 INTRODUCTION

The Microchip USB251xB/xBi hub family is a group of low-power, configurable, MTT (multi transaction translator) hub controller ICs. The hub provides downstream ports for embedded USB solutions and is fully compliant with the *USB 2.0 Specification* [1]. Each of the hub controllers can attach to an upstream port as a full-speed or full-/hi-speed hub. The hub can support low-speed, full-speed, and hi-speed downstream devices when operating as a hi-speed hub.

All required resistors on the USB ports are integrated into the hub. This includes all series termination resistors and all required pull-down and pull-up resistors on D+ and D- pins. The over-current sense inputs for the downstream facing ports have internal pull-up resistors.

The USB251xB/xBi hub family includes programmable features, such as:

- **MultiTRAK™ Technology**: implements a dedicated Transaction Translator (TT) for each port. Dedicated TTs help maintain consistent full-speed data throughput regardless of the number of active downstream connections.
- **PortMap**: provides flexible port mapping and disable sequences. The downstream ports of a USB251xB/xBi hub can be reordered or disabled in any sequence to support multiple platform designs with minimum effort. For any port that is disabled, the USB251xB/xBi hub controller automatically reorders the remaining ports to match the USB host controller's port numbering scheme.
- **PortSwap**: allows direct alignment of USB signals (D+/D-) to connectors to avoid uneven trace length or crossing of the USB differential signals on the PCB.
- **PHYBoost**: enables 4 programmable levels of USB signal drive strength in downstream port transceivers. PHY-Boost will also attempt to restore USB signal integrity.

1.1 Configurable Features

The USB251xB/xBi hub controller provides a default configuration that may be sufficient for most applications. Strapping option pins (see Section 3.3.1 on page 14) provide additional features to enhance the default configuration. When the hub is initialized in the default configuration, the following features may be configured using the strapping options:

- Downstream non-removable ports, where the hub will automatically report as a compound device
- Downstream disabled ports
- Enabling of battery charging option on individual ports
- The USB251xB/xBi hub controllers can alternatively be configured by an external I^2C EEPROM or a microcontroller as an SMBus slave device. When the hub is configured by an I^2C EEPROM or over SMBus, the following configurable features are provided:
- Support for compound devices on a port-by-port basis
- Selectable over-current sensing and port power control on an individual or ganged basis to match the circuit board component selection
- Customizable vendor ID, product ID, and device ID
- Configurable USB signal drive strength
- Configurable USB differential pair pin location
- Configurable delay time for filtering the over-current sense inputs
- Configurable downstream port power-on time reported to the host
- Indication of the maximum current that the hub consumes from the USB upstream port
- Indication of the maximum current required for the hub controller
- Custom string descriptors (up to 31 characters):
  - Product
  - Manufacturer
  - Serial number
- Battery charging USB251xB/xBi products are fully footprint compatible with USB251x/xi/xA/xAi products:
  - Pin-compatible
  - Direct drop-in replacement
  - Use the same PCB components
  - USB-IF Compliance by Similarity for ease of use and a complete cost reduction solution
  - Product IDs, device IDs, and other register defaults may differ. See Section 5.1 on page 19 for details.

© 2022 Microchip Technology Inc. and its subsidiaries

TABLE 1-1: SUMMARY OF COMPATIBILITIES BETWEEN USB251XB/XBI AND USB251X/XI/XA/XAI PRODUCTS

Part Number	Drop-in Replacement
USB2512	USB2512B
USB2512i	USB2512Bi
USB2512A	USB2512B
USB2512Ai	USB2512Bi
USB2513	USB2513B
USB2513i	USB2513Bi
USB2514	USB2514B
USB2514i	USB2514Bi

Conventions

Within this manual, the following abbreviations and symbols are used to improve readability.

Example	Description
BIT	Name of a single bit within a field
FIELD.BIT	Name of a single bit (BIT) in FIELD
x…y	Range from x to y, inclusive
BITS[m:n]	Groups of bits from m to n, inclusive
PIN	Pin Name
zzzzb	Binary number (value zzzz)
0xzzz	Hexadecimal number (value zzz)
zzh	Hexadecimal number (value zz)
rsvd	Reserved memory location. Must write 0, read value indeterminate
code	Instruction code, or API function or parameter
Section Name	Section or Document name
x	Don’t care
<Parameter>	<> indicate a Parameter is optional or is only used under some conditions
{,Parameter}	Braces indicate Parameter(s) that repeat one or more times
[Parameter]	Brackets indicate a nested Parameter. This Parameter is not real and actually decodes into one or more real parameters.

2.0 BLOCK DIAGRAM

FIGURE 2-1: USB251XB/XBI HUB FAMILY BLOCK DIAGRAM

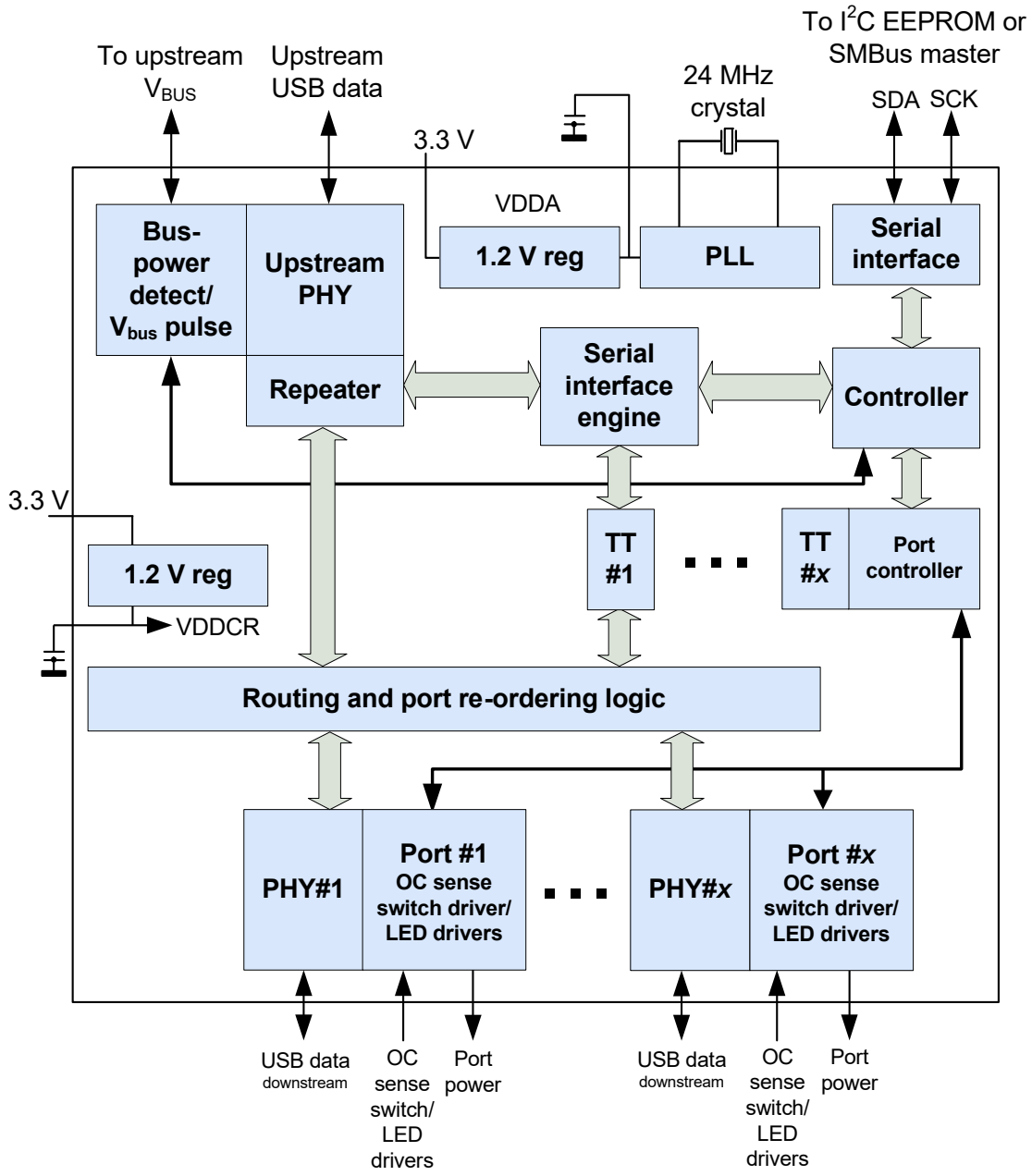

***x* indicates the number of available downstream ports: 2, 3, or 4**

© 2022 Microchip Technology Inc. and its subsidiaries

3.0 PIN INFORMATION

This chapter outlines the pinning configurations for each package type available, followed by a corresponding pin list organized alphabetically. The detailed pin descriptions are listed then outlined by function in Section 3.3, "Pin Descriptions (Grouped by Function)," on page 12.

3.1 Pin Configurations

The following figures detail the pinouts of the various USB251xB/xBi versions.

FIGURE 3-1: USB2512B PIN DIAGRAM

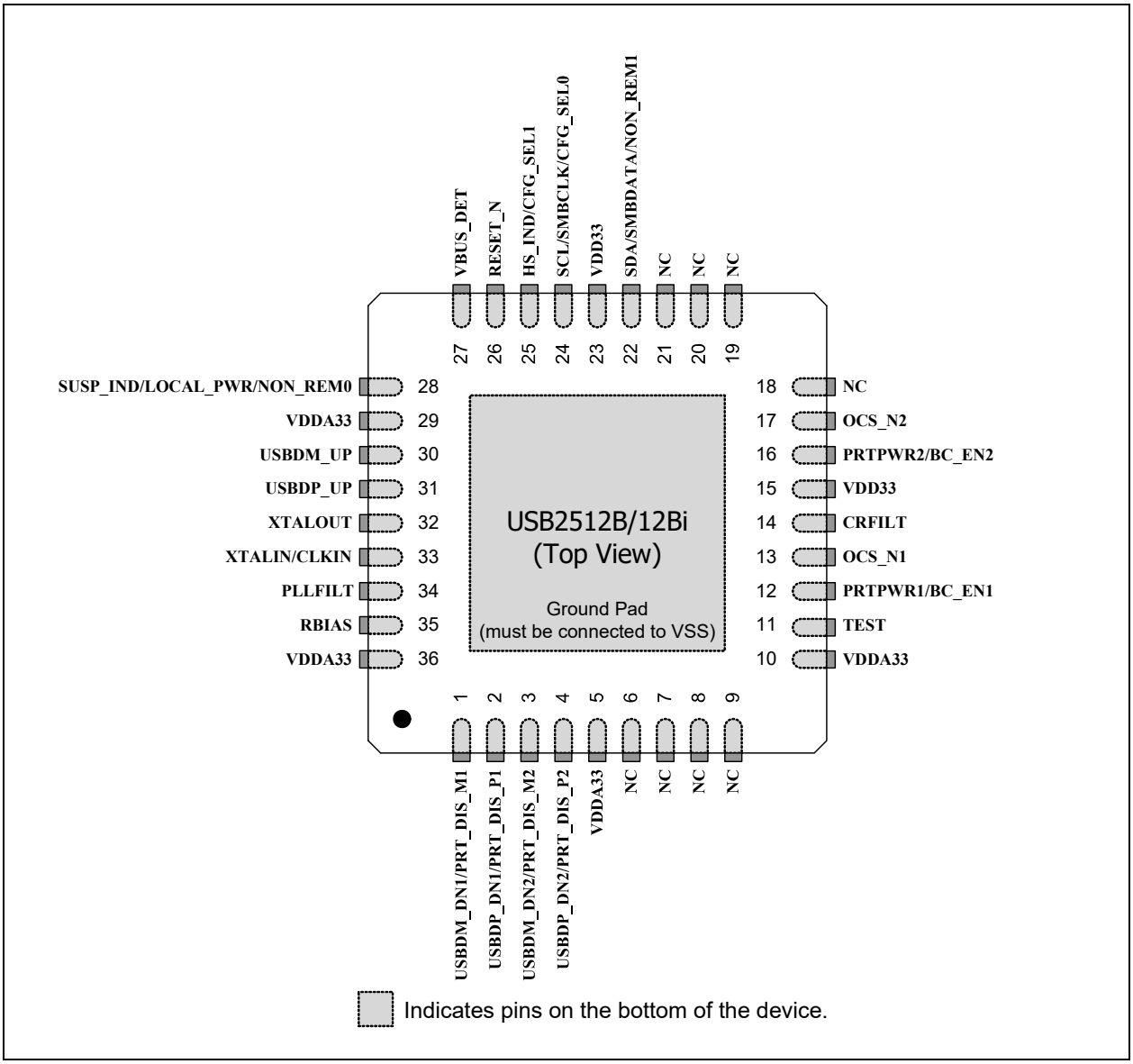

FIGURE 3-2: USB2513B PIN DIAGRAM

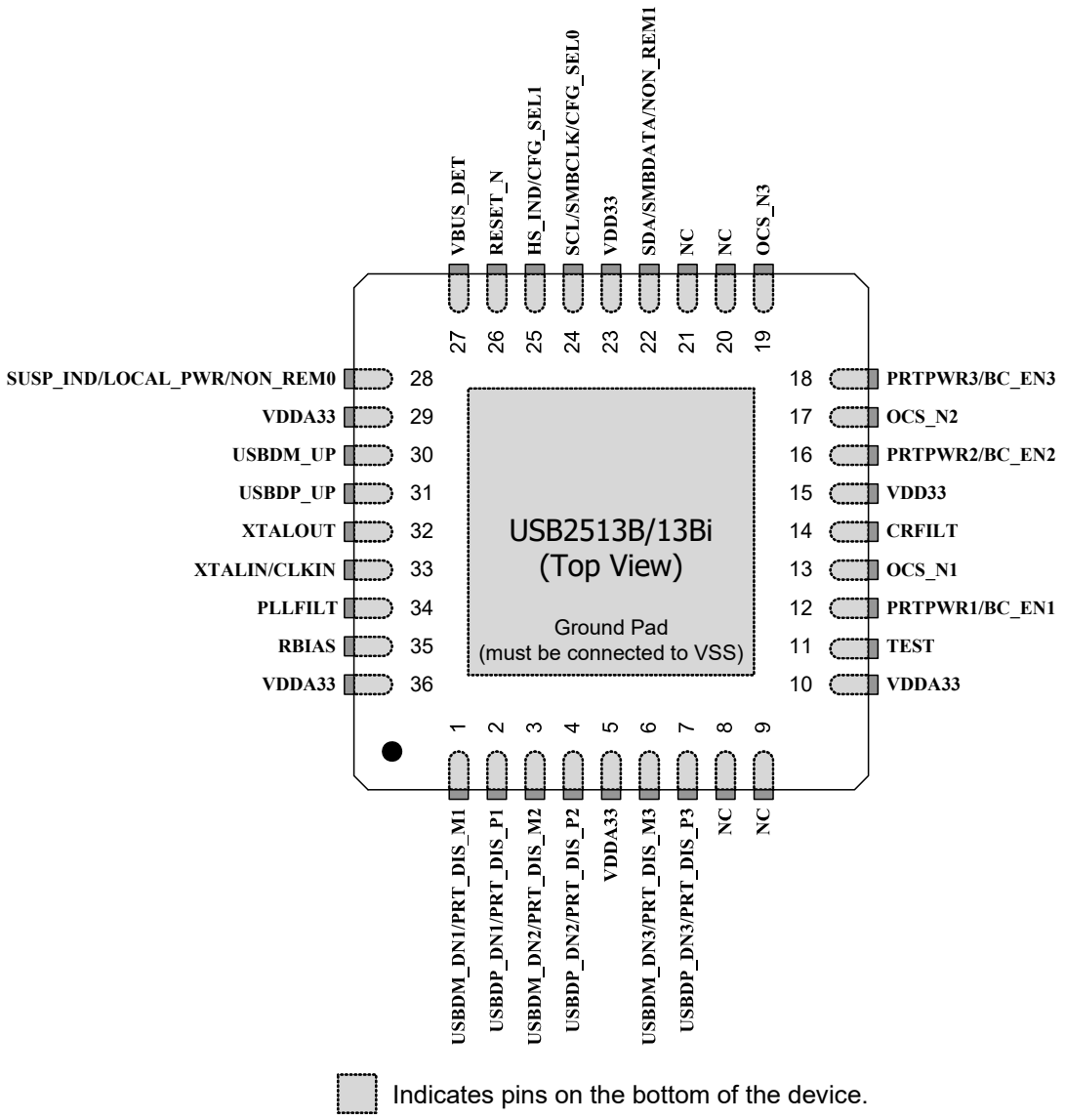

© 2022 Microchip Technology Inc. and its subsidiaries

FIGURE 3-3: USB2514B PIN DIAGRAM

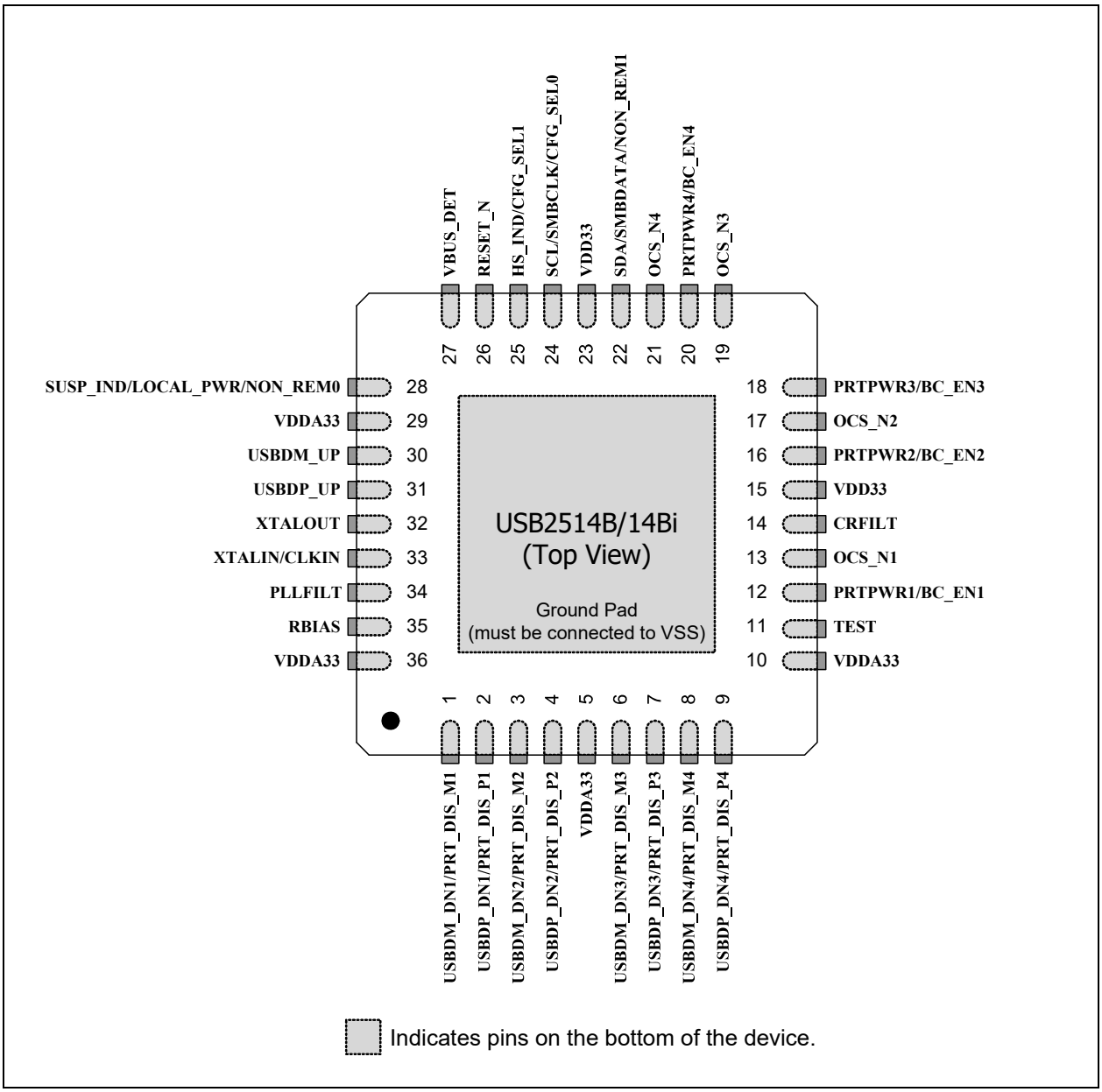

3.2 Pin List (Alphabetical)

TABLE 3-1: USB251XB/XBI PIN LIST (ALPHABETICAL)

Symbol	Name	Pin Numbers		
		USB2512B USB2512Bi	USB2513B USB2513Bi	USB2514B USB2514Bi
BC_EN1	Battery Charging Strap Option	12		
BC_EN2		16		
BC_EN3		-	18	
BC_EN4		-		20
CFG_SEL0	Configuration Programming Selection	24		
CFG_SEL1		25		
CLKIN	External Clock Input	33		
CRFILT	Core Regulator Filter Capacitor	14		
Ground Pad (VSS)	Exposed Pad Tied to Ground (VSS)	ePad		
HS_IND	Hi-Speed Upstream Port Indicator	25		
LOCAL_PWR	Local Power Detection	28		
NC	No Connect	6	-	
NC		7	-	
NC		18	-	
NC		19	-	
NC		8		-
NC		9		-
NC		20		-
NC		21		-
NON_REM0	Non-Removable Port Strap Option	28		
NON_REM1		22		
OCS_N1	Over-Current Sense	13		
OCS_N2		17		
OCS_N3		-	19	
OCS_N4		-		21
PLLFILT	PLL Regulator Filter Capacitor	34		
PRT_DIS_M1	Downstream Port Disable Strap Option	1		
PRT_DIS_M2		3		
PRT_DIS_M3		-	6	
PRT_DIS_M4		-		8
PRT_DIS_P1	Port Disable	2		
PRT_DIS_P2		4		
PRT_DIS_P3		-	7	
PRT_DIS_P4		-		9

© 2022 Microchip Technology Inc. and its subsidiaries

TABLE 3-1: USB251XB/XBI PIN LIST (ALPHABETICAL) (CONTINUED)

Symbol	Name	Pin Numbers		
		USB2512B USB2512Bi	USB2513B USB2513Bi	USB2514B USB2514Bi
PRTPWR1	USB Port Power Enable	12		
PRTPWR2		16		
PRTPWR3		-	18	
PRTPWR4		-		20
RBIAS	USB Transceiver Bias	35		
RESET_N	Reset Input	26		
SCL	Serial Clock	24		
SDA	Serial Data Signal	22		
SMBCLK	System Management Bus Clock	24		
SMBDATA	System Management Bus Data Signal	22		
SUSP_IND	Active/Suspend Status Indicator	28		
TEST	Test Pin	11		
USBDM_UP	USB Bus Data	30		
USBDP_UP		31		
USBDM_DN1	Hi-Speed USB Data	1		
USBDM_DN2		3		
USBDM_DN3		-	6	
USBDM_DN4		-		8
USBDP_DN1		2		
USBDP_DN2		4		
USBDP_DN3		-	7	
USBDP_DN4		-		9
VBUS_DET	Upstream VBUS Power Detection	27		
VDD33	3.3 V Digital Power	15		
VDD33		23		
VDDA33	3.3 V Analog Power	5		
VDDA33		10		
VDDA33		29		
VDDA33		36		
XTALIN	Crystal Input	33		
XTALOUT	Crystal Output	32		

© 2022 Microchip Technology Inc. and its subsidiaries

3.3 Pin Descriptions (Grouped by Function)

An *N* at the end of a signal name indicates that the active (asserted) state occurs when the signal is at a low voltage level. When the *N* is not present, the signal is asserted when it is at a high voltage level. The terms assertion and negation are used exclusively in order to avoid confusion when working with a mixture of active low and active high signals. The term assert, or assertion, indicates that a signal is active, independent of whether that level is represented by a high or low voltage. The term negate, or negation, indicates that a signal is inactive.

TABLE 3-2: USB251XB/XBI PIN DESCRIPTIONS

Symbol	Buffer Type	Description
UPSTREAM USB 2.0 INTERFACES		
USBDM_UP **USBDP_UP**	IO-U	USB Data: connect to the upstream USB bus data signals (host, port, or upstream hub).
VBUS_DET	I	Detect Upstream VBUS Power: detects the state of the upstream VBUS power. The hub monitors **VBUS_DET** to determine when to assert the internal D+ pull-up resistor: (signaling a connect event). When designing a detachable hub, this pin should be connected to VBUS on the upstream port via a 2:1 voltage divider. Two 100 kΩ resistors are suggested. For self-powered applications with a permanently attached host, this pin must be connected to a dedicated host control output, or connected to the 3.3 V domain that powers the host (typically **VDD33**).
DOWNSTREAM USB 2.0 INTERFACES		
USBDP_DN[x:1]/PRT_DIS_P[x:1]	IO-U	Hi-Speed USB Data: connect to the downstream USB peripheral devices attached to the hub's port. To disable, use a 10 kΩ pull-up resistor to 3.3 V.
USBDM_DN[x:1]/PRT_DIS_M[x:1]		Downstream Port Disable Strap Option: when enabled by package and configuration settings (see Table 5-1 on page 19), this pin is sampled at **RESET_N** negation to determine if the port is disabled. To disable a port, pull up both **PRT_DIS_M[x:1]** and **PRT_DIS_P[x:1]** pins for the corresponding port number(s). See Section 3.3.1, on page 14 for pull up details.
PRTPWR[x:1]/ **BC_EN[x:1]**	O12	USB Power Enable: enables power to USB peripheral devices downstream.
	IPD	Battery Charging Strap Option: when enabled by package and configuration settings (see Table 5-1), the pin will be sampled at **RESET_N** negation to determine if ports [x:1] support the battery charging protocol. When supporting the battery charging protocol, the hub also supports external port power controllers. The battery charging protocol enables a device to draw the currents per the USB battery charging specification. See Section 3.3.1, on page 14 for strap pin details. `1` : Battery charging feature is supported for port *x* `0` : Battery charging feature is not supported for port *x*
OCS_N[x:1]	IPU	Over-Current Sense: input from external current monitor indicating an over-current condition.
RBIAS	I-R	USB Transceiver Bias: a 12.0 kΩ (+/- 1%) resistor is attached from ground to this pin to set the transceiver's internal bias settings.

© 2022 Microchip Technology Inc. and its subsidiaries

TABLE 3-2: USB251XB/XBI PIN DESCRIPTIONS (CONTINUED)

Symbol	Buffer Type	Description
SERIAL PORT INTERFACES		
SDA/	I/OSD12	Serial Data Signal
SMBDATA/		System Management Bus Signal
NON_REM1		Non-Removable Port 1 Strap Option: when enabled by package and configuration options (see Table 5-1 on page 19), this pin will be sampled (in conjunction with **LOCAL_PWR/SUSP_IND/NON_REM0**) at **RESET_N** negation to determine if ports [x:1] contain permanently attached (non-removable) devices: **NON_REM[1:0]** = `00` : all ports are removable **NON_REM[1:0]** = `01` : port 1 is non-removable **NON_REM[1:0]** = `10` : ports 1 and 2 are non-removable **NON_REM[1:0]** = `11` : when available, ports 1, 2, and 3 are non-removable When **NON_REM[1:0]** is chosen such that there is a non-removable device, the hub will automatically report itself as a compound device (using the proper descriptors).
RESET_N	IS	RESET Input: the system can reset the chip by driving this input low. The minimum active low pulse is 1 µs.
SCL/	I/OSD12	Serial Clock (SCL)
SMBCLK/		System Management Bus Clock
CFG_SEL0		Configuration Select: the logic state of this multifunction pin is internally latched on the rising edge of **RESET_N** (**RESET_N** negation), and will determine the hub configuration method as described in Table 5-1.
HS_IND/	I/O12	Hi-Speed Upstream Port Indicator: upstream port connection speed. Asserted = the hub is connected at HS Negated = the hub is connected at FS **Note:** When implementing an external LED on this pin, the active state is indicated above and outlined in Section 3.3.1.3, on page 15.
CFG_SEL1		Configuration Programming Select 1: the logic state of this pin is internally latched on the rising edge of **RESET_N** (**RESET_N** negation), and will determine the hub configuration method as described in Table 5-1.
MISC		
XTALIN	ICLKx	Crystal Input: 24 MHz crystal. This pin connects to either one terminal of the crystal or to an external 24 MHz clock when a crystal is not used.
CLKIN		External Clock Input: this pin connects to either one terminal of the crystal or to an external 24 MHz clock when a crystal is not used.
XTALOUT	OCLKx	Crystal Output: this is the other terminal of the crystal circuit with 1.2 V p-p output and a weak (< 1mA) driving strength. When an external clock source is used to drive **XTALIN/CLKIN**, leave this pin unconnected, or use with appropriate caution.

© 2022 Microchip Technology Inc. and its subsidiaries

TABLE 3-2: USB251XB/XBI PIN DESCRIPTIONS (CONTINUED)

Symbol	Buffer Type	Description
SUSP_IND/	I/O	Active/Suspend Status LED: indicates USB state of the hub. Negated = unconfigured; or configured and in USB suspend Asserted = hub is configured and is active (i.e., not in suspend)
LOCAL_PWR/		Local Power: detects availability of local self-power source. Low = self/local power source is NOT available (i.e., the hub gets all power from the upstream USB VBus) High = self/local power source is available
NON_REM0		Non-Removable 0 Strap Option: when enabled by package and configuration settings (see Table 5-1 on page 19), this pin will be sampled (in conjunction with **NON_REM[1]**) at **RESET_N** negation to determine if ports [x:1] contain permanently attached (non-removable) devices: **Note:** When implementing an external LED on this pin, the active state is outlined below and detailed in Section 3.3.1.3, on page 15. **NON_REM[1:0]** = 00 : all ports are removable; LED is active high **NON_REM[1:0]** = 01 : port 1 is non-removable; LED is active low **NON_REM[1:0]** = 10 : ports 1 and 2 are non-removable; LED is active high **NON_REM[1:0]** = 11 : (when available) ports 1, 2, and 3 are non-removable; LED is active low
TEST	IPD	Test Pin: treat as a no connect pin or connect to ground. No trace or signal should be routed or attached to this pin.
POWER, GROUND, and NO CONNECTS		
CRFILT		VDD Core Regulator Filter Capacitor: this pin can have up to a 0.1 µF low-ESR capacitor to VSS, or be left unconnected.
VDD33		3.3 V Power
VDDA33		3.3 V Analog Power
PLLFILT		PLL Regulator Filter Capacitor: this pin can have up to a 0.1 µF low-ESR capacitor to VSS, or be left unconnected.
VSS		Ground Pad/ePad: the package slug is the only VSS for the device and must be tied to ground with multiple vias.
NC		No Connect: no signal or trace should be routed or attached to all NC pins.

3.3.1 CONFIGURING THE STRAP PINS

If a pin's strap function is enabled thru the hub configuration selection, (Table 5-1, “Initial Interface/Configuration Options,” on page 19) the strap pins must be pulled either high or low using the values provided in Table 3-3. Each strap option is dependent on the pin’s buffer type, as outlined in the sections that follow.

TABLE 3-3: STRAP OPTION SUMMARY

Strap Option	Resistor Value	Buffer Type	Notes
Non-Removable	47 - 100 kΩ	I/O	
Internal Pull-Down	10 kΩ	IPD	• Only applicable to port power pins • Contains a built-in resistor
LED	47 - 100 kΩ	I/O	

© 2022 Microchip Technology Inc. and its subsidiaries

3.3.1.1 Non-Removable

If a strap pin's buffer type is I/O, an external pull-up or pull-down must be implemented as shown in Figure 3-4. Use Strap High to set the strap option to 1 and Stap Low to set the strap option to 0. When implementing the Strap Low option, no additional components are needed (i.e., the internal pull-down provides the resistor).

FIGURE 3-4: NON-REMOVABLE PIN STRAP EXAMPLE

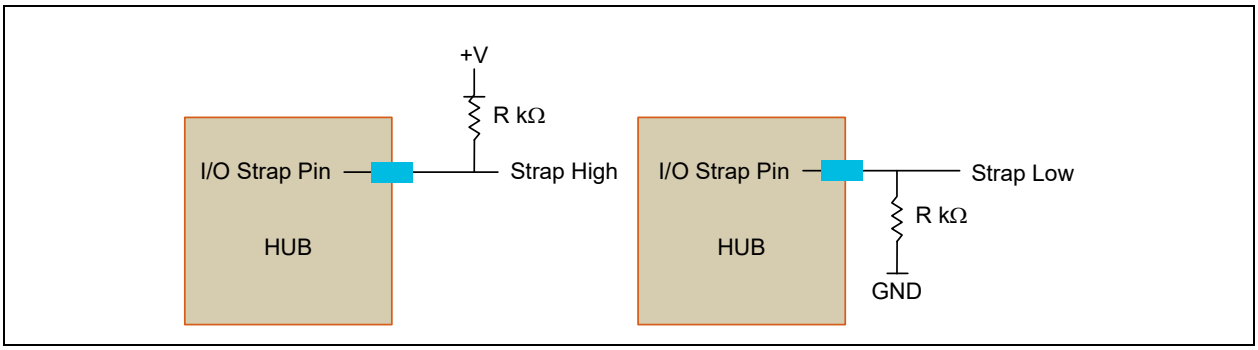

3.3.1.2 Internal Pull-Down (IPD)

If a strap pin's buffer type is IPD (pins **BC_EN[x:1]**), one of the two hardware configurations outlined below must be implemented. Use the Strap High configuration to set the strap option value to 1 and Strap Low to set the strap option value to 0.

FIGURE 3-5: PIN STRAP OPTION WITH IPD PIN EXAMPLE

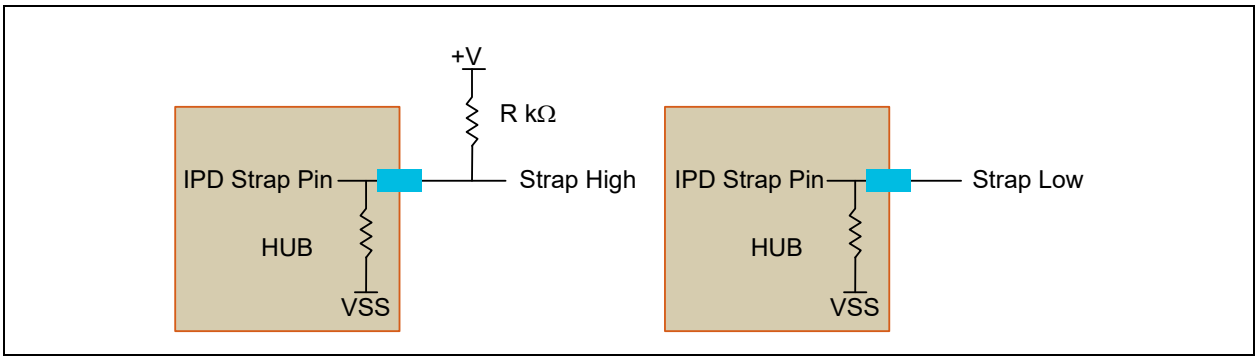

3.3.1.3 LED

If a strap pin's buffer type is I/O and shares functionality with an LED, the hardware configuration outlined below must be implemented. The internal logic will drive the LED appropriately (active high or low) depending on the sampled strap option. Use the Strap High configuration to set the strap option value to 1 and Strap Low to set the strap option to 0.

FIGURE 3-6: LED PIN STRAP EXAMPLE

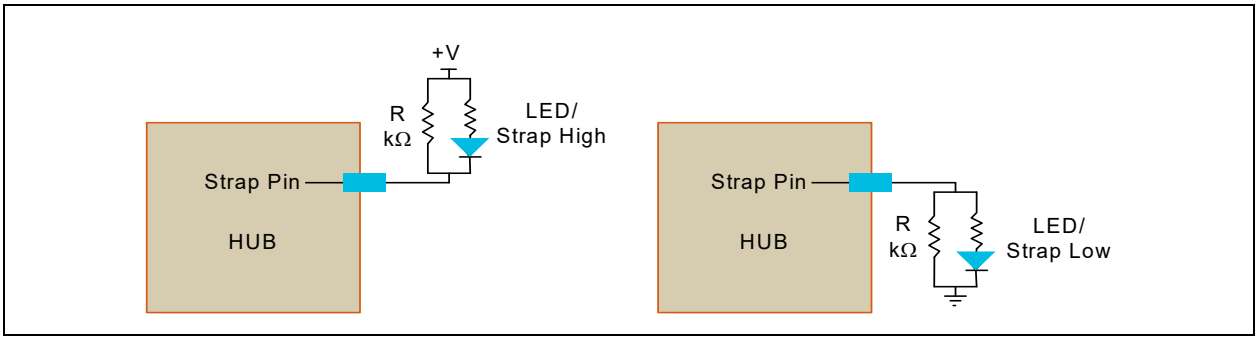

3.4 Buffer Type Descriptions

TABLE 3-4: BUFFER TYPE DESCRIPTIONS

Buffer Type	Description
I	Input
I/O	Input/output
IPD	Input with internal weak pull-down resistor
IPU	Input with internal weak pull-up resistor
IS	Input with Schmitt trigger
O12	Output 12 mA
I/O12	Input/output buffer with 12 mA sink and 12 mA source
I/OSD12	Open drain with Schmitt trigger and 12 mA sink. Meets the I^2C-Bus Specification [2] requirements.
ICLKx	XTAL clock input
OCLKx	XTAL clock output
I-R	RBIAS
I/O-U	Analog input/output defined in USB specification

© 2022 Microchip Technology Inc. and its subsidiaries

4.0 BATTERY CHARGING SUPPORT

The USB251xB/xBi hub provides support for battery charging devices on a per port basis in compliance with the *USB Battery Charging Specification, Revision 1.1*. The hub can be configured to individually enable each downstream port for battery charging support either via pin strapping as illustrated in Figure 4-1 or by setting the corresponding configuration bits via I^2C EEPROM or SMBus (Section 5.1 on page 19).

FIGURE 4-1: BATTERY CHARGING VIA EXTERNAL POWER SUPPLY

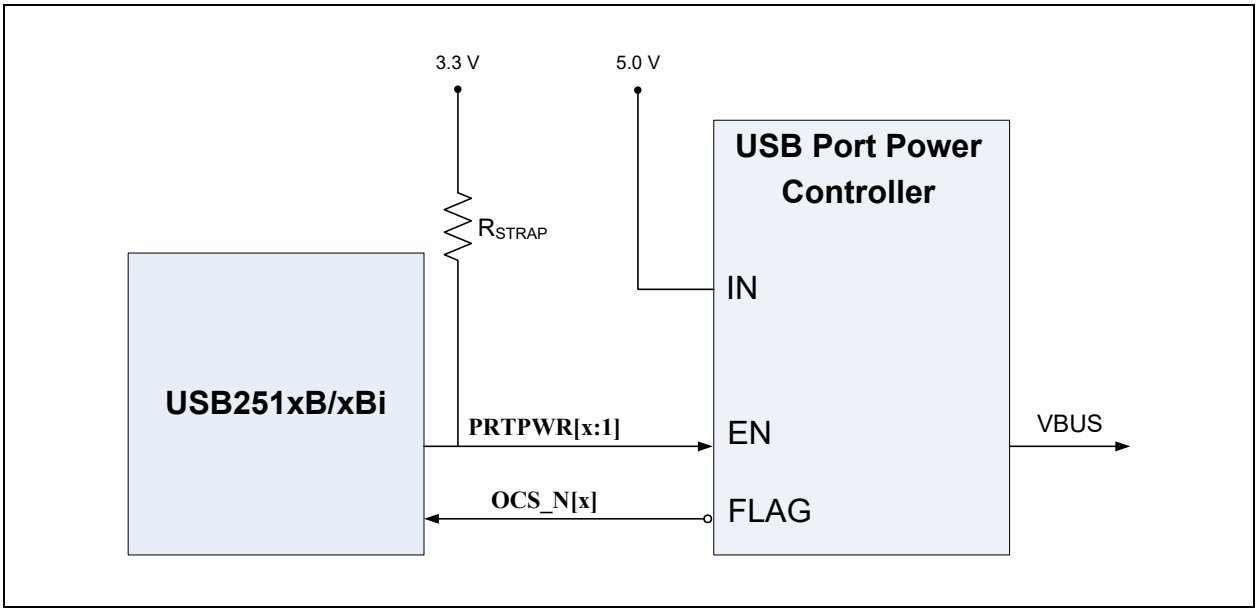

Note: R_{STRAP} enables battery charging.

4.1 USB Battery Charging

A downstream port enabled for battery charging turns on port power as soon as the power on reset and hardware configuration process has completed. The hub does not need to be enumerated nor does **VBUS_DET** need to be asserted for the port power to be enabled. These conditions allow battery charging in S3, S4, and S5 system power states as well as in the fully operational state. The *USB Battery Charging Specification* does not interfere with standard USB operation, which allows a device to perform battery charging at any time.

A port that supports battery charging must be able to support 1.5 amps of current on VBUS. Standard USB port power controllers typically only allow for 0.8 amps of current before detecting an over-current condition. Therefore, the 5 volt power supply, port power controller, or over-current protection devices must be chosen to handle the larger current demand compared to standard USB hub designs.

4.1.1 SPECIAL BEHAVIOR OF PRTPWR PINS

The USB251xB/xBi enables VBUS by asserting the port power (**PRTPWR**) as soon as the hardware configuration process has completed. If the port detects an over-current condition, **PRTPWR** will be turned off to protect the circuitry from overloading. If an over-current condition is detected when the hub is not enumerated, **PRTPWR** can only be turned on from the host or if **RESET_N** is toggled. These behaviors provide battery charging even when the hub is not enumerated and protect the hub from sustained short circuit conditions. If the short circuit condition persists when the hub is plugged into a host system the user is notified that a port has an over-current condition. Otherwise **PRTPWR** turned on by the host system and the ports operate normally.

© 2022 Microchip Technology Inc. and its subsidiaries

4.2 Battery Charging Configuration

The battery charging option can be configured in one of two ways:

- When the hub is brought up in the default configuration with strapping options enabled, with the **PRT-PWR[x:1]/BC_EN[x:1]** pins configured. See the following sections for details:
  - Section 3.3, "Pin Descriptions (Grouped by Function)," on page 12
  - Section 3.3.1.2, "Internal Pull-Down (IPD)," on page 15
- When the hub is initialized for configuration over I^2C EEPROM or SMBus. Either of these interfaces can be used to configure the battery charging option.

4.2.1 BATTERY CHARGING ENABLED VIA I^2C EEPROM OR SMBUS

Register memory map location 0xD0 is allocated for battery charging support. The Battery Charging register at location 0xD0 starting from bit 1 enables battery charging for each downstream port when asserted. Bit 1 represents port 1, bit 2 represents port 2, etc. Each port with battery charging enabled asserts the corresponding **PRTPWR[x:1]** pin.

© 2022 Microchip Technology Inc. and its subsidiaries

5.0 INITIAL INTERFACE/CONFIGURATION OPTIONS

The hub must be configured in order to correctly function when attached to a USB host controller. The hub can be configured either internally or externally by setting the **CFG_SEL[1:0]** pins (immediately after **RESET_N** negation) as outlined in the table below.

Note:	See Chapter 11 (Hub Specification) of the USB specification for general details regarding hub operation and functionality.

To configure the hub externally, there are two principal ways to interface to the hub: over SMBus or I^2C EEPROM. The hub can be configured internally, where several default configurations are available as described in the table below. When configured internally, additional configuration is available using the strap options (listed in Section 3.3.1 on page 14).

Note:	Strap options are not available when configuring the hub over I^2C or SMBus.

TABLE 5-1: INITIAL INTERFACE/CONFIGURATION OPTIONS

CFG_SEL[1]	CFG_SEL[0]	Description
0	0	Default configuration: • Strap options enabled • Self-powered operation enabled • Individual power switching • Individual over-current sensing
0	1	The hub is configured externally over SMBus (as an SMBus slave device): • Strap options disabled • All registers configured over SMBus
1	0	Default configuration with the following overrides: • Bus-powered operation
1	1	The hub is configured over 2-wire I^2C EEPROM: • Strap options disabled • All registers configured by I^2C EEPROM

5.1 Internal Register Set (Common to I^2C EEPROM and SMBus)

The register set available when configuring the hub to interface over I^2C or SMBus is outlined in the table below. Each register has R/W capability, where EEPROM reset values are 0x00. Reserved registers should be written to 0 unless otherwise specified. Contents read from unavailable registers should be ignored.

Address	Register Name	Default ROM Values (Hexidecimal)		
		USB2512B/12Bi	USB2513B/13Bi	USB2514B/14Bi
00h	Vendor ID LSB	24		
01h	Vendor ID MSB	04		
02h	Product ID LSB	12	13	14
03h	Product ID MSB	25		
04h	Device ID LSB	B3		
05h	Device ID MSB	0B		

© 2022 Microchip Technology Inc. and its subsidiaries

Address	Register Name	Default ROM Values (Hexidecimal)		
		USB2512B/12Bi	USB2513B/13Bi	USB2514B/14Bi
06h	Configuration Data Byte 1	9B		
07h	Configuration Data Byte 2	20		
08h	Configuration Data Byte 3	02		
09h	Non-Removable Devices	00		
0Ah	Port Disable (Self)	00		
0Bh	Port Disable (Bus)	00		
0Ch	Max Power (Self)	01		
0Dh	Max Power (Bus)	32		
0Eh	Hub Controller Max Current (Self)	01		
0Fh	Hub Controller Max Current (Bus)	32		
10h	Power-on Time	32		
11h	Language ID High	00		
12h	Language ID Low	00		
13h	Manufacturer String Length	00		
14h	Product String Length	00		
15h	Serial String Length	00		
16h-53h	Manufacturer String	00		
54h-91h	Product String	00		
92h-CFh	Serial String	00		
D0h	Battery Charging Enable	00		
E0h	rsvd	00		
F5h	rsvd	00		
F6h	Boost_Up	00		
F7h	rsvd	00		
F8h	Boost_x:0	00		
F9h	rsvd	00		
FAh	Port Swap	00		
FBh	Port Map 12	00		
FCh	Port Map 34	-	00	
FD-FEh	rsvd	00		
FFh	Status/Command Note: SMBus register only	00		

© 2022 Microchip Technology Inc. and its subsidiaries

5.1.1 REGISTER 00H: VENDOR ID (LSB)

Bit Number	Bit Name	Description
7:0	VID_LSB	Least Significant Byte of the Vendor ID: a 16-bit value that uniquely identifies the Vendor of the user device (assigned by USB-Interface Forum). Set this field using either the SMBus or I^2C EEPROM interface options.

5.1.2 REGISTER 01H: VENDOR ID (MSB)

Bit Number	Bit Name	Description
7:0	VID_MSB	Most Significant Byte of the Vendor ID: a 16-bit value that uniquely identifies the Vendor of the user device (assigned by USB-Interface Forum). Set this field using either the SMBus or I^2C EEPROM interface options.

5.1.3 REGISTER 02H: PRODUCT ID (LSB)

Bit Number	Bit Name	Description
7:0	PID_LSB	Least Significant Byte of the Product ID: a 16-bit value that uniquely identifies the Product ID of the user device. Set this field using either the SMBus or I^2C EEPROM interface options.

5.1.4 REGISTER 03H: PRODUCT ID (MSB)

Bit Number	Bit Name	Description
7:0	PID_MSB	Most Significant Byte of the Product ID: a 16-bit value that uniquely identifies the Product ID of the user device. Set this field using either the SMBus or I^2C EEPROM interface options.

5.1.5 REGISTER 04H: DEVICE ID (LSB)

Bit Number	Bit Name	Description
7:0	DID_LSB	Least Significant Byte of the Device ID: a 16-bit device release number in BCD format (assigned by OEM). Set this field using either the SMBus or I^2C EEPROM interface options.

5.1.6 REGISTER 05H: DEVICE ID (MSB)

Bit Number	Bit Name	Description
7:0	DID_MSB	Most Significant Byte of the Device ID: a 16-bit device release number in BCD format (assigned by OEM). Set this field using either the SMBus or I^2C EEPROM interface options.

© 2022 Microchip Technology Inc. and its subsidiaries

5.1.7 REGISTER 06H: CONFIG_BYTE_1

Bit Number	Bit Name	Description
7	SELF_BUS_PWR	Self or Bus Power: selects between self- and bus-powered operation. The hub is either self-powered (draws less than 2 mA of upstream bus power) or bus-powered (limited to a 100 mA maximum of upstream power prior to being configured by the host controller). When configured as a bus-powered device, the hub consumes less than 100 mA of current prior to being configured. After configuration, the bus-powered hub, along with all associated hub circuitry, any embedded devices (if part of a compound device), and all externally available downstream ports (max 100 mA) must consume no more than 500 mA of upstream VBUS current. The current consumption is system dependent and must not violate the *USB 2.0 Specification* [1]. When configured as a self-powered device, < 1 mA of upstream VBUS current is consumed and all ports are available. Each port is capable of sourcing 500 mA of current. This field is set over either the SMBus or I^2C EEPROM interface options. `0` : bus-powered operation `1` : self-powered operation If dynamic power switching is enabled (Section 5.1.8), this bit is ignored and **LOCAL_PWR** is used to determine if the hub is operating from self or bus power.
6	rsvd	
5	HS_DISABLE	Hi-Speed Disable: disables the capability to attach as either a hi- or full-speed device, forcing full-speed attachment only (i.e., no hi-speed support). `0` : hi-/full-speed `1` : full-speed only (hi-speed disabled)
4	MTT_ENABLE	Multi-TT Enable: enables one transaction translator per port operation. Selects between a mode where only one transaction translator is available for all ports (single-TT), or each port gets a dedicated transaction translator (multi-TT). `0` : single TT for all ports `1` : multi-TT (one TT per port)
3	EOP_DISABLE	EOP Disable: disables End Of Packet (EOP) generation at End Of Frame Time #1 (EOF1) when in full-speed mode. During full-speed operation only, the hub can send EOP when no downstream traffic is detected at EOF1. See the *USB 2.0 Specification, Section 11.3.1* for details. `0` : EOP generation is normal `1` : EOP generation is disabled
2:1	CURRENT_SNS	Over-Current Sense: selects current sensing on all ports (ganged); a port-by-port basis (individual); or none (for bus-powered hubs only). The ability to support current sensing on a ganged or port-by-port basis is hardware implementation dependent. `00` : ganged sensing `01` : individual sensing `1x` : over-current sensing not supported (use with bus-powered configurations)
0	PORT_PWR	Port Power Switching: enables power switching on all ports (ganged) or a port-by-port basis (individual). The ability to support power enabling on a ganged or port-by-port basis is hardware implementation dependent. `0` : ganged switching `1` : individual switching

© 2022 Microchip Technology Inc. and its subsidiaries

5.1.8 REGISTER 07H: CONFIGURATION DATA BYTE 2

Bit Number	Bit Name	Description
7	DYNAMIC	Dynamic Power Enable: controls the ability of the hub to automatically change from self-powered to bus-powered operation if the local power source is removed or unavailable. It can also go from bus-powered to self-powered operation if the local power source is restored. When dynamic power switching is enabled, the hub detects the availability of a local power source by monitoring **LOCAL_PWR**. If the hub detects a change in power source availability, the hub immediately disconnects and removes power from all downstream devices. It also disconnects the upstream port. The hub will then re-attach to the upstream port as either a bus-powered hub (if local power is unavailable) or a self-powered hub (if local power is available). `0` : no dynamic auto-switching `1` : dynamic auto-switching capable
6	rsvd	
5:4	OC_TIMER	Over Current Timer Delay: `00` : 0.1 ms `01` : 4.0 ms `10` : 8.0 ms `11` : 16.0 ms
3	COMPOUND	Compound Device: indicates the hub is part of a compound device (see the *USB Specification* for definition). The applicable port(s) must also be defined as having a non-removable device. **Note:** When configured via strapping options, declaring a port as non-removable automatically causes the hub controller to report that it is part of a compound device. `0` : no `1` : yes, the hub is part of a compound device
2:0	rsvd	

5.1.9 REGISTER 08H: CONFIGURATION DATA BYTE 3

Bit Number	Bit Name	Description
7:4	rsvd	
3	PRTMAP_EN	Port Mapping Enable: selects the method used by the hub to assign port numbers and disable ports. `0` : standard mode `1` : port mapping mode
2:1	rsvd	
0	STRING_EN	Enables String Descriptor Support `0` : string support disabled `1` : string support enabled

5.1.10 REGISTER 09H: NON-REMOVABLE DEVICE

Bit Number	Bit Name	Description
7:0	NR_DEVICE	Non-Removable Device: indicates which port has a non-removable device. 0 : port is removable 1 : port is non-removable Bit 7 : rsvd Bit 6 : rsvd Bit 5 : rsvd Bit 4 : controls port 4 Bit 3 : controls port 3 Bit 2 : controls port 2 Bit 1 : controls port 1 Bit 0 : rsvd **Note:** The device must provide its own descriptor data. When using the default configuration, the **NON_REM[1:0]** pins will designate the appropriate ports as being non-removable.

5.1.11 REGISTER 0AH: PORT DISABLE FOR SELF-POWERED OPERATION

Bit Number	Bit Name	Description
7:0	PORT_DIS_SP	Port Disable Self-Powered: disables one or more ports. 0 = port is available 1 = port is disabled Bit 7 : rsvd Bit 6 : rsvd Bit 5 : rsvd Bit 4 : controls port 4 Bit 3 : controls port 3 Bit 2 : controls port 2 Bit 1 : controls port 1 Bit 0 : rsvd During self-powered operation when mapping mode is disabled (**PRTMAP_EN** = 0), this register selects the ports that will be permanently disabled. These ports are then unavailable and cannot be enabled or enumerated by a host controller. The ports can be disabled in any order, where the internal logic will automatically report the correct number of enabled ports to the USB host. The active ports will be reordered in order to ensure proper function. When using the default configuration, **PRT_DIS_P[x:1]** and **PRT_DIS_M[x:1]** pins disable the appropriate ports.

© 2022 Microchip Technology Inc. and its subsidiaries

5.1.12 REGISTER 0BH: PORT DISABLE FOR BUS-POWERED OPERATION

Bit Number	Bit Name	Description
7:0	PORT_DIS_BP	Port Disable Bus-Powered: disables one or more ports. `0` = port is available `1` = port is disabled Bit 7 : rsvd Bit 6 : rsvd Bit 5 : rsvd Bit 4 : controls port 4 Bit 3 : controls port 3 Bit 2 : controls port 2 Bit 1 : controls port 1 Bit 0 : rsvd During self-powered operation when mapping mode is disabled (**PRTMAP_EN** = 0), this selects the ports which will be permanently disabled.These ports are then unavailable and cannot be enabled or enumerated by a host controller. The ports can be disabled in any order, where the internal logic will automatically report the correct number of enabled ports to the USB host. The active ports will be reordered in order to ensure proper function. When using the internal default option, the **PRT_DIS_P[x:1]** and **PRT_DIS_M[x:1]** pins disable the appropriate ports.

5.1.13 REGISTER 0CH: MAX POWER FOR SELF-POWERED OPERATION

Bit Number	Bit Name	Description
7:0	MAX_PWR_SP	Max Power Self-Powered: the value in 2 mA increments that the hub consumes from an upstream port (VBUS) when operating as a self-powered hub. This value includes the hub silicon along with the combined power consumption (from VBUS) of all associated circuitry on the board. This value also includes the power consumption of a permanently attached peripheral if the hub is configured as a compound device. The embedded peripheral reports 0 mA in its descriptors. **Note:** The *USB 2.0 Specification* does not permit this value to exceed 100 mA

5.1.14 REGISTER 0DH: MAX POWER FOR BUS-POWERED OPERATION

Bit Number	Bit Name	Description
7:0	MAX_PWR_BP	Max Power Bus-Powered: the value in 2 mA increments that the hub consumes from an upstream port (VBUS) when operating as a bus-powered hub. This value includes the hub silicon along with the combined power consumption (from VBUS) of all associated circuitry on the board. This value also includes the power consumption of a permanently attached peripheral if the hub is configured as a compound device. The embedded peripheral reports 0 mA in its descriptors.

© 2022 Microchip Technology Inc. and its subsidiaries

5.1.15 REGISTER 0EH: HUB CONTROLLER MAX CURRENT FOR SELF-POWERED OPERATION

Bit Number	Bit Name	Description
7:0	HC_MAX_C_SP	Hub Controller Max Current Self-Powered: the value in 2 mA increments that the hub consumes from an upstream port (VBUS) when operating as a self-powered hub. This value includes the hub silicon along with the combined power consumption (from VBUS) of all associated circuitry on the board. This value does NOT include the power consumption of a permanently attached peripheral if the hub is configured as a compound device. **Note:** The *USB 2.0 Specification* does not permit this value to exceed 100 mA A value of 50 (decimal) indicates 100 mA, which is the default value.

5.1.16 REGISTER 0FH: HUB CONTROLLER MAX CURRENT FOR BUS-POWERED OPERATION

Bit Number	Bit Name	Description
7:0	HC_MAX_C_BP	Hub Controller Max Current Bus-Powered: the value in 2 mA increments that the hub consumes from an upstream port (VBUS) when operating as a bus-powered hub. This value will include the hub silicon along with the combined power consumption (from VBUS) of all associated circuitry on the board. **Note:** This value will not include the power consumption of a permanently attached peripheral if the hub is configured as a compound device. A value of 50 (decimal) would indicate 100 mA, which is the default value.

5.1.17 REGISTER 10H: POWER-ON TIME

Bit Number	Bit Name	Description
7:0	POWER_ON_TIME	Power-On Time: the length of time that it takes (in 2 ms intervals) from the time the host initiated the power-on sequence on a port until the port has adequate power.

5.1.18 REGISTER 11H: LANGUAGE ID HIGH

Bit Number	Bit Name	Description
7:0	LANG_ID_H	USB Language ID: upper 8 bits of a 16-bit ID field

5.1.19 REGISTER 12H: LANGUAGE ID LOW

Bit Number	Bit Name	Description
7:0	LANG_ID_L	USB Language ID: lower 8 bits of a 16-bit ID field

5.1.20 REGISTER 13H: MANUFACTURER STRING LENGTH

Bit Number	Bit Name	Description
7:0	MFR_STR_LEN	Manufacturer String Length: with a maximum string length of 31 characters (when supported).

© 2022 Microchip Technology Inc. and its subsidiaries

5.1.21 REGISTER 14H: PRODUCT STRING LENGTH

Bit Number	Bit Name	Description
7:0	PRD_STR_LEN	Product String Length: with a maximum string length of 31 characters (when supported).

5.1.22 REGISTER 15H: SERIAL STRING LENGTH

Bit Number	Bit Name	Description
7:0	SER_STR_LEN	Serial String Length: with a maximum string length of 31 characters (when supported).

5.1.23 REGISTER 16H-53H: MANUFACTURER STRING

Bit Number	Bit Name	Description
7:0	MFR_STR	Manufacturer String: UNICODE UTF-16LE per *USB 2.0 Specification*: with a maximum string length of 31 characters (when supported). **Note:** The string consists of individual 16-bit UNICODE UTF-16LE characters. The characters will be stored starting with the LSB at the least significant address and the MSB at the next 8-bit location. (Subsequent characters must be stored in sequential contiguous addresses in the same LSB, MSB manner.) **Warning:** Close attention to the byte order of the selected programming tool should be monitored.

5.1.24 REGISTER 54H-91H: PRODUCT STRING

Bit Number	Bit Name	Description
7:0	PRD_STR	Product String: UNICODE UTF-16LE per *USB 2.0 Specification* When supported, the maximum string length is 31 characters (62 bytes). **Note:** The string consists of individual 16-bit UNICODE UTF-16LE characters. The characters will be stored starting with the LSB at the least significant address and the MSB at the next 8-bit location. (Subsequent characters must be stored in sequential contiguous address in the same LSB, MSB manner.) **Warning:** Close attention to the byte order of the selected programming tool should be monitored.

5.1.25 REGISTER 92H-CFH: SERIAL STRING

Bit Number	Bit Name	Description
7:0	SER_STR	Serial String: UNICODE UTF-16LE per USB 2.0 specification When supported, the maximum string length is 31 characters (62 bytes). **Note:** The string consists of individual 16-bit UNICODE UTF-16LE characters. The characters will be stored starting with the LSB at the least significant address and the MSB at the next 8-bit location. (Subsequent characters must be stored in sequential contiguous address in the same LSB, MSB manner.) **Warning:** Close attention to the byte order of the selected programming tool should be monitored.

© 2022 Microchip Technology Inc. and its subsidiaries

5.1.26 REGISTER D0H: BATTERY CHARGING ENABLE

Bit Number	Bit Name	Description
7:0	BC_EN	Battery Charging Enable: enables the battery charging feature for the corresponding port. 0 : battery charging support is not enabled 1 : battery charging support is enabled Bit 7 : rsvd Bit 6 : rsvd Bit 5 : rsvd Bit 4 : controls port 4 Bit 3 : controls port 3 Bit 2 : controls port 2 Bit 1 : controls port 1 Bit 0 : rsvd

5.1.27 REGISTER F6H: BOOST_UP

Bit Number	Bit Name	Description
7:2	rsvd	
1:0	BOOST_IOUT	USB electrical signaling drive strength boost bit for the upstream port. 00 : normal electrical drive strength - no boost 01 : elevated electrical drive strength - low (~ 4% boost) 10 : elevated electrical drive strength - medium (~ 8% boost) 11 : elevated electrical drive strength - high (~12% boost) **Note:** Boost could result in non-USB compliant parameters. Therefore, a value of 00 should be implemented unless specific implementation issues require additional signal boosting to correct for degraded USB signalling levels.

© 2022 Microchip Technology Inc. and its subsidiaries

5.1.28 REGISTER F8H: BOOST_4:0

Bit Number	Bit Name	Description
7:6	BOOST_IOUT_4	USB electrical signaling drive strength boost bit for downstream port 4. 00 : normal electrical drive strength - no boost 01 : elevated electrical drive strength - low (~4% boost) 10 : elevated electrical drive strength - medium (~ 8% boost) 11 : elevated electrical drive strength - high (~12% boost)
5:4	BOOST_IOUT_3	USB electrical signaling drive strength boost bit for downstream port 3. 00 : normal electrical drive strength - no boost 01 : elevated electrical drive strength - low (~4% boost) 10 : elevated electrical drive strength - medium (~ 8% boost) 11 : elevated electrical drive strength - high (~12% boost)
3:2	BOOST_IOUT_2	USB electrical signaling drive strength boost bit for downstream port 2. 00 : normal electrical drive strength - no boost 01 : elevated electrical drive strength - low (~4% boost) 10 : elevated electrical drive strength - medium (~ 8% boost) 11 : elevated electrical drive strength - high (~12% boost)
1:0	BOOST_IOUT_1	USB electrical signaling drive strength boost bit for downstream port 1. 00 : normal electrical drive strength - no boost 01 : elevated electrical drive strength - low (~4% boost) 10 : elevated electrical drive strength - medium (~ 8% boost) 11 : elevated electrical drive strength - high (~12% boost)

Note: Boost could result in non-USB compliant parameters. Therefore, a value of 00 should be implemented unless specific implementation issues require additional signal boosting to correct for degraded USB signaling levels.

5.1.29 REGISTER FAH: PORT SWAP

Bit Number	Bit Name	Description
7:0	PRTSP	Port Swap: swaps the upstream USBDP/USBDM pins (**USBDP_UP** and **USBDM_UP**) and the downstream USBDP/USBDM pins (**USBDP_DN[x:1]** and **USBDP_DN[x:1]**) for ease of board routing to devices and connectors. 0 : USB D+ functionality is associated with the DP pin and D- functionality is associated with the DM pin. 1 : USB D+ functionality is associated with the DM pin and D- functionality is associated with the DP pin. Bit 7 : rsvd Bit 6 : rsvd Bit 5 : rsvd Bit 4 : controls port 4 Bit 3 : controls port 3 Bit 2 : controls port 2 Bit 1 : controls port 1 Bit 0 : when set to 1, the upstream port DP/DM is swapped.

5.1.30 REGISTER FBH: PORTMAP 12

Bit Number	Bit Name	Description
7:0	PRTR12	PortMap Register for Ports 1 and 2: When a hub is enumerated by a USB host controller, the hub is only permitted to report how many ports it has; the hub is not permitted to select a numerical range or assignment. The host controller will number the downstream ports of the hub starting with the number 1, up to the number of ports that the hub reports having. The host's port number is called the Logical Port Number and the physical port on the hub is the Physical Port Number. When mapping mode is enabled (see **PRTMAP_EN**, Section 5.1.9 on page 23) the hub's downstream port numbers can be mapped to different logical port numbers (assigned by the host). **Note:** Contiguous logical port numbers must be implemented, starting from number 1 up to the maximum number of enabled ports. This ensures that the hub's ports are numbered in accordance with the way a host will communicate with the ports.

Bit [7:4]	0000	Physical port 2 is disabled
	0001	Physical port 2 is mapped to logical port 1
	0010	Physical port 2 is mapped to logical port 2
	0011	Physical port 2 is mapped to logical port 3
	0100	Physical port 2 is mapped to logical port 4
	1000 to 1111	rsvd, will default to 0000 value
Bit [3:0]	0000	Physical port 1 is disabled
	0001	Physical port 1 is mapped to logical port 1
	0010	Physical port 1 is mapped to logical port 2
	0011	Physical port 1 is mapped to logical port 3
	0100	Physical port 1 is mapped to logical port 4
	1000 to 1111	rsvd, will default to 0000 value

© 2022 Microchip Technology Inc. and its subsidiaries

5.1.31 REGISTER FCH: PORTMAP 34

Bit Number	Bit Name	Description
7:0	PRTR34	PortMap Register for Ports 3 and 4: When a hub is enumerated by a USB host controller, the hub is only permitted to report how many ports it has; the hub is not permitted to select a numerical range or assignment. The host controller will number the downstream ports of the hub starting with the number 1, up to the number of ports that the hub reports having. The host's port number is called the Logical Port Number and the physical port on the hub is the Physical Port Number. When mapping mode is enabled (see **PRTMAP_EN**, Section 5.1.9 on page 23) the hub's downstream port numbers can be mapped to different logical port numbers (assigned by the host). **Note:** Contiguous logical port numbers must be implemented, starting from number 1 up to the maximum number of enabled ports. This ensures that the hub's ports are numbered in accordance with the way a host will communicate with the ports.

Bit [7:4]	0000	Physical port 4 is disabled
	0001	Physical port 4 is mapped to logical port 1
	0010	Physical port 4 is mapped to logical port 2
	0011	Physical port 4 is mapped to logical port 3
	0100	Physical port 4 is mapped to logical port 4
	1000 to 1111	rsvd, will default to 0000 value
Bit [3:0]	0000	Physical port 3 is disabled
	0001	Physical port 3 is mapped to logical port 1
	0010	Physical port 3 is mapped to logical port 2
	0011	Physical port 3 is mapped to logical port 3
	0100	Physical port 3 is mapped to logical port 4
	1000 to 1111	rsvd, will default to 0000 value

© 2022 Microchip Technology Inc. and its subsidiaries

5.1.32 REGISTER FFH: STATUS/COMMAND

Bit Number	Bit Name	Description
7:3	rsvd	
2	INTF_PW_DN	SMBus Interface Power Down: 0 : interface is active 1 : interface power down after ACK has completed
1	RESET	Reset the SMBus interface and internal memory back to **RESET_N** assertion default settings. 0 : normal run/idle state 1 : force a reset of registers to their default state
0	USB_ATTACH	USB Attach (and write protect) 0 : SMBus slave interface is active 1 : the hub will signal a USB attach event to an upstream device, and the internal memory (address range 0x00-0xFE) is write-protected to prevent unintentional data corruption.

5.2 I²C EEPROM

The hub can be configured via a 2-wire (I²C) EEPROM (256x8). See Table 5-1 for details on enabling the I²C EEPROM interface. The I²C EEPROM interface implements a subset of the *I²C Master Specification* (refer to the Philips Semiconductor Standard I²C-Bus Specification I²C protocol for details). The hub's interface is designed to attach to a single dedicated I²C EEPROM which conforms to the Standard-mode I²C specification (100 kbit/s transfer rate and 7-bit addressing) for protocol and electrical compatibility. The I²C EEPROM shares the same pins as the SMBus interface, therefore the SMBus interface is not available when the I²C EEPROM interface has been enabled (and vice versa).

The hub acts as the master and generates the serial clock **SCL**, controls the bus access (determines which device acts as the transmitter and which device acts as the receiver), and generates the START and STOP conditions. The hub will read the external EEPROM for configuration data and then attach to the upstream USB host.

Note: If no external EEPROM is present, the hub will write 0 to all configuration registers.

The hub does not have the capacity to write to the external EEPROM. The hub only has the capability to read from an external EEPROM. The external EEPROM will be read (even if it is blank), and the hub will be configured with the values that are read. Any values read for unsupported registers will not be retained (i.e., they will remain as the default values). Reserved registers should be set to 0 unless otherwise specified. EEPROM reset values are 0x00. Contents read from unavailable registers should be ignored.

5.2.1 I²C SLAVE ADDRESS

The 7-bit slave address is 1010000b.

Note: 10-bit addressing is not supported.

5.2.2 PROTOCOL IMPLEMENTATION

The hub will only access an EEPROM using the sequential read protocol as outlined in Chapter 8 of *MicroChip 24AA02/24LC02B* [4].

5.2.3 PULL-UP RESISTOR

The circuit board designer is required to place external pull-up resistors (10 kΩ recommended) on the **SDA/SMBDATA** and **SCL/SMBCLK/CFG_SEL[0]** lines (per *SMBus 1.0 Specification* [3], and EEPROM manufacturer guidelines) to **VDD33** in order to assure proper operation.

© 2022 Microchip Technology Inc. and its subsidiaries

5.2.4 IN-CIRCUIT EEPROM PROGRAMMING

The EEPROM can be programmed via automatic test equipment (ATE) by pulling **RESET_N** low (which tri-states the hub's EEPROM interface and allows an external source to program the EEPROM).

Note:	The Hub does not have the capacity to write, or "Program," an external EEPROM. The Hub only has the capability to read external EEPROMs. The external EEPROM will be read (even if it is blank or non-populated), and the Hub will be "configured" with the values that are read.

5.3 SMBus

The Microchip hub can be configured by an external processor via an SMBus interface (see Table 5-1 for details on enabling the SMBus interface). The SMBus interface shares the same pins as the EEPROM interface, and therefore the hub no longer supports the I^2C EEPROM interface when the SMBus interface has been enabled. The hub waits indefinitely for the SMBus code load to complete and only appears as a newly connected device on USB after the code load is complete.

The hub's SMBus acts as a slave-only SMBus device. The implementation only supports block write (Section 5.3.2.1) and block read (Section 5.3.2.2) protocols, where the available registers are outlined in Section 5.1 on page 19. Reference the *System Management Bus Specification* [3] for additional information.

5.3.1 SMBUS SLAVE ADDRESS

The 7-bit slave address is 0101100b. The hub will not respond to the general call address of 0000000b.

5.3.2 PROTOCOL IMPLEMENTATION

Typical block write and block read protocols are shown in figures 5-2 and 5-3. Register accesses are performed using 7-bit slave addressing, an 8-bit register address field, and an 8-bit data field. The shading shown in the figures during a read or write indicates the hub is driving data on the **SMBDATA** line; otherwise, host data is on the **SDA/SMBDATA** line.

The SMBus slave address assigned to the hub (0101100b) allows it to be identified on the SMBus. The register address field is the internal address of the register to be accessed. The register data field is the data that the host is attempting to write to the register or the contents of the register that the host is attempting to read.

Note:	Data bytes are transferred MSB first.

5.3.2.1 Block Write/Read

The block write begins with a slave address and a write condition. After the command code, the host issues a byte count which describes how many more bytes will follow in the message. If a slave had 20 bytes to send, the first byte would be the number 20 (14h), followed by the 20 bytes of data. The byte count may not be zero. A block write or read allows a transfer maximum of 32 data bytes.

Note: For the following SMBus tables:

Denotes Master-to-Slave Denotes Slave-to-Master

TABLE 5-2: BLOCK WRITE

1	7	1	1	8	1	
S	Slave Address	Wr	A	Register Address	A	...

8	1	8	1	8	1		8	1	1
Byte Count = N	A	Data byte 1	A	Data byte 2	A		Data byte N	A	P

5.3.2.2 Block Read

A block read differs from a block write in that the repeated start condition exists to satisfy the I^2C specification's requirement for a change in the transfer direction.

TABLE 5-3: BLOCK READ

1	7	1	1	8	1	1	7	1	1	
S	Slave Address	Wr	A	Register Address	A	S	Slave Address	Rd	A	...

8	1	8	1	8	1		8	1	1
Byte Count = N	A	Data byte 1	A	Data byte 2	A		Data byte N	A	P

5.3.2.3 Invalid Protocol Response Behavior

Note that any attempt to update registers with an invalid protocol will not be updated. The only valid protocols are write block and read block (described above), where the hub only responds to the 7-bit hardware selected slave address (0101100b). Also, the only valid registers for the hub are outlined in Section 5.1 on page 19. Attempts to access any other registers will return no response.

5.3.3 SLAVE DEVICE TIMEOUT

Devices in a transfer can abort the transfer in progress and release the bus when any single clock low interval exceeds 25 ms ($T_{TIMEOUT, MIN}$). The master must detect this condition and generate a stop condition within or after the transfer of the interrupted data byte. Slave devices must reset their communication and be able to receive a new START condition no later than 35 ms ($T_{TIMEOUT, MAX}$).

Note: Some simple devices do not contain a clock low drive circuit; this simple kind of device typically resets its communications port after a start or stop condition. The slave device timeout must be implemented.

© 2022 Microchip Technology Inc. and its subsidiaries

5.3.4 STRETCHING THE SCLK SIGNAL

The hub supports stretching of the **SCLK** by other devices on the SMBus. However, the hub does not stretch the **SCLK**.

5.3.5 SMBUS TIMING

The SMBus slave interface complies with the *SMBus Specification Revision 1.0* [3]. See Section 2.1, *AC Specifications* on page 3 for more information.

5.3.6 BUS RESET SEQUENCE

The SMBus slave interface resets and returns to the idle state upon a START condition followed immediately by a STOP condition.

5.3.7 SMBUS ALERT RESPONSE ADDRESS

The SMBALERT# signal is not supported by the hub.

5.4 Default Configuration

To put the hub in the default configuration, strap **CFG_SEL[1:0]** to 00b. This procedure configures the hub to the internal defaults and enables the strapping options. To place the hub in default configuration with overrides, see Table 5-1 on page 19 for the list of the options.

The internal default values are used for the registers that are not controlled by strapping option pins. Refer to Section 5.1 on page 19 for the internal default values that are loaded when this option is selected. For a list of strapping option pins, see Section 5.0, "Initial Interface/Configuration Options", and to configure the strapping pins, see Section 3.3.1 on page 14.

5.5 Reset

The hub experiences the following two resets:

- Hardware reset via the **RESET_N** pin
- USB bus reset

5.5.1 EXTERNAL HARDWARE RESET_N

A valid hardware reset is defined as assertion of **RESET_N** for a minimum of 1 µs after all power supplies are within operating range. While reset is asserted, the hub (and its associated external circuitry) consumes less than 500 µA of current from the upstream USB power source.

Assertion of **RESET_N** causes the following:

1. All downstream ports are disabled, and **PRTPWR[x:1]** to downstream devices is removed (unless **BC_EN[x:1]** is enabled).
2. The PHYs are disabled, and the differential pairs will be in a high-impedance state.
3. All transactions immediately terminate; no states are saved.
4. All internal registers return to the default state (in most cases, 00h).
5. The external crystal oscillator is halted.
6. The PLL is halted.

The hub is operational 500 µs after **RESET_N** is negated. Once operational, the hub will do one of the following, depending on configuration:

- Read the strapping pins (default configuration with strapping options enabled)
- Read configuration information from the external I^2C EEPROM
- Wait for configuration over SMBus.

5.5.1.1 RESET_N for Strapping Option Configuration

FIGURE 5-1: RESET_N TIMING FOR DEFAULT CONFIGURATION

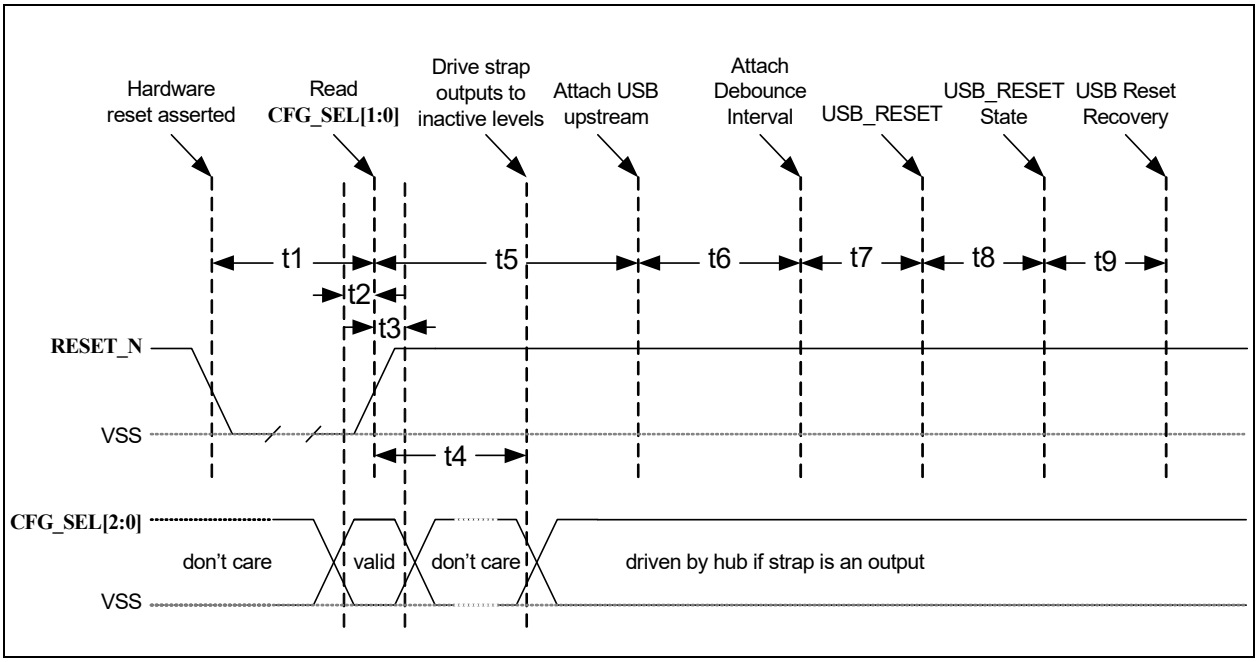

Name	Description	MIN	TYP	MAX	Units
t1	**RESET_N** asserted	1			µs
t2	**CFG_SEL[1:0]** setup time	16.7			ns
t3	**CFG_SEL[1:0]** hold time	16.7		1400	ns
t4	Hub outputs driven to inactive logic states		1.5	2	µs
t5	USB attach (see notes)		3		µs
t6	Host acknowledges attach and signals USB reset	100			ms
t7	USB_RESET		Host Defined		ms
t8	USB_RESET State	Note 5-1			ms
t9	USB Reset Recovery	10			ms

Note:

- When in bus-powered mode, the hub and its associated circuitry must not consume more than 100 mA from the upstream USB power source during t1+t5.
- All power supplies must have reached the operating levels mandated in Section 6.0, "DC Parameters", prior to (or coincident with) the assertion of **RESET_N**.

Note 5-1 10 ms for hubs, 50 ms for root ports.

© 2022 Microchip Technology Inc. and its subsidiaries

5.5.1.2 RESET_N for EEPROM Configuration

FIGURE 5-2: RESET_N TIMING FOR EEPROM MODE

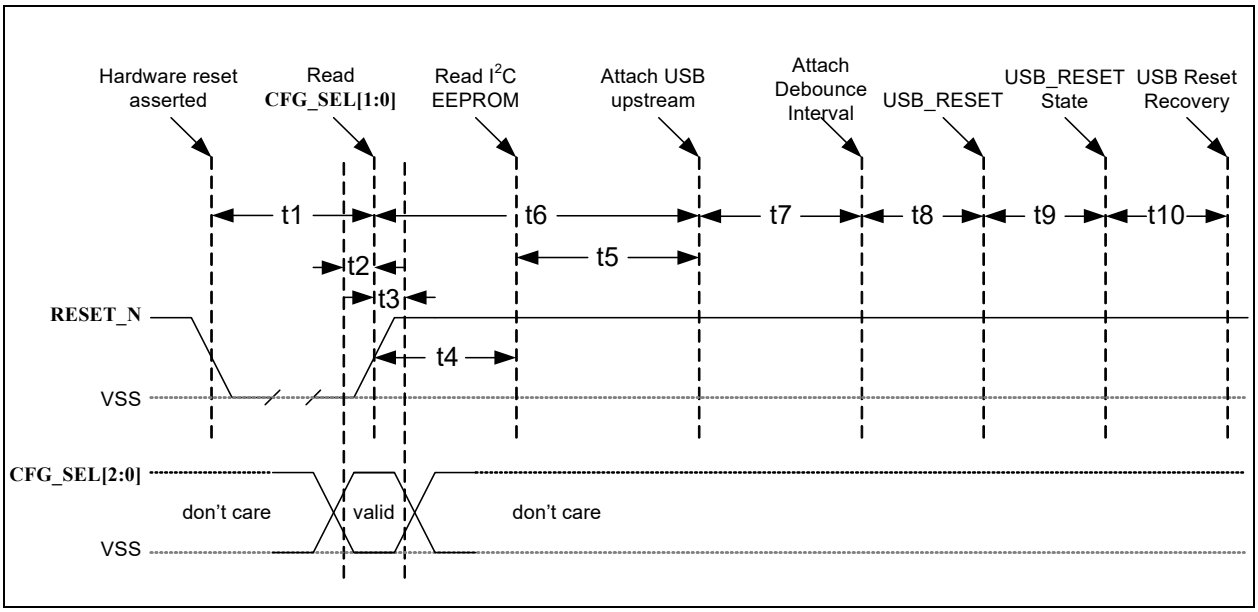

Name	Description	MIN	TYP	MAX	Units
t1	**RESET_N** asserted	1			µs
t2	**CFG_SEL[1:0]** setup time	16.7			ns
t3	**CFG_SEL[1:0]** hold time	16.7		1400	ns
t4	Hub recovery/stabilization			500	µs
t5	EEPROM read (hub configuration)		40		ms
t6	USB attach (see notes)		40		ms
t7	Host acknowledges attach and signals USB reset	100			ms
t8	USB_RESET		host-defined		ms
t9	USB_RESET state	Note 5-2			ms
t10	USB Reset Recovery	10			ms

Note:

- When in bus-powered mode, the hub and its associated circuitry must not consume more than 100 mA from the upstream USB power source during t6+t7+t8+t9.
- All power supplies must have reached the operating levels mandated in Section 6.0, "DC Parameters", prior to (or coincident with) the assertion of **RESET_N**.

Note 5-2 10 ms for hubs, 50 ms for root ports.

5.5.1.3 RESET_N for SMBus Slave Configuration

FIGURE 5-3: RESET_N TIMING FOR SMBUS MODE

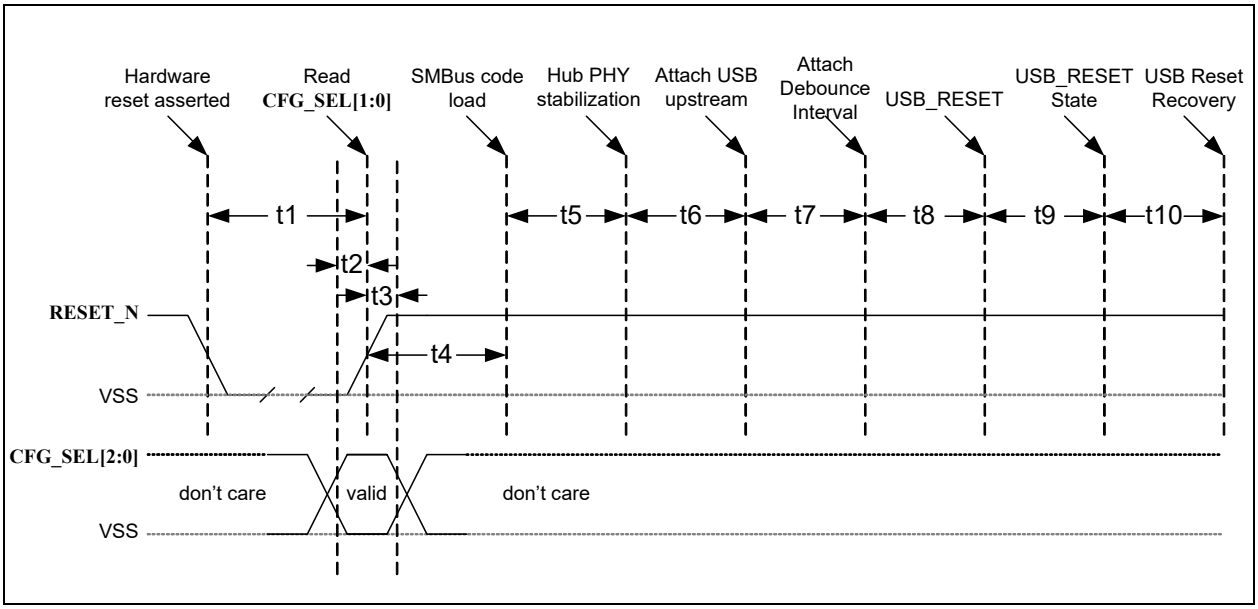

Name	Description	MIN	TYP	MAX	Units
t1	**RESET_N** Asserted	1			µs
t2	**CFG_SEL[1:0]** setup time	16.7			ns
t3	**CFG_SEL[1:0]** hold time	16.7		1400	ns
t4	Hub recovery/stabilization			500	µs
t5	SMBus Code Load	2		1000	ms
t6	Hub configuration and USB attach		0		ms
t7	Host acknowledges attach and signals USB reset	100			ms
t8	USB_RESET		host-defined		ms
t9	USB_RESET State	Note 5-4			ms
t10	USB Reset Recovery	10			ms

Note 5-3 All power supplies must have reached the operating levels mandated in Section 6.0, "DC Parameters", prior to (or coincident with) the assertion of **RESET_N**.

Note 5-4 10 ms for hubs, 50 ms for root ports.

5.5.2 USB BUS RESET

In response to the upstream port signaling a reset to the hub, the hub does the following:

1. Sets default internal USB address to 0
2. Sets configuration to: unconfigured
3. Negates **PRTPWR[x:1]** to all downstream ports unless battery charging (**BC_EN[x:1]**) is enabled
4. Clears all TT buffers
5. Moves device from suspended to active (if suspended)
6. Complies with Section 11.10 of the *USB 2.0 Specification* [1] for behavior after completion of the reset sequence. The host then configures the hub and the hub's downstream port devices in accordance with the *USB Specification*.

Note: The hub does not propagate the upstream USB reset to downstream devices.

© 2022 Microchip Technology Inc. and its subsidiaries

6.0 DC PARAMETERS

6.1 Maximum Ratings

Parameter	Symbol	MIN	MAX	Units	Comments
Storage Temperature	T_{STOR}	-55	150	°C	
Lead Temperature					Refer to *JEDEC Specification J-STD-020D* [5]
3.3 V supply voltage	VDD33 VDDA33		4.6	V	Applies to all packages
Voltage on any I/O pin		-0.5	5.5	V	
Voltage on **XTALIN**		-0.5	4.0	V	
Voltage on **XTALOUT**		-0.5	2.5	V	

Note 6-1

- Stresses above the specified parameters could cause permanent damage to the device. This is a stress rating only. Therefore, functional operation of the device at any condition above those indicated in the operation sections of this specification are not implied.
- When powering this device from laboratory or system power supplies, it is important that the absolute maximum ratings not be exceeded or device failure can result. Some power supplies exhibit voltage spikes on their outputs when the AC power is switched on or off. In addition, voltage transients on the AC power line may appear on the DC output. When this possibility exists, it is suggested that a clamp circuit be used.

6.2 Operating Conditions

Parameter	Symbol	MIN	MAX	Units	Comments
Extended Commercial Operating Temperature	T_{AE}	0	85	°C	Ambient temperature in still air
Industrial Operating Temperature	T_{AI}	-40	85	°C	Ambient temperature in still air Only applies to USB251xBi products
3.3 V supply voltage	VDD33 VDDA33	3.0	3.6	V	Applies to all parts
3.3 V supply rise time	t_{RT33}	0	400	µs	See Figure 6-1 and Note 6-2
Voltage on any I/O pin		-0.3	5.5	V	If any 3.3 V supply voltage drops below 3.0 V, then the MAX becomes: (3.3 V supply voltage) + 0.5
Voltage on **XTALIN**		-0.3	VDD33	V	

FIGURE 6-1: SUPPLY RISE TIME MODEL

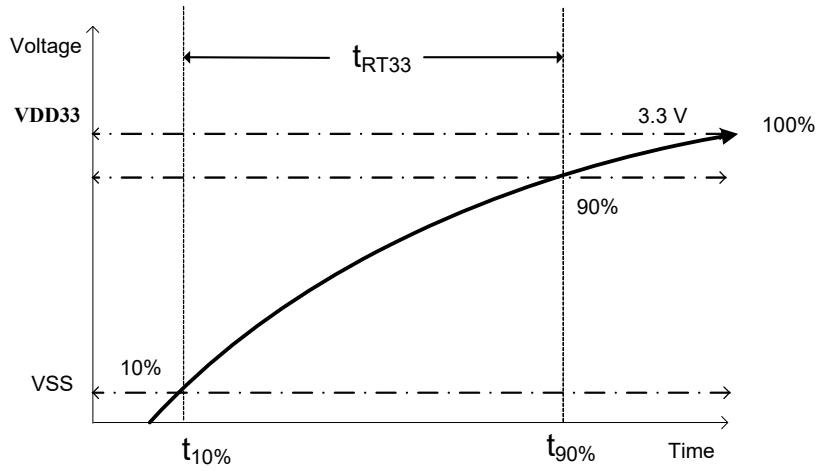

Note 6-2 The rise time for the 3.3 V supply can be extended to 100 ms max if RESET_N is actively driven low, typically by another IC, until 1 µs after all supplies are within operating range.

TABLE 6-1: DC ELECTRICAL CHARACTERISTICS

Parameter	Symbol	MIN	TYP	MAX	Units	Comments
I, IS Type Input Buffer						
Low Input Level	V_{ILI}			0.8	V	TTL Levels
High Input Level	V_{IHI}	2.0			V	
Input Leakage	I_{IL}	-10		+10	µA	V_{IN} = 0 to **VDD33**
Hysteresis (IS only)	V_{HYSI}	250		350	mV	
Input Buffer with Pull-Up (IPU)						
Low Input Level	V_{ILI}			0.8	V	TTL Levels
High Input Level	V_{IHI}	2.0			V	
Low Input Leakage	I_{ILL}	+35		+90	µA	V_{IN} = 0
High Input Leakage	I_{IHL}	-10		+10	µA	V_{IN} = **VDD33**
Input Buffer with Pull-Down (IPD)						
Low Input Level	V_{ILI}			0.8	V	TTL Levels
High Input Level	V_{IHI}	2.0			V	
Low Input Leakage	I_{ILL}	+10		-10	µA	V_{IN} = 0
High Input Leakage	I_{IHL}	-35		-90	µA	V_{IN} = **VDD33**
USB251xB/xBi ICLK Input Buffer						
Low Input Level	V_{ILCK}			0.3	V	
High Input Level	V_{IHCK}	0.9			V	
Input Leakage	I_{IL}	-10		+10	µA	V_{IN} = 0 to **VDD33**

© 2022 Microchip Technology Inc. and its subsidiaries

TABLE 6-1: DC ELECTRICAL CHARACTERISTICS (CONTINUED)

Parameter	Symbol	MIN	TYP	MAX	Units	Comments
O12, I/O12 & I/OSD12 Type Buffer						
Low Output Level	V_{OL}			0.4	V	I_{OL} = 12 mA @ **VDD33** = 3.3 V
High Output Level	V_{OH}	2.4			V	I_{OH} = -12 mA @ **VDD33** = 3.3 V
Output Leakage	I_{OL}	-10		+10	µA	
Hysteresis (SD pad only)	I_{HYSC}	250		350	mV	V_{IN} = **VDD33** (Note 6-1)

Note 6-3 Output leakage is measured with the current pins in high impedance.

Note 6-4 See *USB 2.0 Specification* [1] for USB DC electrical characteristics.

TABLE 6-2: SUPPLY CURRENT UNCONFIGURED: HI-SPEED HOST ($I_{CCINTHS}$)

Part	MIN	TYP	MAX	Units	Comments
USB2512B/12Bi		40	45	mA	
USB2513B/13Bi		40	45	mA	
USB2514B/14Bi		45	50	mA	

TABLE 6-3: SUPPLY CURRENT UNCONFIGURED: FULL-SPEED HOST ($I_{CCINTFS}$)

Part	MIN	TYP	MAX	Units	Comments
USB2512B/12Bi		35	40	mA	
USB2513B/13Bi		35	40	mA	
USB2514B/14Bi		35	40	mA	

TABLE 6-4: SUPPLY CURRENT CONFIGURED: HI-SPEED HOST (I_{HCH1})

Part	MIN	TYP	MAX	Units	Comments
USB2512B		60	65	mA	This is the base current of one downstream port.
USB2512Bi		60	70	mA	
USB2513B		65	70	mA	
USB2513Bi		65	75	mA	
USB2514B		70	80	mA	
USB2514Bi		70	85	mA	
USB251xB/xBi Supply Current Configured ***Hi-Speed Host*, each additional downstream port**		**1 port base + 25 mA**	**1 port base + 25 mA**	mA	

TABLE 6-5: SUPPLY CURRENT CONFIGURED: FULL-SPEED HOST (I_{FCC1})

Part	MIN	TYP	MAX	Units	Comments
USB2512B		45	50	mA	Base current of one downstream port
USB2512Bi		45	55	mA	
USB2513B		50	55	mA	
USB2513Bi		50	60	mA	
USB2514B		50	60	mA	
USB2514Bi		50	65	mA	
USB251xB/xBi Supply Current Configured *Full-Speed Host*, each additional downstream port		**1 port base + 8 mA**	**1 port base + 8 mA**	mA	

TABLE 6-6: SUPPLY CURRENT SUSPEND (I_{CSBY})

Part	MIN	TYP	MAX	Units	Comments
USB2512B		475	1000	µA	All supplies combined
USB2512Bi		475	1200	µA	
USB2513B		500	1100	µA	
USB2513Bi		500	1300	µA	
USB2514B		550	1200	µA	
USB2514Bi		550	1500	µA	

TABLE 6-7: SUPPLY CURRENT RESET (I_{CRST})

Part	MIN	TYP	MAX	Units	Comments
USB2512B		550	1100	µA	All supplies combined
USB2512Bi		550	1250	µA	
USB2513B		650	1200	µA	
USB2513Bi		650	1400	µA	
USB2514B		750	1400	µA	
USB2514Bi		750	1600	µA	

TABLE 6-8: PIN CAPACITANCE

Parameter	Symbol	Limits			Unit	Test Condition
		MIN	TYP	MAX		
Clock Input Capacitance	C_{XTAL}			6	pF	All pins except USB pins and the pins under the test tied to AC ground
Input Capacitance	C_{IN}			6	pF	(Note 6-5)
Output Capacitance	C_{OUT}			6	pF	

Note 6-5 Capacitance T_A = 25°C; fc = 1 MHz; VDD33 = 3.3 V

© 2022 Microchip Technology Inc. and its subsidiaries

6.2.1 PACKAGE THERMAL SPECIFICATIONS

Thermal parameters are measured or estimated for devices with the exposed pad soldered to thermal vias in a multi-layer 2S2P PCB per JESD51. Thermal resistance is measured from the die to the ambient air. The values provided are based on the package body, die size, maximum power consumption, 85°C ambient temperature, and 125°C junction temperature of the die.

Symbol	USB2512B/12Bi USB2513B/13Bi USB2514B/14Bi (°C/W)	Velocity (meters/s)
Θ_{JA}	40.1	0
	35.0	1
Ψ_{JT}	0.5	0
	0.7	1
Θ_{JC}	6.3	0
	6.3	1

Use the following formulas to calculate the junction temperature:

$$T_J = P \times \Theta_{JA} + T_A$$

$$T_J = P \times \Psi_{JT} + T_T$$

$$T_J = P \times \Theta_{JC} + T_C$$

$$\text{Max Power Supported} = (T_{J\ Max.\ Spec.} - T_{Amb.}) / \Theta_{JA}$$

TABLE 6-9: LEGEND

Symbol	Description
T_J	Junction temperature
P	Power dissipated
Θ_{JA}	Junction-to-ambient-temperature
Θ_{JC}	Junction-to-top-of-package
Ψ_{JT}	Junction-to-bottom-of-case
T_A	Ambient temperature
T_C	Temperature of the bottom of the case
T_T	Temperature of the top of the case

7.0 AC SPECIFICATIONS

7.1 Oscillator/Crystal

Crystal: Parallel resonant, fundamental mode, 24 MHz ±350 ppm.

Note: The USB251xB/xBi contains an internal 1 MΩ resistor between the **XTALIN** and **XTALOUT** pins.

FIGURE 7-1: TYPICAL CRYSTAL CIRCUIT

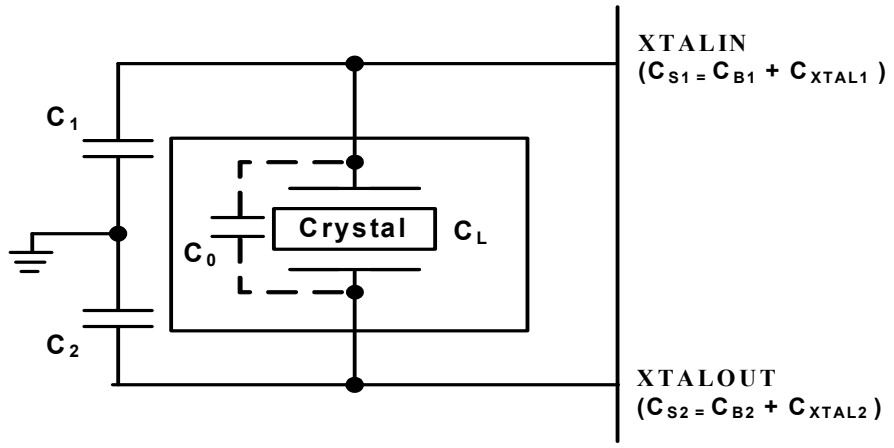

TABLE 7-1: CRYSTAL CIRCUIT LEGEND

Symbol	Description	In Accordance with
C_0	Crystal shunt capacitance	Crystal manufacturer's specification (Note 7-1)
C_L	Crystal load capacitance	
C_B	Total board or trace capacitance	OEM board design
C_S	Stray capacitance	Microchip IC and OEM board design
C_{XTAL}	XTAL pin input capacitance	Microchip IC
C_1	Load capacitors installed on OEM board	Calculated values based on Figure 7-2 (Note 7-2)
C_2		

FIGURE 7-2: FORMULA TO FIND THE VALUE OF C_1 AND C_2

$$C_1 = 2 \times (C_L - C_0) - C_{S1}$$

$$C_2 = 2 \times (C_L - C_0) - C_{S2}$$

Note 7-1 C_0 is usually included (subtracted by the crystal manufacturer) in the specification for C_L and should be set to 0 for use in the calculation of the capacitance formulas in Figure 7-2. However, the PCB itself may present a parasitic capacitance between **XTALIN** and **XTALOUT**. For an accurate calculation of C_1 and C_2, take the parasitic capacitance between traces **XTALIN** and **XTALOUT** into account.

Note 7-2 Each of these capacitance values is typically around 18 pF.

© 2022 Microchip Technology Inc. and its subsidiaries

7.2 External Clock

50% duty cycle ± 10%, 24 MHz ± 350 ppm, jitter < 100 ps rms.

The external clock is recommended to conform to the signaling level designated in the *JESD76-2 Specification* [5] on 1.2 V CMOS Logic. **XTALOUT** should be treated as a weak (<1mA) buffer output.

7.2.1 SMBUS INTERFACE

The hub conforms to all voltage, power, and timing characteristics and specifications as set forth in the *SMBus 1.0 Specification* [3] for slave-only devices (except as noted in Section 5.3, "SMBus," on page 33.

7.2.2 I^2C EEPROM

Clock frequency is fixed at 60 kHz ± 20%.

7.2.3 USB 2.0

The Microchip hub conforms to all voltage, power, and timing characteristics and specifications as set forth in the *USB 2.0 Specification* [1].

© 2022 Microchip Technology Inc. and its subsidiaries

8.0 PACKAGE MARKING INFORMATION

The following sub-sections detail the package marking information for the 36-pin SQFN and 36-pin QFN packages. To order or obtain information, e.g., on pricing or delivery, refer to the factory or the listed sales office.

8.1 36-Pin SQFN (Preferred)

36-Lead SQFN (6x6x0.9 mm)

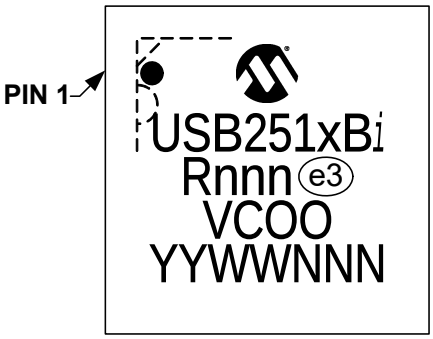

Example

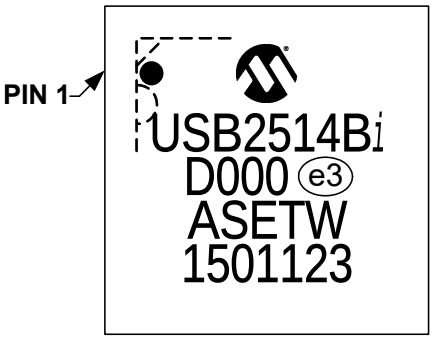

Legend:	x	USB251xB version (2 = 2-port, 3 = 3-port, 4 = 4-port)
	i	Temperature range designator (Blank = commercial, *i* = industrial)
	R	Product revision
	nnn	Internal code
	e3	Pb-free JEDEC® designator for Matte Tin (Sn)
	V	Plant of assembly
	COO	Country of origin
	YY	Year code (last two digits of calendar year)
	WW	Week code (week of January 1 is week ‘01’)
	NNN	Alphanumeric traceability code

Note: In the event the full Microchip part number cannot be marked on one line, it will be carried over to the next line, thus limiting the number of available characters for customer-specific information.

* Standard device marking consists of Microchip part number, year code, week code and traceability code. For device marking beyond this, certain price adders apply. Please check with your Microchip Sales Office. For QTP devices, any special marking adders are included in QTP price.

© 2022 Microchip Technology Inc. and its subsidiaries

8.2 36-Pin QFN (Legacy)

36-Lead QFN (6x6x0.9 mm)

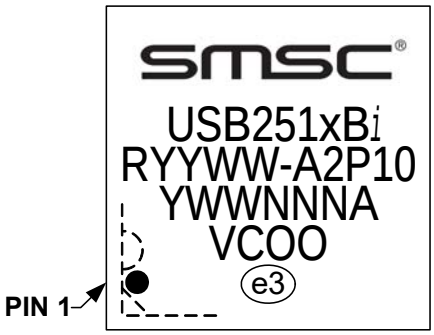

Example

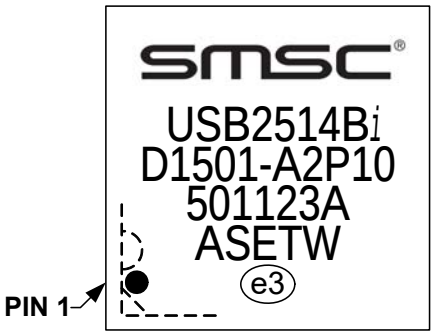

Legend:	x	USB251xB version (2 = 2-port, 3 = 3-port, 4 = 4-port)
	i	Temperature range designator: (Blank = commercial, *i* = industrial)
	R	Product revision
	YY	Year code (last two digits of calendar year)
	WW	Week code (week of January 1 is week ‘01’)
	A2P10	Internal code
	NNN	Alphanumeric traceability code
	A	Fixed character
	V	Plant of assembly
	COO	Country of origin
	e3	Pb-free JEDEC® designator for Matte Tin (Sn)

Note: In the event the full Microchip part number cannot be marked on one line, it will be carried over to the next line, thus limiting the number of available characters for customer-specific information.

* Standard device marking consists of Microchip part number, year code, week code and traceability code. For device marking beyond this, certain price adders apply. Please check with your Microchip Sales Office. For QTP devices, any special marking adders are included in QTP price.

9.0 PACKAGE INFORMATION

Note: For the most current package drawings, see the Microchip Packaging Specification at http://www.microchip.com/packaging.

9.1 36-Pin SQFN (Preferred)

FIGURE 9-1: 36-PIN SQFN PACKAGE DRAWING

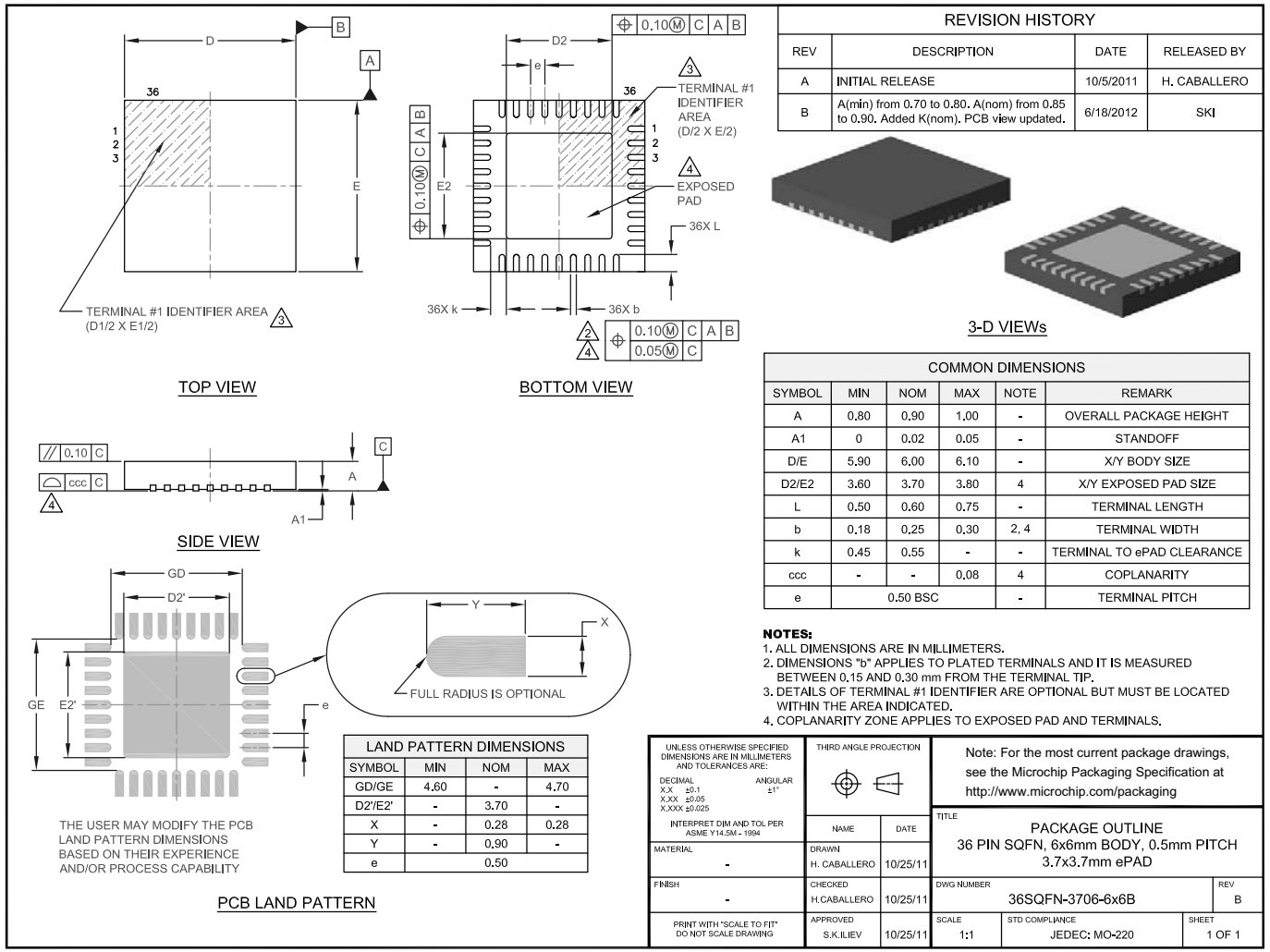

REVISION HISTORY

REV	DESCRIPTION	DATE	RELEASED BY
A	INITIAL RELEASE	10/5/2011	H. CABALLERO
B	A(min) from 0.70 to 0.80. A(nom) from 0.85 to 0.90. Added K(nom). PCB view updated.	6/18/2012	SKI

COMMON DIMENSIONS

SYMBOL	MIN	NOM	MAX	NOTE	REMARK
A	0.80	0.90	1.00	-	OVERALL PACKAGE HEIGHT
A1	0	0.02	0.05	-	STANDOFF
D/E	5.90	6.00	6.10	-	X/Y BODY SIZE
D2/E2	3.60	3.70	3.80	4	X/Y EXPOSED PAD SIZE
L	0.50	0.60	0.75	-	TERMINAL LENGTH
b	0.18	0.25	0.30	2, 4	TERMINAL WIDTH
k	0.45	0.55	-	-	TERMINAL TO ePAD CLEARANCE
ccc	-	-	0.08	4	COPLANARITY
e	0.50 BSC			-	TERMINAL PITCH

NOTES:
1. ALL DIMENSIONS ARE IN MILLIMETERS.
2. DIMENSIONS "b" APPLIES TO PLATED TERMINALS AND IT IS MEASURED BETWEEN 0.15 AND 0.30 mm FROM THE TERMINAL TIP.
3. DETAILS OF TERMINAL #1 IDENTIFIER ARE OPTIONAL BUT MUST BE LOCATED WITHIN THE AREA INDICATED.
4. COPLANARITY ZONE APPLIES TO EXPOSED PAD AND TERMINALS.

LAND PATTERN DIMENSIONS

SYMBOL	MIN	NOM	MAX
GD/GE	4.60	-	4.70
D2'/E2'	-	3.70	-
X	-	0.28	0.28
Y	-	0.90	-
e	0.50		

© 2022 Microchip Technology Inc. and its subsidiaries

9.2 36-Pin QFN (Legacy)

FIGURE 9-2: 36-PIN QFN PACKAGE DRAWING

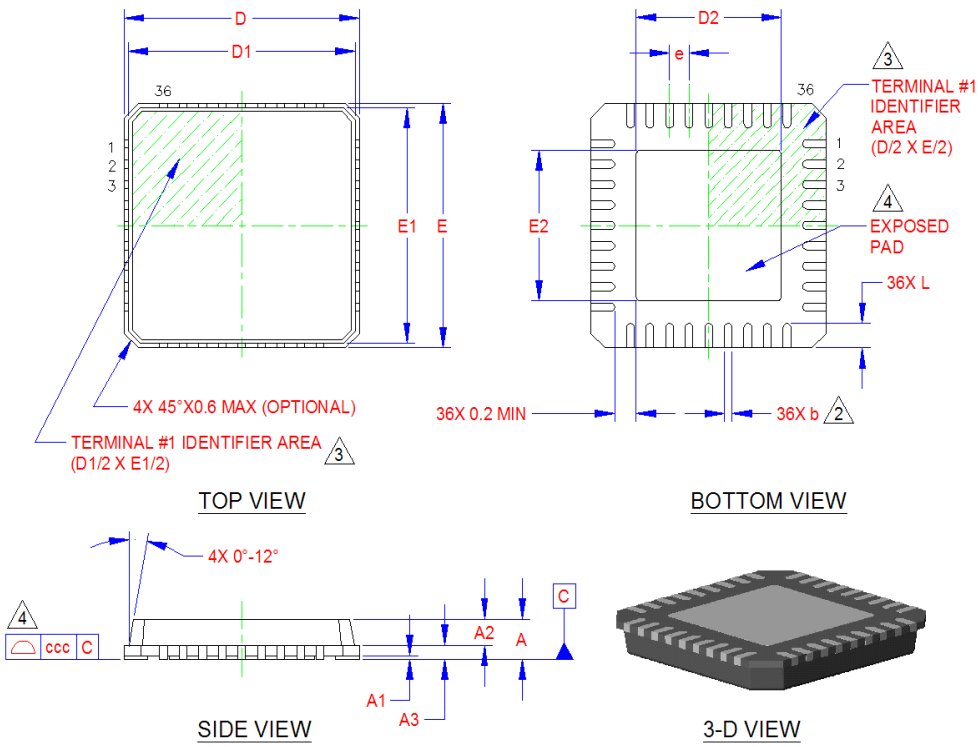

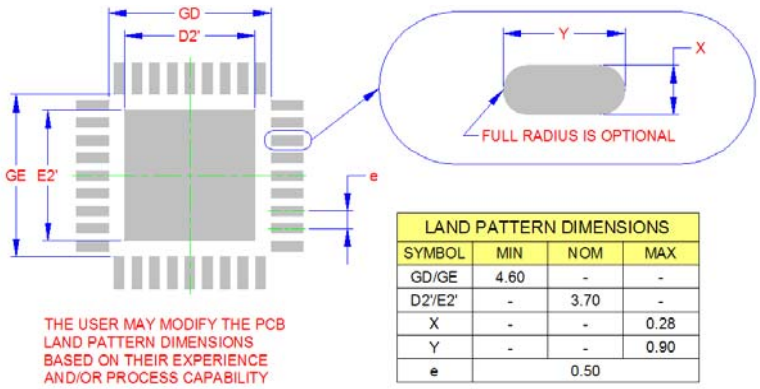

LAND PATTERN DIMENSIONS			
SYMBOL	MIN	NOM	MAX
GD/GE	4.60	-	-
D2'/E2'	-	3.70	-
X	-	-	0.28
Y	-	-	0.90
e		0.50	

RECOMMENDED PCB LAND PATTERN

COMMON DIMENSIONS					
SYMBOL	MIN	NOM	MAX	NOTE	REMARK
A	0.80	-	1.00	-	OVERALL PACKAGE HEIGHT
A1	0	0.02	0.05	-	STANDOFF
A2	0.60	-	0.80	-	MOLD CAP THICKNESS
A3	0.20 REF			-	LEADFRAME THICKNESS
D/E	5.85	6.00	6.15	-	X/Y BODY SIZE
D1/E1	5.55	-	5.95	-	X/Y MOLD CAP SIZE
D2/E2	3.55	3.70	3.85	2	X/Y EXPOSED PAD SIZE
L	0.50	0.60	0.75	-	TERMINAL LENGTH
b	0.18	0.25	0.30	2	TERMINAL WIDTH
e	0.50 BSC			-	TERMINAL PITCH

NOTES:

1. ALL DIMENSIONS ARE IN MILLIMETERS.
2. POSITION TOLERANCE OF EACH TERMINAL AND EXPOSED PAD IS ± 0.05mm AT MAXIMUM MATERIAL CONDITION. DIMENSIONS "b" APPLIES TO PLATED TERMINALS AND IT IS MEASURED BETWEEN 0.15 AND 0.30 mm FROM THE TERMINAL TIP.
3. DETAILS OF TERMINAL #1 IDENTIFIER ARE OPTIONAL BUT MUST BE LOCATED WITHIN THE AREA INDICATED.
4. COPLANARITY ZONE APPLIES TO EXPOSED PAD AND TERMINALS.

© 2022 Microchip Technology Inc. and its subsidiaries

APPENDIX A: ACRONYMS

I^2C: Inter-Integrated Circuit

OCS: Over-Current Sense

PCB: Printed Circuit Board

PHY: Physical Layer

PLL: Phase-Locked Loop

QFN: Quad Flat No Leads

RoHS: Restriction of Hazardous Substances Directive

SCL: Serial Clock

SIE: Serial Interface Engine

SMBus: System Management Bus

TT: Transaction Translator

© 2022 Microchip Technology Inc. and its subsidiaries

APPENDIX B: REFERENCES

1. Universal Serial Bus Specification, Version 2.0, April 27, 2000 (12/7/2000 and 5/28/2002 Errata)
   USB Implementers Forum, Inc. http://www.usb.org
2. I^2C-Bus Specification Version 1.1
   NXP (formerly a division of Philips). http://www.nxp.com
3. System Management Bus Specification, version 1.0
   SMBus. http://smbus.org/specs/
4. MicroChip 24AA02/24LC02B (Revision C)
   Microchip Technology Inc. http://www.microchip.com/
5. JEDEC Specifications: JESD76-2 (June 2001) and J-STD-020D.1 (March 2008)
   JEDEC Global Standards for the Microelectronics Industry. http://www.jedec.org/standards-documents

© 2022 Microchip Technology Inc. and its subsidiaries

APPENDIX C: DATA SHEET REVISION HISTORY

TABLE C-1: REVISION HISTORY

Revision Level & Date	Section/Figure/Entry	Correction
DS00001692D	Section 6.2.1, "Package Thermal Specifications"	Formula for max power dissipation updated.
DS00001692C (10-20-15)	Product Identification System	PIS ordering code information for preferred package corrected to align with current Microchip standard practices.
	Section 8.0, "Package Marking Information"	Top marking diagrams corrected to be consistent with internal specifications and current physical part markings.
DS00001692B (08-12-15)	All	Added new 36-SQFN package option information (drawings, ordering codes, top markings, etc.)
	Cover, Product Identification System	Updated document with new ordering section. Removed previous ordering section from cover.
	Section 8.0, "Package Marking Information"	Added new package marking chapter.
REV A	REV A replaces previous SMSC version Rev. 2.4 (11-08-13). Document is Microchip branded, mention of SMSC is removed. Order numbers modified adding “G” or “C” as last character to suffix. The following note added to Package Outline chapter: “For the most current package drawings, see the Microchip Packaging Specification at http://www.microchip.com/packaging.”	
Rev. 2.4 (11-08-13)	Section 5.2.1, "I^2C Slave Address"	Corrected slave address to “1010000b”.
	Figure 3-1, Figure 3-2, Figure 3-3, Table 3-1	Corrected pin 36 name (VDDA33).
	Section 5.5.1.1, "RESET_N for Strapping Option Configuration"	Updated timing diagram and values. Changed t6, t7, t8 name and added new t9. Updated t5 and 78 values.
	Section 5.5.1.2, "RESET_N for EEPROM Configuration"	Updated timing diagram and values. Changed t7, t8, and t9 name and added new t10. Updated t5, t6, and t9 values.
	Section 5.5.1.3, "RESET_N for SMBus Slave Configuration"	Updated timing diagram and values. Changed t7, t8, and t9 name and added new t10. Updated t5, t6, and t9 values. Removed t5 “bus” and “self” distinction.
	Note 6-2	Added note regarding 3.3 V supply rise time.
Rev. 2.3 (06-11-13)	Table 3-1, “USB251xB/xBi Pin List (Alphabetical),” on page 10	Corrected errant description “Server Message Block” to “System Management Bus”.
	Section 7.1, "Oscillator/Crystal," on page 44 and FIGURE 7-1: Typical Crystal Circuit on page 44	Updated figure to remove external 1 MΩ requirement. Added note indicating the device includes and internal1 MΩ resistor between the XTALIN and XTALOUT pins.
	FIGURE 3-3: USB2514B Pin Diagram on page 9	Corrected typo on pin 6.
	FIGURE 3-1: USB2512B Pin Diagram on page 7 & Table 3-1, “USB251xB/xBi Pin List (Alphabetical),” on page 10	Added alternate port disable functions to pins 1-4 of the USB2512B.
Rev. 2.2 (02-17-12)	Cover	Updated clock bullet to remove reference to 48MHz clock support.

© 2022 Microchip Technology Inc. and its subsidiaries

TABLE C-1: REVISION HISTORY (CONTINUED)

Revision Level & Date	Section/Figure/Entry	Correction
	Section 1.1, "Configurable Features," on page 4	Updated bulleted lists. USB signal drive strength, USB differential pair pin location and downstream port power control / over-current detection items moved from first (strap-configurable) bulleted list to the second (EEPROM-configurable) bulleted list. Added enabling of battery charging to the first bulleted list.
	Section 3.1, "Pin Configurations," on page 7	Clarified introductory sentence.
	Table 3-2, “USB251xB/xBi Pin Descriptions,” on page 12	Updated VBUS_DET buffer type to “I” and changed description to: “For self-powered applications with a permanently attached host, this pin must be connected to a dedicated host control output, or connected to the 3.3 V domain that powers the host (typically **VDD33**).”
	Table 3-2, “USB251xB/xBi Pin Descriptions,” on page 12	Updated CRFILT and PLLFILT pin descriptions.
	Section 7.1, "Oscillator/Crystal," on page 44	Removed redundant sentence: “External Clock: 50% duty cycle ± 10%, 24/48 MHz ± 350 ppm, jitter < 100 ps rms”. This information is provided in Section 7.2, "External Clock," on page 45.
	Section 7.0, "AC Specifications"	Removed ceramic resonator information.
	Section 7.2, "External Clock"	Replaced “1.8 V CMOS Logic” with “1.2 V CMOS Logic”. Updated XTALOUT description.
	Section 3.3, "Pin Descriptions (Grouped by Function)"	Updated CRFILT and PLLFILT pin descriptions.
	Cover, Package, All	Removed the 49-BGA option.
	Order Code Page	Changed ordering codes for non-industrial USB2513B and USB2514B. Last character was changed from “G” to “C”.
	Front page	Removed support for ceramic resonator.
Rev. 2.1 (02-22-11)	Section 6.2.1, *Package Thermal Specifications*	Added Max Power Supported = (**T**J, max.spec. - **T**amb)/ Θ**JA**
Rev. 2.0 (10-01-10)	All	General refresh, corrected grammatical errors and unified tone.

THE MICROCHIP WEB SITE

Microchip provides online support via our WWW site at www.microchip.com. This web site is used as a means to make files and information easily available to customers. Accessible by using your favorite Internet browser, the web site contains the following information:

- **Product Support** – Data sheets and errata, application notes and sample programs, design resources, user's guides and hardware support documents, latest software releases and archived software
- **General Technical Support** – Frequently Asked Questions (FAQ), technical support requests, online discussion groups, Microchip consultant program member listing
- **Business of Microchip** – Product selector and ordering guides, latest Microchip press releases, listing of seminars and events, listings of Microchip sales offices, distributors and factory representatives

CUSTOMER CHANGE NOTIFICATION SERVICE

Microchip's customer notification service helps keep customers current on Microchip products. Subscribers will receive e-mail notification whenever there are changes, updates, revisions or errata related to a specified product family or development tool of interest.

To register, access the Microchip web site at www.microchip.com. Under "Support", click on "Customer Change Notification" and follow the registration instructions.

CUSTOMER SUPPORT

Users of Microchip products can receive assistance through several channels:

- Distributor or Representative
- Local Sales Office
- Field Application Engineer (FAE)
- Technical Support

Customers should contact their distributor, representative or field application engineer (FAE) for support. Local sales offices are also available to help customers. A listing of sales offices and locations is included in the back of this document.

Technical support is available through the web site at: http://www.microchip.com/support

© 2022 Microchip Technology Inc. and its subsidiaries

PRODUCT IDENTIFICATION SYSTEM

The USB251xB/xBi is available in a 36-pin SQFN (preferred) and 36-pin QFN (legacy) package. For new designs, the 36-pin SQFN is recommended. The ordering code information varies dependent on the package selected. The following sub-sections detail the product identification system for the 36-pin SQFN (preferred) and 32-pin QFN (legacy). To order or obtain information, e.g., on pricing or delivery, refer to the factory or the listed sales office.

36-Pin SQFN (Preferred)

PART NO.	[X](1)	[-X]	/	XX
Device	Tape and Reel Option	Temperature Range		Package

Device:	USB2512B = 2-Port USB 2.0 Hub USB2513B = 3-Port USB 2.0 Hub USB2514B = 4-Port USB 2.0 Hub
Tape and Reel Option:	Blank = Standard packaging (tray) T = Tape and Reel (Note 1)
Temperature Range:	Blank = 0°C to +85°C (Extended Commercial) I = -40°C to +85°C (Industrial)
Package:	M2 = 36-pin SQFN

Examples:

a) USB2512B/M2
2-Port USB hub, Tray, Extended commercial temp, 36-pin SQFN

b) USB2514BT-I/M2
4-Port USB hub, Tape & reel, Industrial temp., 36-pin SQFN

Note 1: Reel size is 3,000 pieces. Tape and Reel identifier only appears in the catalog part number description. This identifier is used for ordering purposes and is not printed on the device package. Check with your Microchip Sales Office for package availability with the Tape and Reel option.

36-Pin QFN (Legacy)

Order Numbers*	ROHS Compliant Package	Package Size (mm)	Temperature Range
USB2512B-AEZG USB2513B-AEZC USB2514B-AEZC	36-QFN	6x6	0ºC to 85ºC
USB2512Bi-AEZG USB2513Bi-AEZG USB2514Bi-AEZG			-40ºC to 85ºC

* Add “-TR” to the end of any QFN order number to order tape and reel. Reel size is 3,000 pieces.

Note the following details of the code protection feature on Microchip products:

- Microchip products meet the specifications contained in their particular Microchip Data Sheet.
- Microchip believes that its family of products is secure when used in the intended manner, within operating specifications, and under normal conditions.
- Microchip values and aggressively protects its intellectual property rights. Attempts to breach the code protection features of Microchip product is strictly prohibited and may violate the Digital Millennium Copyright Act.
- Neither Microchip nor any other semiconductor manufacturer can guarantee the security of its code. Code protection does not mean that we are guaranteeing the product is “unbreakable”. Code protection is constantly evolving. Microchip is committed to continuously improving the code protection features of our products.

This publication and the information herein may be used only with Microchip products, including to design, test, and integrate Microchip products with your application. Use of this information in any other manner violates these terms. Information regarding device applications is provided only for your convenience and may be superseded by updates. It is your responsibility to ensure that your application meets with your specifications. Contact your local Microchip sales office for additional support or, obtain additional support at https://www.microchip.com/en-us/support/design-help/client-support-services.

THIS INFORMATION IS PROVIDED BY MICROCHIP "AS IS". MICROCHIP MAKES NO REPRESENTATIONS OR WAR- RANTIES OF ANY KIND WHETHER EXPRESS OR IMPLIED, WRITTEN OR ORAL, STATUTORY OR OTHERWISE, RELATED TO THE INFORMATION INCLUD- ING BUT NOT LIMITED TO ANY IMPLIED WARRANTIES OF NON- INFRINGEMENT, MERCHANTABILITY, AND FITNESS FOR A PARTICULAR PURPOSE, OR WARRANTIES RELATED TO ITS CONDITION, QUALITY, OR PERFORMANCE.

IN NO EVENT WILL MICROCHIP BE LIABLE FOR ANY INDI- RECT, SPECIAL, PUNITIVE, INCIDENTAL, OR CONSEQUENTIAL LOSS, DAM- AGE, COST, OR EXPENSE OF ANY KIND WHATSOEVER RELATED TO THE INFORMATION OR ITS USE, HOWEVER CAUSED, EVEN IF MICROCHIP HAS BEEN ADVISED OF THE POSSIBILITY OR THE DAMAGES ARE FORESEEABLE. TO THE FULLEST EXTENT ALLOWED BY LAW, MICROCHIP'S TOTAL LIABILITY ON ALL CLAIMS IN ANY WAY RELATED TO THE INFORMATION OR ITS USE WILL NOT EXCEED THE AMOUNT OF FEES, IF ANY, THAT YOU HAVE PAID DIRECTLY TO MICROCHIP FOR THE INFORMATION.

Use of Microchip devices in life support and/or safety applications is entirely at the buyer's risk, and the buyer agrees to defend, indemnify and hold harmless Microchip from any and all damages, claims, suits, or expenses resulting from such use. No licenses are conveyed, implicitly or otherwise, under any Microchip intellectual property rights unless otherwise stated.

Trademarks

The Microchip name and logo, the Microchip logo, Adaptec, AnyRate, AVR, AVR logo, AVR Freaks, BesTime, BitCloud, CryptoMemory, CryptoRF, dsPIC, flexPWR, HELDO, IGLOO, JukeBlox, KeeLoq, Kleer, LANCheck, LinkMD, maXStylus, maXTouch, MediaLB, megaAVR, Microsemi, Microsemi logo, MOST, MOST logo, MPLAB, OptoLyzer, PIC, picoPower, PICSTART, PIC32 logo, PolarFire, Prochip Designer, QTouch, SAM-BA, SenGenuity, SpyNIC, SST, SST Logo, SuperFlash, Symmetricom, SyncServer, Tachyon, TimeSource, tinyAVR, UNI/O, Vectron, and XMEGA are registered trademarks of Microchip Technology Incorporated in the U.S.A. and other countries.

AgileSwitch, APT, ClockWorks, The Embedded Control Solutions Company, EtherSynch, Flashtec, Hyper Speed Control, HyperLight Load, IntelliMOS, Libero, motorBench, mTouch, Powermite 3, Precision Edge, ProASIC, ProASIC Plus, ProASIC Plus logo, Quiet- Wire, SmartFusion, SyncWorld, Temux, TimeCesium, TimeHub, TimePictra, TimeProvider, TrueTime, WinPath, and ZL are registered trademarks of Microchip Technology Incorporated in the U.S.A.

Adjacent Key Suppression, AKS, Analog-for-the-Digital Age, Any Capacitor, AnyIn, AnyOut, Augmented Switching, BlueSky, BodyCom, CodeGuard, CryptoAuthentication, CryptoAutomotive, CryptoCompanion, CryptoController, dsPICDEM, dsPICDEM.net, Dynamic Average Matching, DAM, ECAN, Espresso T1S, EtherGREEN, GridTime, IdealBridge, In-Circuit Serial Programming, ICSP, INICnet, Intelligent Paralleling, Inter-Chip Connectivity, JitterBlocker, Knob-on-Display, maxCrypto, maxView, memBrain, Mindi, MiWi, MPASM, MPF, MPLAB Certified logo, MPLIB, MPLINK, MultiTRAK, NetDetach, NVM Express, NVMe, Omniscient Code Generation, PICDEM, PICDEM.net, PICkit, PICtail, PowerSmart, PureSilicon, QMatrix, REAL ICE, Ripple Blocker, RTAX, RTG4, SAM-ICE, Serial Quad I/O, simpleMAP, SimpliPHY, SmartBuffer, SmartHLS, SMART-I.S., storClad, SQI, SuperSwitcher, SuperSwitcher II, Switchtec, SynchroPHY, Total Endurance, TSHARC, USBCheck, VariSense, VectorBlox, VeriPHY, ViewSpan, WiperLock, XpressConnect, and ZENA are trademarks of Microchip Technology Incorporated in the U.S.A. and other countries.

SQTP is a service mark of Microchip Technology Incorporated in the U.S.A.

The Adaptec logo, Frequency on Demand, Silicon Storage Technology, Symmcom, and Trusted Time are registered trademarks of Microchip Technology Inc. in other countries.

GestIC is a registered trademark of Microchip Technology Germany II GmbH & Co. KG, a subsidiary of Microchip Technology Inc., in other countries.

All other trademarks mentioned herein are property of their respective companies.

© 2022, Microchip Technology Incorporated and its subsidiaries.

All Rights Reserved.

ISBN: 9781668301425

For information regarding Microchip’s Quality Management Systems, please visit www.microchip.com/quality.

Worldwide Sales and Service

AMERICAS

Corporate Office
2355 West Chandler Blvd.
Chandler, AZ 85224-6199
Tel: 480-792-7200
Fax: 480-792-7277
Technical Support:
http://www.microchip.com/support
Web Address:
www.microchip.com

Atlanta
Duluth, GA
Tel: 678-957-9614
Fax: 678-957-1455

Austin, TX
Tel: 512-257-3370

Boston
Westborough, MA
Tel: 774-760-0087
Fax: 774-760-0088

Chicago
Itasca, IL
Tel: 630-285-0071
Fax: 630-285-0075

Dallas
Addison, TX
Tel: 972-818-7423
Fax: 972-818-2924

Detroit
Novi, MI
Tel: 248-848-4000

Houston, TX
Tel: 281-894-5983

Indianapolis
Noblesville, IN
Tel: 317-773-8323
Fax: 317-773-5453
Tel: 317-536-2380

Los Angeles
Mission Viejo, CA
Tel: 949-462-9523
Fax: 949-462-9608
Tel: 951-273-7800

Raleigh, NC
Tel: 919-844-7510

New York, NY
Tel: 631-435-6000

San Jose, CA
Tel: 408-735-9110
Tel: 408-436-4270

Canada - Toronto
Tel: 905-695-1980
Fax: 905-695-2078

ASIA/PACIFIC

Australia - Sydney
Tel: 61-2-9868-6733

China - Beijing
Tel: 86-10-8569-7000

China - Chengdu
Tel: 86-28-8665-5511

China - Chongqing
Tel: 86-23-8980-9588

China - Dongguan
Tel: 86-769-8702-9880

China - Guangzhou
Tel: 86-20-8755-8029

China - Hangzhou
Tel: 86-571-8792-8115

China - Hong Kong SAR
Tel: 852-2943-5100

China - Nanjing
Tel: 86-25-8473-2460

China - Qingdao
Tel: 86-532-8502-7355

China - Shanghai
Tel: 86-21-3326-8000

China - Shenyang
Tel: 86-24-2334-2829

China - Shenzhen
Tel: 86-755-8864-2200

China - Suzhou
Tel: 86-186-6233-1526

China - Wuhan
Tel: 86-27-5980-5300

China - Xian
Tel: 86-29-8833-7252

China - Xiamen
Tel: 86-592-2388138

China - Zhuhai
Tel: 86-756-3210040

ASIA/PACIFIC

India - Bangalore
Tel: 91-80-3090-4444

India - New Delhi
Tel: 91-11-4160-8631

India - Pune
Tel: 91-20-4121-0141

Japan - Osaka
Tel: 81-6-6152-7160

Japan - Tokyo
Tel: 81-3-6880- 3770

Korea - Daegu
Tel: 82-53-744-4301

Korea - Seoul
Tel: 82-2-554-7200

Malaysia - Kuala Lumpur
Tel: 60-3-7651-7906

Malaysia - Penang
Tel: 60-4-227-8870

Philippines - Manila
Tel: 63-2-634-9065

Singapore
Tel: 65-6334-8870

Taiwan - Hsin Chu
Tel: 886-3-577-8366

Taiwan - Kaohsiung
Tel: 886-7-213-7830

Taiwan - Taipei
Tel: 886-2-2508-8600

Thailand - Bangkok
Tel: 66-2-694-1351

Vietnam - Ho Chi Minh
Tel: 84-28-5448-2100

EUROPE

Austria - Wels
Tel: 43-7242-2244-39
Fax: 43-7242-2244-393

Denmark - Copenhagen
Tel: 45-4485-5910
Fax: 45-4485-2829

Finland - Espoo
Tel: 358-9-4520-820

France - Paris
Tel: 33-1-69-53-63-20
Fax: 33-1-69-30-90-79

Germany - Garching
Tel: 49-8931-9700

Germany - Haan
Tel: 49-2129-3766400

Germany - Heilbronn
Tel: 49-7131-72400

Germany - Karlsruhe
Tel: 49-721-625370

Germany - Munich
Tel: 49-89-627-144-0
Fax: 49-89-627-144-44

Germany - Rosenheim
Tel: 49-8031-354-560

Israel - Ra'anana
Tel: 972-9-744-7705

Italy - Milan
Tel: 39-0331-742611
Fax: 39-0331-466781

Italy - Padova
Tel: 39-049-7625286

Netherlands - Drunen
Tel: 31-416-690399
Fax: 31-416-690340

Norway - Trondheim
Tel: 47-7288-4388

Poland - Warsaw
Tel: 48-22-3325737

Romania - Bucharest
Tel: 40-21-407-87-50

Spain - Madrid
Tel: 34-91-708-08-90
Fax: 34-91-708-08-91

Sweden - Gothenberg
Tel: 46-31-704-60-40

Sweden - Stockholm
Tel: 46-8-5090-4654

UK - Wokingham
Tel: 44-118-921-5800
Fax: 44-118-921-5820

© 2022 Microchip Technology Inc. and its subsidiaries