**CMUDM8005**

**SURFACE MOUNT**
**P-CHANNEL**
**ENHANCEMENT-MODE**
**SILICON MOSFET**

ULTRAmini™

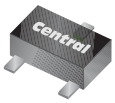


**SOT-523 CASE**

Central Semiconductor Corp.™

www.centralsemi.com

## DESCRIPTION:

The CENTRAL SEMICONDUCTOR CMUDM8005 is an Enhancement-mode P-Channel MOSFET, manufactured by the P-Channel DMOS Process, designed for high speed pulsed amplifier and driver applications. This MOSFET offers Low $r_{DS(ON)}$ and Low Theshold Voltage.

**MARKING CODE: 5C8**

## FEATURES:

- ESD Protection up to 2kV
- 300mW Power Dissipation
- Very Low $r_{DS(ON)}$
- Low Threshold Voltage
- Logic Level Compatible
- Small, SOT-523 Surface Mount Package

## APPLICATIONS:

- Load/Power Switches
- Power Supply Converter Circuits
- Battery Powered Portable Equipment

| **MAXIMUM RATINGS:** ($T_A$=25°C) | **SYMBOL** | | **UNITS** |
|---|---|---|---|
| Drain-Source Voltage | $V_{DS}$ | 20 | V |
| Gate-Source Voltage | $V_{GS}$ | 8.0 | V |
| Continuous Drain Current (Steady State - Note 1) | $I_D$ | 650 | mA |
| Continuous Source Current (Body Diode) | $I_S$ | 250 | mA |
| Maximum Pulsed Drain Current | $I_{DM}$ | 1.0 | A |
| Power Dissipation (Note 1) | $P_D$ | 300 | mW |
| Operating and Storage Junction Temperature | $T_J$, $T_{stg}$ | -65 to +150 | °C |

**ELECTRICAL CHARACTERISTICS:** ($T_A$=25°C unless otherwise noted)

| **SYMBOL** | **TEST CONDITIONS** | **MIN** | **TYP** | **MAX** | **UNITS** |
|---|---|---|---|---|---|
| $I_{GSSF}$, $I_{GSSR}$ | $V_{GS}$=4.5V, $V_{DS}$=0 | | | 10 | µA |
| $I_{DSS}$ | $V_{DS}$=16V, $V_{GS}$=0 | | | 100 | nA |
| $BV_{DSS}$ | $V_{GS}$=0, $I_D$=250µA | 20 | | | V |
| $V_{GS(th)}$ | $V_{DS}$=$V_{GS}$, $I_D$=250µA | 0.5 | | 1.0 | V |
| $V_{SD}$ | $V_{GS}$=0, $I_S$=250mA | | | 1.1 | V |
| $r_{DS(ON)}$ | $V_{GS}$=4.5V, $I_D$=350mA | | 0.25 | 0.36 | Ω |
| $r_{DS(ON)}$ | $V_{GS}$=2.5V, $I_D$=300mA | | 0.37 | 0.5 | Ω |
| $r_{DS(ON)}$ | $V_{GS}$=1.8V, $I_D$=150mA | | | 0.8 | Ω |
| $Q_{g(tot)}$ | $V_{DS}$=10V, $V_{GS}$=4.5V, $I_D$=200mA | | 1.2 | | nC |
| $Q_{gs}$ | $V_{DS}$=10V, $V_{GS}$=4.5V, $I_D$=200mA | | 0.24 | | nC |
| $Q_{gd}$ | $V_{DS}$=10V, $V_{GS}$=4.5V, $I_D$=200mA | | 0.36 | | nC |

Notes: (1) Mounted on 2 inch square FR-4 PCB with copper mounting pad area of 1.13in$^2$

**CMUDM8005**

**SURFACE MOUNT**
**P-CHANNEL**
**ENHANCEMENT-MODE**
**SILICON MOSFET**

**ELECTRICAL CHARACTERISTICS - Continued:** ($T_A$=25°C unless otherwise noted)

| SYMBOL | TEST CONDITIONS | MIN | TYP | UNITS |
|---|---|---|---|---|
| $g_{FS}$ | $V_{DS}$=10V, $I_D$=200mA | 0.2 | | S |
| $C_{rss}$ | $V_{DS}$=16V, $V_{GS}$=0, f=1.0MHz | | 25 | pF |
| $C_{iss}$ | $V_{DS}$=16V, $V_{GS}$=0, f=1.0MHz | | 100 | pF |
| $C_{oss}$ | $V_{DS}$=16V, $V_{GS}$=0, f=1.0MHz | | 21 | pF |
| $t_{on}$ | $V_{DD}$=10V, $V_{GS}$=4.5V, $I_D$=200mA, $R_G$=10Ω | | 38 | ns |
| $t_{off}$ | $V_{DD}$=10V, $V_{GS}$=4.5V, $I_D$=200mA, $R_G$=10Ω | | 48 | ns |

**SOT-523 CASE - MECHANICAL OUTLINE**

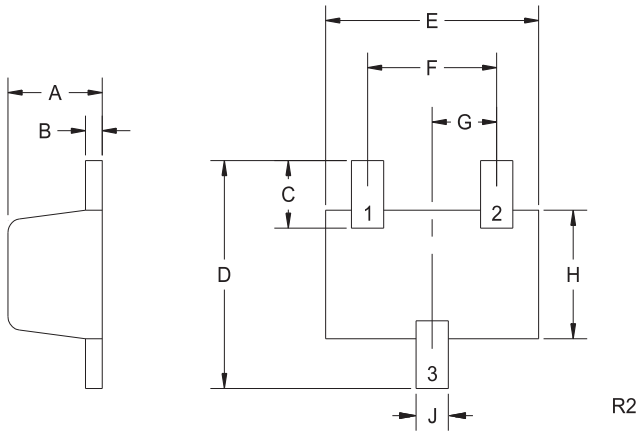


**PIN CONFIGURATION**
(Bottom View)

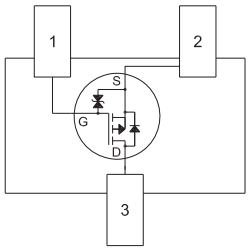


**LEAD CODE:**
1) Gate
2) Source
3) Drain

**MARKING CODE: 5C8**

| DIMENSIONS | | | | |
|---|---|---|---|---|
| | INCHES | | MILLIMETERS | |
| SYMBOL | MIN | MAX | MIN | MAX |
| A | 0.023 | 0.031 | 0.58 | 0.78 |
| B | 0.002 | 0.008 | 0.04 | 0.20 |
| C | 0.013 | 0.021 | 0.34 | 0.54 |
| D | 0.059 | 0.067 | 1.50 | 1.70 |
| E | 0.059 | 0.067 | 1.50 | 1.70 |
| F | 0.035 | 0.043 | 0.90 | 1.10 |
| G | 0.020 | | 0.50 | |
| H | 0.031 | 0.039 | 0.78 | 0.98 |
| J | 0.010 | 0.014 | 0.25 | 0.35 |

SOT-523 (REV: R2)

R3 (27-September 2011)