molex
one company › a world of innovation

This document was generated on 06/10/2016

PLEASE CHECK WWW.MOLEX.COM FOR LATEST PART INFORMATION

Part Number: 0760119123

Status: Active

Overview: GbX I-Trac™ Backplane Connector System

Description: GbX I-Trac™ Right Angle Header Module, 1.85mm by 3.70mm Pitch, Right Guided Inverted, Left Wall, 7 Rows, 10 Columns, 140 Circuits, Mating Pin Length 4.70mm, Lead-Free

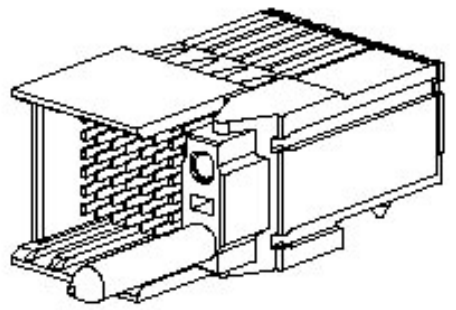

Series image - Reference only

Documents:

Drawing (PDF)
Product Specification PS-75710-999 (PDF)
Packaging Specification PK-70873-588 (PDF)
RoHS Certificate of Compliance (PDF)

General	
Product Family	Backplane Connectors
Series	76011
Application	Coplanar, Daughtercard
Component Type	Right Angle Male
Overview	GbX I-Trac™ Backplane Connector System
Product Name	GbX I-Trac™
UPC	884982102781
Physical	
Circuits (Loaded)	140
Circuits (maximum)	140
Color - Resin	Black
Durability (mating cycles max)	200
First Mate / Last Break	No
Guide to Mating Part	Yes
Keying to Mating Part	None
Material - Metal	High Performance Alloy (HPA)
Material - Plating Mating	Gold
Material - Plating Termination	Tin
Material - Resin	High Temperature Thermoplastic
Net Weight	34.649/g
Number of Columns	10
Number of Pairs	4, Open Pin Field
Number of Rows	7
Orientation	Right Angle
PC Tail Length	2.00mm
PCB Locator	No
PCB Retention	None
PCB Thickness - Recommended	1.60mm
Packaging Type	Tray
Pitch - Mating Interface	3.70mm
Stackable	No
Surface Mount Compatible (SMC)	Yes
Temperature Range - Operating	85°C
Termination Interface: Style	Through Hole - Compliant Pin
Electrical	
Current - Maximum per Contact	1.0A
Data Rate	12.0 Gbps
Shielded	No
Voltage - Maximum	120V AC (RMS)/DC
Material Info	
Reference - Drawing Numbers	
Packaging Specification	PK-70873-588

EU ELV
Not Relevant

EU RoHS
Compliant

China RoHS

REACH SVHC
Not Contained Per -ED/79/2015 (17 December 2015)

Halogen-Free Status
Low-Halogen

Need more information on product environmental compliance?

Email productcompliance@molex.com
Please visit the Contact Us section for any non-product compliance questions.

China ROHS	Green Image
ELV	Not Relevant

Search Parts in this Series
76011 Series

Mates With
76020 GbX I-Trac™ Right Angle Receptacle Module

Use With
78230 GbX I-Trac™ Right Angle Power Receptacle

Application Tooling | **FAQ**

Tooling specifications and manuals are found by selecting the products below. Crimp Height Specifications are then contained in the Application Tooling Specification document.

Global

Description	Product #
Press-In Tool for Right Angle	0622018612

Product Specification	PS-75710-999	Receptacle and Header 7-Row, 10-Column	
Sales Drawing	SD-76011-003	Right Angle Male (RAM) Module Removal Tool	0622023080

This document was generated on 06/10/2016

PLEASE CHECK WWW.MOLEX.COM FOR LATEST PART INFORMATION