Online data sheet

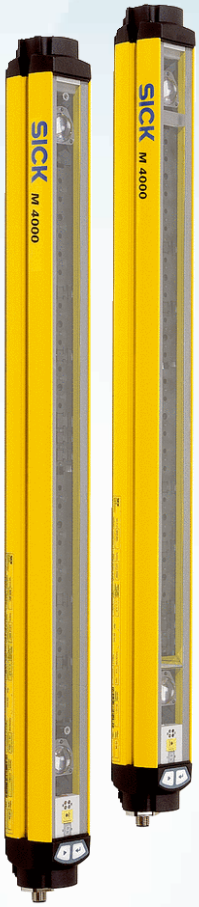

M40S-043010AR0, M40E-043010RR0

M4000 Standard

MULTIPLE LIGHT BEAM SAFETY DEVICES

SICK
Sensor Intelligence.

Ordering information

System part	Type	Part no.
Sender	M40S-043010AR0	1200015
Receiver	M40E-043010RR0	1200032

Other models and accessories → www.sick.com/M4000_Standard

Detailed technical data

Features

Scanning range	0.5 m ... 70 m, configurable
Low scanning range	0.5 m ... 20 m
Great scanning range	9 m ... 70 m
Number of beams	4
Beam separation	300 mm
Response time	10 ms
Synchronization	Optical synchronisation
Integrated laser alignment aid	✓

Safety-related parameters

Type	Type 4 (IEC 61496)
Safety integrity level	SIL3 (IEC 61508) SILCL3 (EN 62061)
Category	Category 4 (EN ISO 13849)
Performance level	PL e (EN ISO 13849)
PFH_D (mean probability of a dangerous failure per hour)	6.6×10^{-9} (EN ISO 13849)
T_M (mission time)	20 years (EN ISO 13849)
Safe state in the event of a fault	At least one OSSD is in the OFF state.

Functions

	Functions	Delivery status
Restart interlock	✓	Internal
External device monitoring (EDM)	✓	Activated
Beam coding	✓	Uncoded
Sender test	✓	Deactivated
Configurable scanning range	✓	0.5 m ... 20 m
Configurable application diagnostic output	✓	Contamination (OWS)

Interfaces

System connection	
Connection type	Male connector M12, 8-pin
Permitted cable length	≤ 15 m [1]
Permitted cross-section	≥ 0.25 mm²
Configuration method	Configuration buttons
Display elements	LEDs 7-segment display
Fieldbus, industrial network	
Integration via Flexi Soft safety controller	CANopen, DeviceNet™, EtherCAT®, EtherNet/IP™, Modbus TCP, PROFIBUS DP, PROFINET [2]

[1] Depending on load, power supply and wire cross-section. The technical specifications must be observed.
[2] For additional information on Flexi Soft -> www.sick.com/Flexi_Soft.

Electrical data

Protection class	III (EN 50178)
Supply voltage V_S	24 V DC (19.2 V DC ... 28.8 V DC) [1]
Residual ripple	≤ 10 % [2]
Power consumption	≤ 0.2 A: ≤ 0.6 A (depending on type)
Safety outputs (OSSD)	
Type of output	2 PNP semiconductors, short-circuit protected, cross-circuit monitored [3]
Switching voltage HIGH	24 V DC (V_S – 2.25 V DC ... V_S)
Switching voltage LOW	≤ 2 V DC
Switching current	≤ 500 mA
Diagnostic outputs	
Type of output	PNP semiconductor, short-circuit protected
Switching voltage HIGH	24 V DC (V_S – 4.2 V DC ... V_S)
Switching voltage LOW	High resistance
Switching current	≤ 100 mA

[1] The external voltage supply must be capable of buffering brief mains voltage failures of 20 ms as specified in EN 60204-1. Suitable power supplies are available as accessories from SICK.
[2] Within the limits of V_S.
[3] Applies to the voltage range between –30 V and +30 V.

Mechanical data

Housing cross-section	52 mm x 55.5 mm
Housing material	Aluminum alloy ALMGSI 0.5
Surface treatment	Powder coated
Front screen material	Polycarbonate, scratch-resistant coating

Ambient data

Enclosure rating	IP65 (EN 60529)
Ambient operating temperature	–30 °C ... +55 °C
Storage temperature	–30 °C ... +70 °C
Air humidity	15 % ... 95 %, Non-condensing
Vibration resistance	5 g, 10 Hz ... 55 Hz (IEC 60068-2-6)

Shock resistance	10 g, 16 ms (IEC 60068-2-29)

Other information

Wave length	950 nm
Integrated laser alignment aid	✓
Laser class	2 (IEC 60825-1), do not stare into beam!
Light source	LED
Type of light	Visible red light
Wave length	630 nm ... 680 nm
Power consumption	≤ 1 mW

Classifications

ECl@ss 5.0	27272703
ECl@ss 5.1.4	27272703
ECl@ss 6.0	27272703
ECl@ss 6.2	27272703
ECl@ss 7.0	27272703
ECl@ss 8.0	27272703
ECl@ss 8.1	27272703
ECl@ss 9.0	27272703
ETIM 5.0	EC001832
ETIM 6.0	EC001832
UNSPSC 16.0901	46171620

Dimensional drawing (Dimensions in mm (inch))

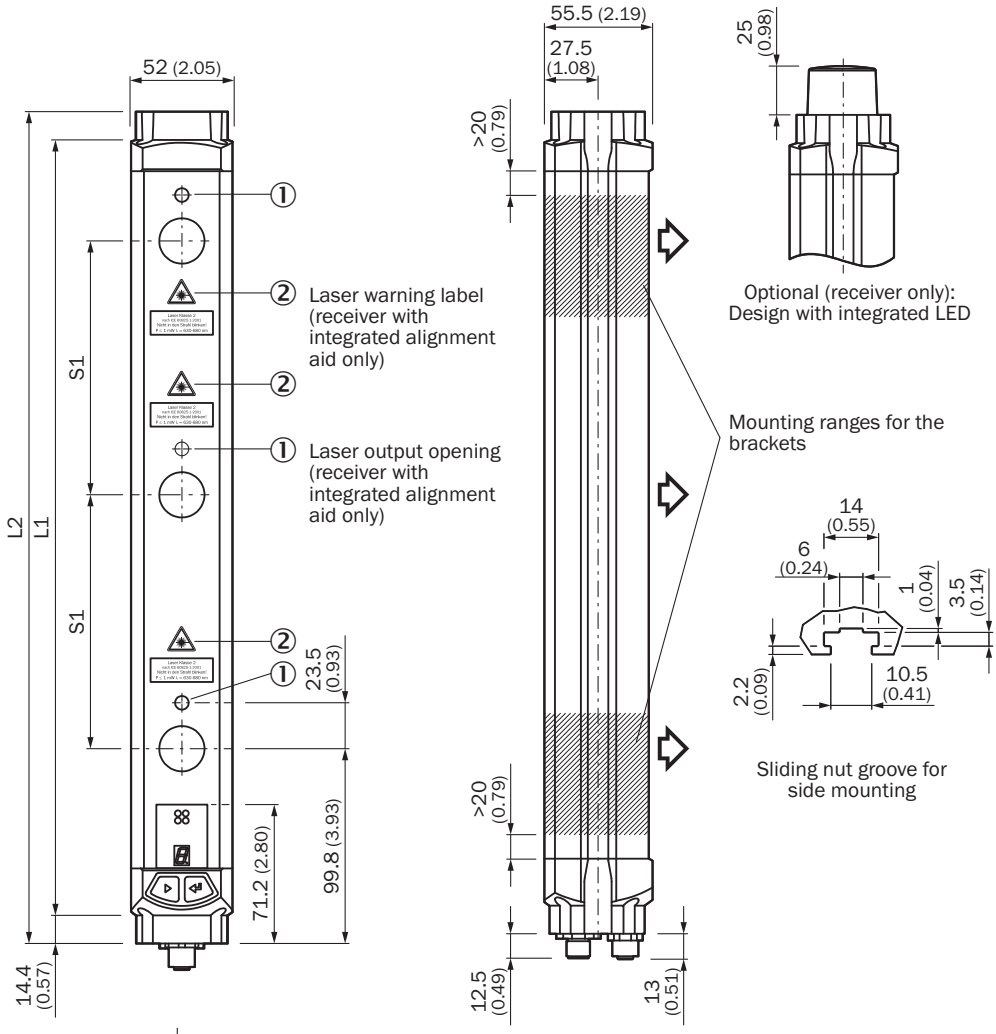

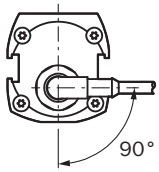

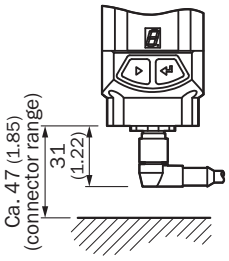

Cable socket M12 angled (only with AS-Interface: aligned)

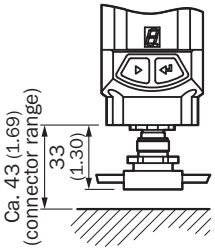

AS-Interface clip M12 (aligned)

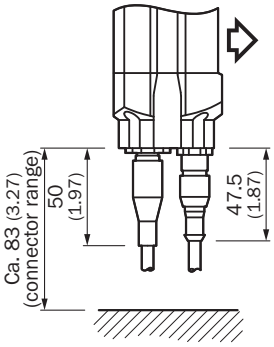

Cable socket M12 with cable (left) and cable plug M12 with cable (right, optional, only on receiver)

Number of beams	Beam separation S1	L1	L2
2	500 (19.69)	643 (25.31)	672 (26.46)
	600 (23.62)	743 (29.25)	772 (30.39)
3	220 (8.66)	583 (22.95)	612 (24.09)
	400 (15.75)	943 (37.13)	972 (38.27)
	450 (17.72)	1,043 (41.06)	1,072 (42.20)
4	220 (8.66)	803 (31.61)	832 (32.76)
	300 (11.81)	1,043 (41.06)	1,072 (42.20)
5	220 (8.66)	1,023 (40.28)	1,052 (41.42)
6		1,243 (48.94)	1,272 (50.08)
7		1,462 (57.56)	1,491 (58.70)
8		1,682 (66.22)	1,711 (67.36)

Connection diagram

M4000 Standard connected to UE10-3OS safety relay

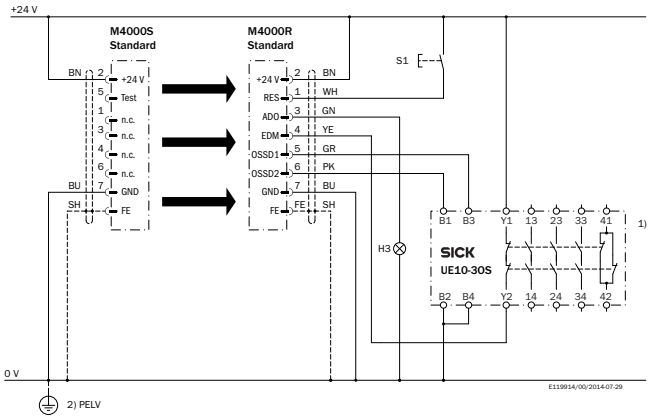

Task

Connection of an M4000 Standard multiple light beam safety device to a UE10-3OS safety relay.
Operating mode: with restart interlock and external device monitoring.

Operating characteristics

When the light path is clear and the UE10-3OS is de-energized and functioning correctly, the yellow LED on the receiver and the H3 lamp flash. The system is ready for switch-on and waits for an input signal/switch-on signal. The system is enabled by pressing and releasing the S1 button. The OSSD1 and OSSD2 outputs are live, the UE10-3OS is switched on. On interruption of one or several of the light beams, the UE10-3OS is de-energized by the OSSD1 and OSSD2 outputs.

Fault analysis

OSSD cross-circuits and short-circuits are detected and lead to the inhibited state (lock-out). The erroneous behavior of the UE10-3OS will be detected. The shutdown function is retained. On manipulation (e.g., jamming) of the S1 button, the system does not enable the output current circuits.

Comments

[1] Output circuits: These contacts are to be connected to the controller such that, with the output circuit open, the dangerous state is disabled. For categories 4 and 3, this integration must be dual-channel (x/y paths). Single-channel insertion in the control (z path) is only possible with a single-channel control and by taking the risk analysis into account.

[2] PELV in accordance with the requirements in EN 60204-1 / 6.4

Take note of the operating instructions of the integrated devices.

Recommended accessories

Other models and accessories ➜ www.sick.com/M4000_Standard

	Brief description	Type	Part no.
Mounting brackets and plates			
	4 pieces, Mounting kit 1, mounting bracket, rigid, L-shaped, including fixing screws and washers	BEF-3WNGBAST4	7021352
Terminal and alignment brackets			
	4 pieces, Mounting kit 6, side bracket, rotatable, Zinc diecast	BEF-1SHABAZN4	2019506
	4 pieces, Mounting kit 12, rotatable, swivel mount	BEF-2SMGEAKU4	2030510
Alignment aids			
	Laser alignment aid for various sensors, laser class 2 (IEC 60825). Do not look into the beam!	AR60	1015741
	Adapter AR60 for M4000 and M4000 Curtain	AR60 adapter, M4000	4040006

SICK AT A GLANCE

SICK is one of the leading manufacturers of intelligent sensors and sensor solutions for industrial applications. A unique range of products and services creates the perfect basis for controlling processes securely and efficiently, protecting individuals from accidents and preventing damage to the environment.

We have extensive experience in a wide range of industries and understand their processes and requirements. With intelligent sensors, we can deliver exactly what our customers need. In application centers in Europe, Asia and North America, system solutions are tested and optimized in accordance with customer specifications. All this makes us a reliable supplier and development partner.

Comprehensive services complete our offering: SICK LifeTime Services provide support throughout the machine life cycle and ensure safety and productivity.

For us, that is "Sensor Intelligence."

WORLDWIDE PRESENCE:

Contacts and other locations –www.sick.com

SICK
Sensor Intelligence.