One Cell Lithium-ion/Polymer Battery Protection IC

GENERAL DESCRIPTION

The HM5456R product is a high integration solution for lithium-ion/polymer battery protection. HM5456R contains advanced power MOSFET, high-accuracy voltage detection circuits and delay circuits. HM5456R is put into an ultra-small SOT23-5 package and only one external component makes it an ideal solution in limited space of battery pack. HM5456R has all the protection functions required in the battery application including overcharging, overdischarging, overcurrent and load short circuiting protection etc. The accurate overcharging detection voltage ensures safe and full utilization charging. The low standby current drains little current from the cell while in storage.
The device is not only targeted for digital cellular phones, but also for any other Li-Ion and Li-Poly battery-powered information appliances requiring long-term battery life.

FEATURES

- Protection of Charger Reverse Connection
- Protection of Battery Cell Reverse Connection with external load
- Integrate Advanced Power MOSFET with Equivalent of 17.5mΩ $R_{SS(ON)}$
- Ultra-small SOT23-5 Package
- Only One External Capacitor Required
- Over-temperature Protection
- Overcharge Current Protection
- Two-step Overcurrent Detection:
  - -Overdischarge Current
  - -Load Short Circuiting
- Charger Detection Function
- <0.5V(typ) Battery Charging Forbidden
- Delay Times are generated inside
- High-accuracy Voltage Detection
- Low Current Consumption
  - - Operation Mode: 3.9μA typ.
  - - Power-down Mode: 2.2μA typ.
- RoHS Compliant and Lead (Pb) Free

APPLICATIONS

One-Cell Lithium-ion Battery Pack
Lithium-Polymer Battery Pack
Power Bank

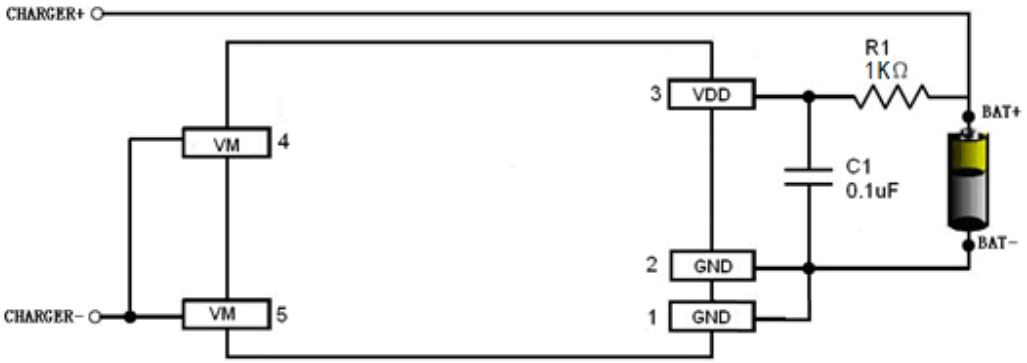

Figure 1. Typical Application Circuit

ORDERING INFORMATION

PART NUMBER	Package	Overcharge Detection Voltage [V_{CU}] (V)	Overcharge Release Voltage [V_{CL}] (V)	Overdischarge Detection Voltage [V_{DL}] (V)	Overdischarge Release Voltage [V_{DR}] (V)	Overcurrent Detection Current [I_{OV1}] (A)	Top Mark
HM5456R	SOT 23-5	4.30	4.10	2.40	3.0	9	56XXXXYW(note)

Note: “YW” is manufacture date code, “Y” means the year, “W” means the week

PIN CONFIGURATION

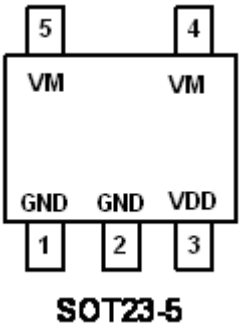

Figure 2. PIN Configuration

PIN DESCRIPTION

HM5456R PIN NUMBER	PIN NAME	PIN DESCRIPTION
1,2	GND	Ground, connect the negative terminal of the battery to this pin
3	VDD	Power Supply
4,5	VM	The negative terminal of the battery pack. The internal FET switch connects this terminal to GND

ABSOLUTE MAXIMUM RATINGS

(Note: Do not exceed these limits to prevent damage to the device. Exposure to absolute maximum rating conditions for long periods may affect device reliability.)

PARAMETER	VALUE	UNIT
VDD input pin voltage	-0.3 to 6	V
VM input pin voltage	-6 to 10	V
Operating Ambient Temperature	-40 to 85	°C
Maximum Junction Temperature	150	°C
Storage Temperature	-55 to 150	°C

Lead Temperature (Soldering, 10 sec)	300	°C
Power Dissipation at T=25°C	0.4	W
Package Thermal Resistance (Junction to Ambient) θ_{JA}	250	°C/W
Package Thermal Resistance (Junction to Case) θ_{JC}	130	°C/W
HBM ESD	2000	V

ELECTRICAL CHARACTERISTICS

Typicals and limits appearing in normal type apply for T_A = 25°C, unless otherwise specified

Parameter	Symbol	Test Condition	Min	Typ	Max	Unit
Detection Voltage						
Overcharge Detection Voltage	V_{CU}		4.25	4.30	4.35	V
Overcharge Release Voltage	V_{CL}		4.05	4.10	4.15	V
Overdischarge Detection Voltage	V_{DL}		2.3	2.4	2.5	V
Overdischarge Release Voltage	V_{DR}		2.9	3.0	3.1	V
Detection Current						
Overdischarge Current1 Detection	*I_{IOV1}	V_{DD}=3.6V	6	9	12	A
Overdischarge Current Recovery	*I_{ROV1}	V_{DD}=3.6V	15	25	40	uA
Overcharge Current Detection	*I_{CHOC}	V_{DD}=3.6V	5	7	9	A
Load Short-Circuiting Detection	*I_{SHORT}	V_{DD}=3.6V	20	40	60	A
Current Consumption						
Current Consumption in Normal Operation	I_{OPE}	V_{DD}=3.6V VM =0V		3.9	6	μA
Current Consumption in power Down	I_{PDN}	V_{DD}=2.0V VM pin floating		2.2	4	μA
VM Internal Resistance						
Internal Resistance between VM and V_{DD}	*R_{VMD}	VDD=2.0V VM pin floating	200	300	400	kΩ
Internal Resistance between VM and GND	*R_{VMS}	V_{DD}=3.6V VM=1.0V	15	25	35	kΩ
FET on Resistance						
Equivalent FET on Resistance	*$R_{SS(ON)}$	V_{DD}=3.6V I_{VM}=1.0A	16	17.5	21	mΩ
Over Temperature Protection						

Over Temperature Protection	*T_{SHD+}			150		°C
Over Temperature Recovery Degree	*T_{SHD-}			110		
Detection Delay Time						
Overcharge Voltage Detection Delay Time	*t_{CU}		80	130	180	mS
Overdischarge Voltage Detection Delay Time	*t_{DL}		20	40	60	mS
Overdischarge Current 1 Detection Delay Time	*t_{IOV1}	V_{DD}=3.6V	5	10	20	mS
Overcharge Current Detection Delay Time	*t_{CHOC}	V_{DD}=3.6V	5	10	20	mS
Load Short-Circuiting Detection Delay Time	*t_{SHORT}	V_{DD}=3.6V	180	380	600	uS

Note: * ---The parameter is guaranteed by design.

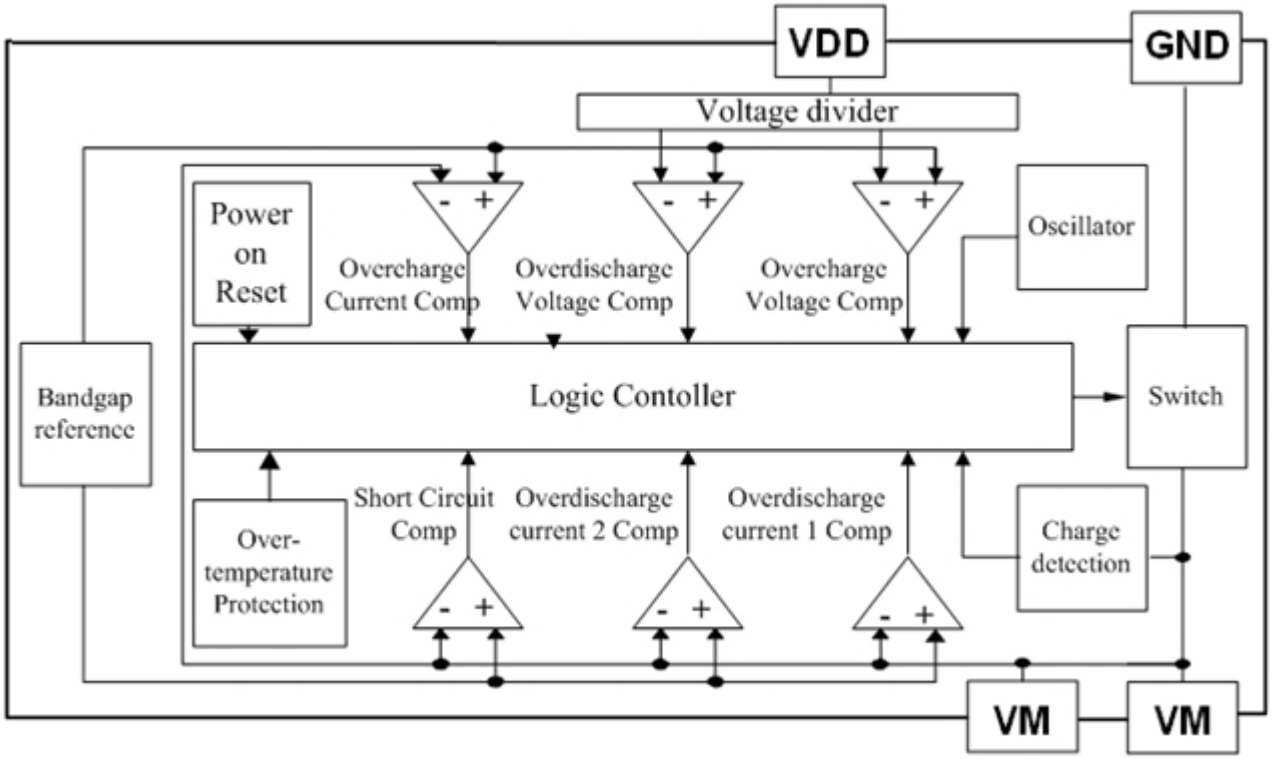

Figure 3. Functional Block Diagram

FUNCTIONAL DESCRIPTION

The HM5456R monitors the voltage and current of a battery and protects it from being damaged due to overcharge voltage, overdischarge voltage, overdischarge current, and short circuit conditions by disconnecting the battery from the load or charger. These functions are required in order to operate the battery cell within specified limits.

The device requires only one external capacitor. The MOSFET is integrated and its $R_{SS(ON)}$ is as low as 17.5mΩ typical.

Normal operating mode

If no exception condition is detected, charging and discharging can be carried out freely. This condition is called the normal operating mode.

Overcharge Condition

When the battery voltage becomes higher than the overcharge detection voltage (V_{CU}) during charging under normal condition and the state continues for the overcharge detection delay time (t_{CU}) or longer, the HM5456R turns the charging control FET off to stop charging. This condition is called the overcharge condition. The overcharge condition is released in the following two cases:

1, When the battery voltage drops below the overcharge release voltage (V_{CL}), the HM5456R turns the charging control FET on and returns to the normal condition.

2, When a load is connected and discharging starts, the HM5456R turns the charging control FET on and returns to the normal condition. The release mechanism is as follows: the discharging current flows through an internal parasitic diode of the charging FET immediately after a load is connected and discharging starts, and the VM pin voltage increases about 0.7 V (forward voltage of the diode) from the GND pin voltage momentarily. The HM5456R detects this voltage and releases the overcharge condition.

Consequently, in the case that the battery voltage is equal to or lower than the overcharge detection voltage (V_{CU}), the HM5456R returns to the normal condition immediately, but in the case the battery voltage is higher than the overcharge detection voltage (V_{CU}),the chip does not return to the normal condition until the battery voltage drops below the overcharge detection voltage (V_{CU}) even if the load is connected. In addition, if the VM pin voltage is equal to or lower than the overcurrent 1 detection voltage when a load is connected and discharging starts, the chip does not return to the normal condition.

Remark If the battery is charged to a voltage higher than the overcharge detection voltage (V_{CU}) and the battery voltage does not drops below the overcharge detection voltage (V_{CU}) even when a heavy load, which causes an overcurrent, is connected, the overcurrent 1 and overcurrent 2 do not work until the battery voltage drops below the overcharge detection voltage (V_{CU}). Since an actual battery has, however, an internal impedance of several dozens of mΩ, and the battery voltage drops immediately after a heavy load which causes an overcurrent is connected, the overcurrent 1 and overcurrent 2 work. Detection of load short-circuiting works regardless of the battery voltage.

Overdischarge Condition

When the battery voltage drops below the overdischarge detection voltage (V_{DL}) during discharging under normal condition and it continues for the overdischarge detection delay time (t_{DL}) or longer, the HM5456R turns the discharging control FET off and stops discharging. This condition is called overdischarge condition. After the discharging control FET is turned off, the VM pin is pulled up by the R_{VMD} resistor
between VM and VDD in HM5456R. Meanwhile when VM is bigger than 1.5 V (typ.) (the load short-circuiting detection voltage), the current of the chip is reduced to the power-down current (I_{PDN}). This condition is called power-down condition. The VM and VDD pins are shorted by the R_{VMD} resistor in the IC under the overdischarge and power-down conditions. The power-down condition is released when a charger is connected and the potential difference between VM and VDD becomes 1.3 V (typ.) or higher (load short-circuiting detection voltage). At this time, the FET is still off. When the battery voltage becomes the overdischarge detection voltage (V_{DL}) or higher (see note),

the HM5456R turns the FET on and changes to the normal condition from the overdischarge condition.

Remark If the VM pin voltage is no less than the charger detection voltage (V_{CHA}), when the battery under overdischarge condition is connected to a charger, the overdischarge condition is released (the discharging control FET is turned on) as usual, provided that the battery voltage reaches the overdischarge release voltage (V_{DU}) or higher.

Overcurrent Condition

When the discharging current becomes equal to or higher than a specified value (the VM pin voltage is equal to or higher than the overcurrent detection voltage) during discharging under normal condition and the state continues for the overcurrent detection delay time or longer, the HM5456R turns off the discharging control FET to stop discharging. This condition is called overcurrent condition. (The overcurrent includes overcurrent, or load short-circuiting.)

The VM and GND pins are shorted internally by the R_{VMS} resistor under the overcurrent condition. When a load is connected, the VM pin voltage equals the VDD voltage due to the load.

The overcurrent condition returns to the normal condition when the load is released and the impedance between the B+ and B- pins becomes higher than the automatic recoverable impedance. When the load is removed, the VM pin goes back to the GND potential since the VM pin is shorted the GND pin with the R_{VMS} resistor. Detecting that the VM pin potential is lower than the overcurrent detection voltage (V_{IOV}), the IC returns to the normal condition.

Abnormal Charge Current Detection

If the VM pin voltage drops below the charger detection voltage (V_{CHA}) during charging under the normal condition and it continues for the overcharge detection delay time (t_{CU}) or longer, the HM5456R turns the charging control FET off and stops charging. This action is called abnormal charge current detection.

Abnormal charge current detection works when the discharging control FET is on and the VM pin voltage drops below the charger detection voltage (V_{CHA}). When an abnormal charge current flows into a battery in the overdischarge condition, the HM5456R consequently turns the charging control FET off and stops charging after the battery voltage becomes the overdischarge detection voltage and the overcharge detection delay time (t_{CU}) elapses.

Abnormal charge current detection is released when the voltage difference between VM pin and GND pin becomes lower than the charger detection voltage (V_{CHA}) by separating the charger. Since the 0 V battery charging function has higher priority than the abnormal charge current detection function, abnormal charge current may not be detected by the product with the 0 V battery charging function while the battery voltage is low.

Load Short-circuiting condition

If voltage of VM pin is equal or below short circuiting protection voltage (V_{SHORT}), the HM5456R will stop discharging and battery is disconnected from load. The maximum delay time to switch current off is t_{SHORT}. This status is released when voltage of VM pin is higher than short protection voltage (V_{SHORT}), such as when disconnecting the load.

Delay Circuits

The detection delay time for overdischarge current 2 and load short-circuiting starts when overdischarge current 1 is detected.

As soon as overdischarge current 2 or load short-circuiting is detected over detection delay time for overdischarge current 2 or load short- circuiting, the HM5456R stops discharging. When battery voltage falls below overdischarge detection voltage due to overdischarge current, the HM5456R stop discharging by overdischarge current detection. In this case the recovery of battery voltage is so slow that if battery voltage after overdischarge voltage detection delay time is still lower than overdischarge detection voltage, the HM5456R shifts to power-down.

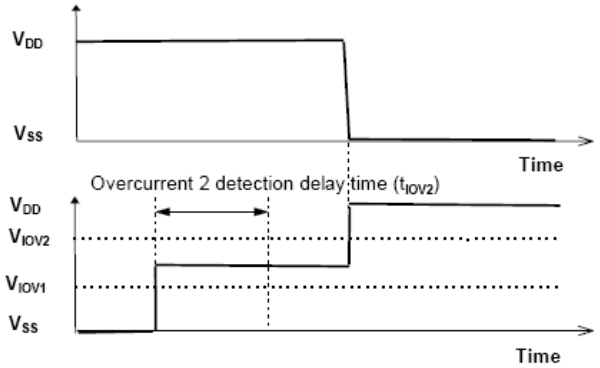

Figure 4. Overcurrent delay time

0V Battery Charging Function (1) (2) (3)

This function enables the charging of a connected battery whose voltage is 0 V by self-discharge. When a charger having 0 V battery start charging charger voltage (V_{0CHA}) or higher is connected between B+ and B- pins, the charging control FET gate is fixed to VDD potential. When the voltage between the gate and the source of the charging control FET becomes equal to or higher than the turn-on voltage by the charger voltage, the charging control FET is turned on to start charging. At this time, the discharging control FET is off and the charging current flows through the internal parasitic diode in the discharging control FET. If the battery voltage becomes equal to or higher than the overdischarge release voltage (V_{DU}), the normal condition returns.

Note

(1) Some battery providers do not recommend charging of completely discharged batteries. Please refer to battery providers before the selection of 0 V battery charging function.

(2) The 0V battery charging function has higher priority than the abnormal charge current detection function. Consequently, a product with the 0 V battery charging function charges a battery and abnormal charge current cannot be detected during the battery voltage is low (at most 1.8 V or lower).

(3) When a battery is connected to the IC for the first time, the IC may not enter the normal condition in which discharging is possible. In this case, set the VM pin voltage equal to the GND voltage (short the VM and GND pins or connect a charger) to enter the normal condition.

TIMING CHART

1. Overcharge and overdischarge detection

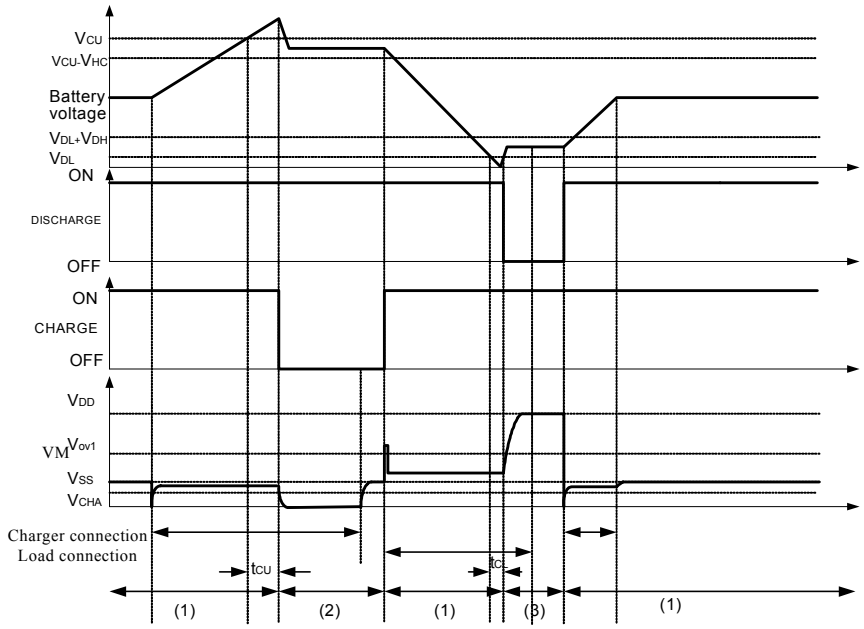

Figure5-1 Overcharge and Overdischarge Voltage Detection

2. Overdischarge current detection

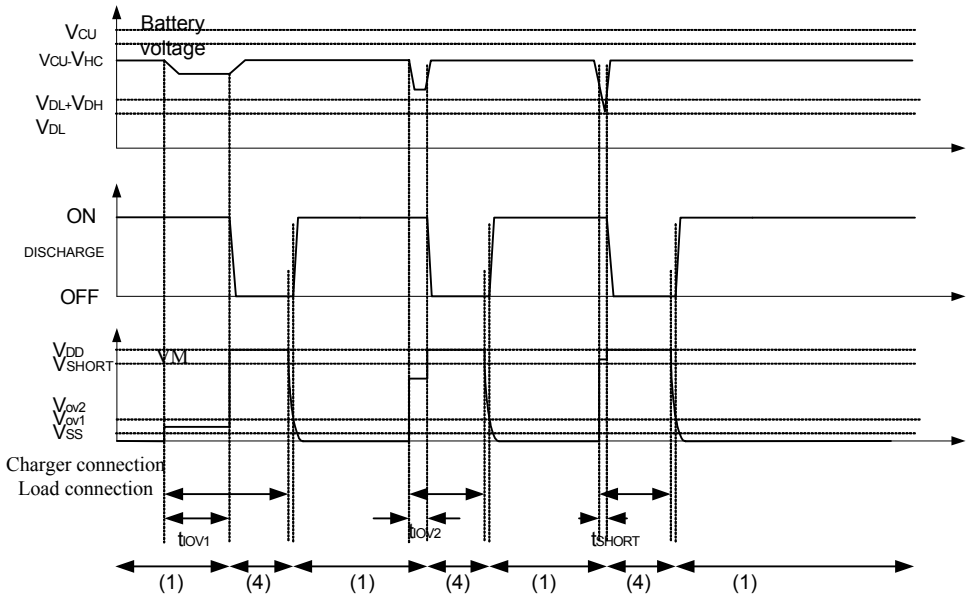

Figure5-2 Overdischarge Current Detection

Remark: (1) Normal condition (2) Overcharge voltage condition (3) Overdischarge voltage condition (4) Overcurrent condition

3. Charger Detection

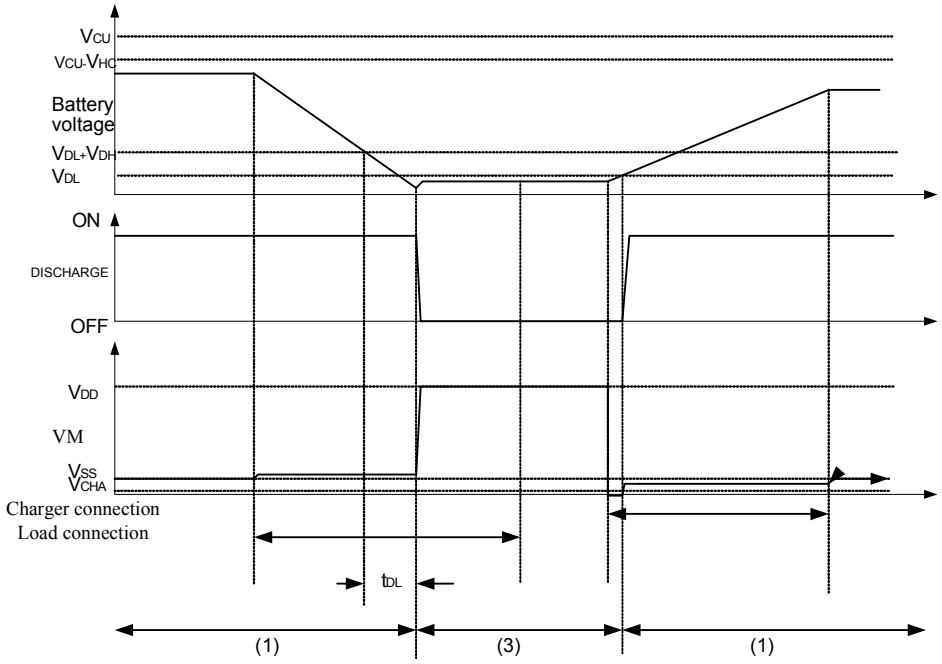

Figure5-3 Charger Detection

4. Abnormal Charger Detection

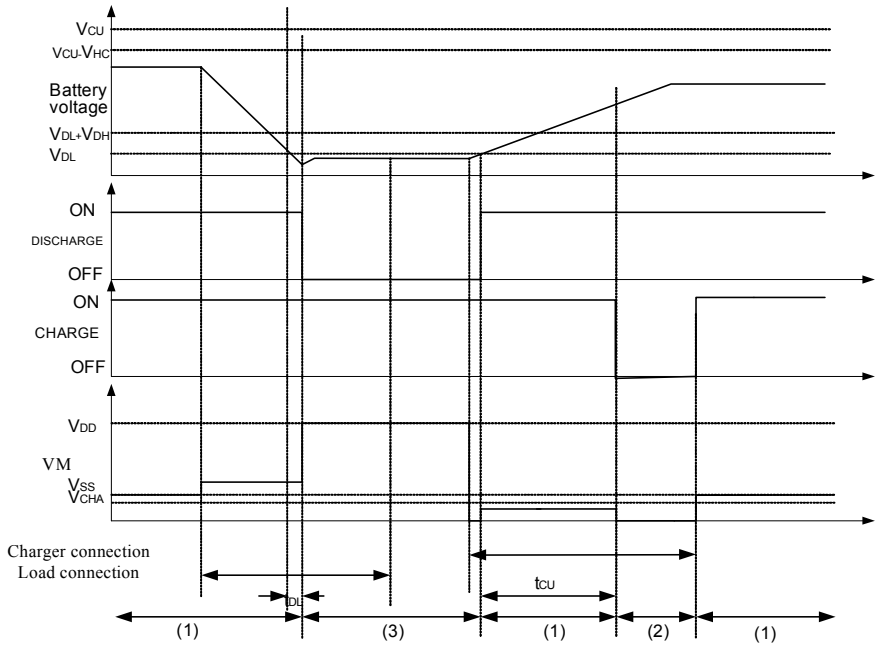

Figure5-4 Abnormal Charger Detection

Remark: (1) Normal condition (2) Overcharge voltage condition (3) Overdischarge voltage condition (4) Overcurrent condition

TYPICAL APPLICATION

As shown in Figure 6, the bold line is the high density current path which must be kept as short as possible. For thermal management, ensure that these trace widths are adequate.C1& R1 is a decoupling capacitor & resistor which should be placed as close as possible to HM5456R.

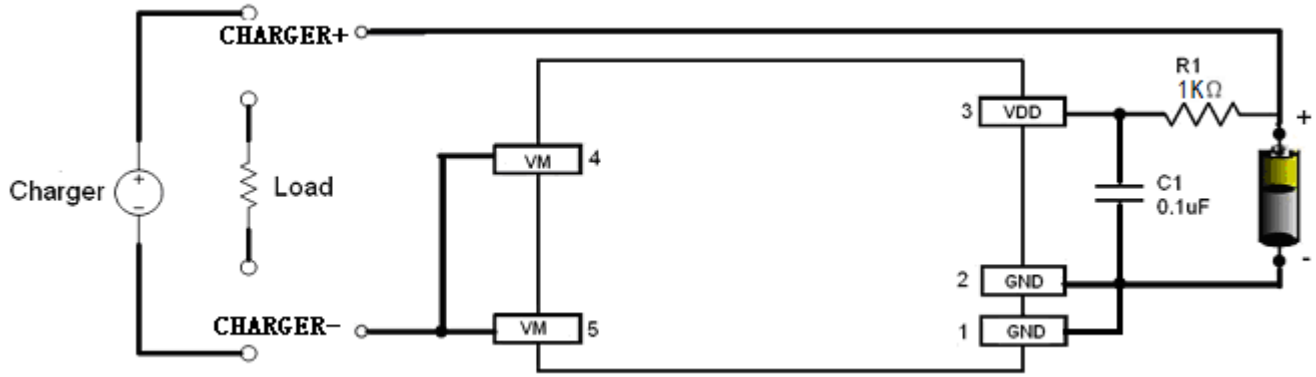

Fig 6 HM5456R in a Typical Battery Protection Circuit

Precautions

• Pay attention to the operating conditions for input/output voltage and load current so that the power loss in HM5456R does not exceed the power dissipation of the package.
• Do not apply an electrostatic discharge to this HM5456R that exceeds the performance ratings of the built-in electrostatic protection circuit.

PACKAGE OUTLINE

SOT23-5 PACKAGE OUTLINE AND DIMENSIONS

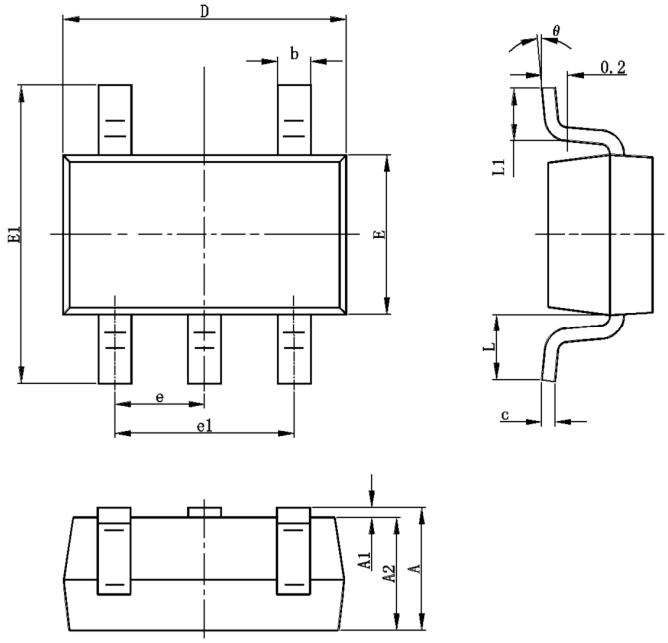

SYMBOL	DIMENSION IN MILIMETERS		DIMENSION IN INCHES	
	MIN	MAX	MIN	MAX
A	0.950	1.250	0.038	0.049
A1	0.000	0.100	0.000	0.004
A2	0.900	1.150	0.036	0.045
b	0.300	0.400	0.012	0.016
c	0.100	0.200	0.004	0.008
D	2.820	3.020	0.111	0.119
E	1.500	1.700	0.059	0.067
E1	2.650	2.950	0.104	0.116
e	0.950 TYP		0.037 TYP	
e1	1.800	2.000	0.071	0.079
L	0.700 REF		0.028 REF	
L1	0.300	0.600	0.012	0.024
θ	0°	8°	0°	8°