Part Number: 0639108300
Status: Active
Description: T2 Terminator for Crimp Terminal, Male 18-24 AWG Wire

Documents:
RoHS Certificate of Compliance (PDF)

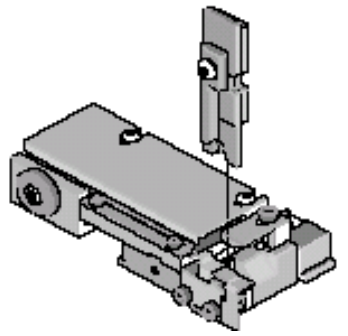

Series image - Reference only

General

Product Family	Application Tooling
Series	T9999
Comments	See Tooling Specification (PDF) Above
Function	Crimp
Geographic Area	Global
Level of Automation	Semi-Automatic
More Detailed Tech Information	applicationtooling@molex.com
Product Name	T2
Survey	www.molex.com//review/apptool_survey.html
Tool Type	Terminator
UPC	884982003484

Material Info

Reference - Drawing Numbers

Application Tooling Documents	ATS-639108300, TM-638500090, TM-638500090SP

EU ELV
Not Reviewed

EU RoHS
Not Reviewed

China RoHS

REACH SVHC
Not Reviewed

Halogen-Free Status
Not Reviewed

Need more information on product environmental compliance?

Email productcompliance@molex.com
Please visit the Contact Us section for any non-product compliance questions.

China ROHS	Not Reviewed
ELV	Not Reviewed

Search Parts in this Series
T9999 Series

Use With
MX150L™ Male Terminal 19417