Intel Node Manager Compliant System Power Management and Protection IC with PMBus

Check for Samples: LM25066I, LM25066IA

FEATURES

- **Fully Node Manager 2.0 and 2.5 Compliant with I2C/SMBus interface and PMBus™ compliant command structure**
- **Input voltage range: 2.9V to 17V**
- **Programmable 25mV or 46mV current limit threshold**
- **Read_EIN accurately measures true input power via simultaneous sampling**
- **Configurable circuit breaker protection for hard shorts**
- **Configurable under- and over-voltage lockouts with hysteresis**
- **Real time monitoring of V_{IN}, V_{OUT}, I_{IN}, P_{IN}, V_{AUX} with 12-bit resolution and 1 kHz sampling rate**
- **Current measurement accuracy: ±1% (LM25066IA) and Power measurement accuracy: ±2.0% (LM25066IA) over temperature**
- **Averaging of V_{IN}, I_{IN}, P_{IN}, and V_{OUT} over programmable interval ranging from 0.001 to 4 seconds**
- **Programmable WARN and FAULT thresholds with $\overline{\text{SMBA}}$ notification**
- **Blackbox capture of telemetry measurements and device status triggered by WARN or FAULT condition**
- **24-lead WQFN package**

APPLICATIONS

- **Server backplane systems**
- **Basestation power distribution systems**
- **Solid state circuit breaker (eFuse)**

DESCRIPTION

While the LM25066I/A is functionally similar to the LM25066/A, the LM25066I/A is fully compliant to Intel Node Manager 2.0, 2.5 and adds the READ_EIN energy accumulator feature. The LM25066I/A combines a high-performance hot-swap controller with a PMBus 1.2™ compliant SMBus/I^2C interface to accurately measure, control and protect the electrical operating conditions of critical systems. The LM25066I/A continuously supplies real-time power, voltage, current, temperature, and fault data to the system management host via the SMBus interface.

The LM25066I/A control block includes a unique hot-swap architecture that provides current and power limiting to protect sensitive circuitry even during the most stressful conditions. A fast-acting circuit breaker prevents damage in the event of a short circuit on the output. The input under-voltage, over-voltage hysteresis, insertion delay time and fault detection time are all configurable. A temperature monitoring block on the LM25066I/A interfaces with a low-cost external diode for continuous temperature assessment of the external MOSFET or other thermal sensitive components. The POWER GOOD output provides a fast alert when the input and/or output voltages are outside their programmed range. Accurate power readings are accomplished by using the READ_EIN command. A black box (Telemetry/Fault Snapshot) function captures and stores telemetry data and device status in the event of a warning or a fault.

Please be aware that an important notice concerning availability, standard warranty, and use in critical applications of Texas Instruments semiconductor products and disclaimers thereto appears at the end of this data sheet.

All trademarks are the property of their respective owners.

PRODUCTION DATA information is current as of publication date. Products conform to specifications per the terms of the Texas Instruments standard warranty. Production processing does not necessarily include testing of all parameters.

Copyright © 2012–2013, Texas Instruments Incorporated

Typical Application Schematic

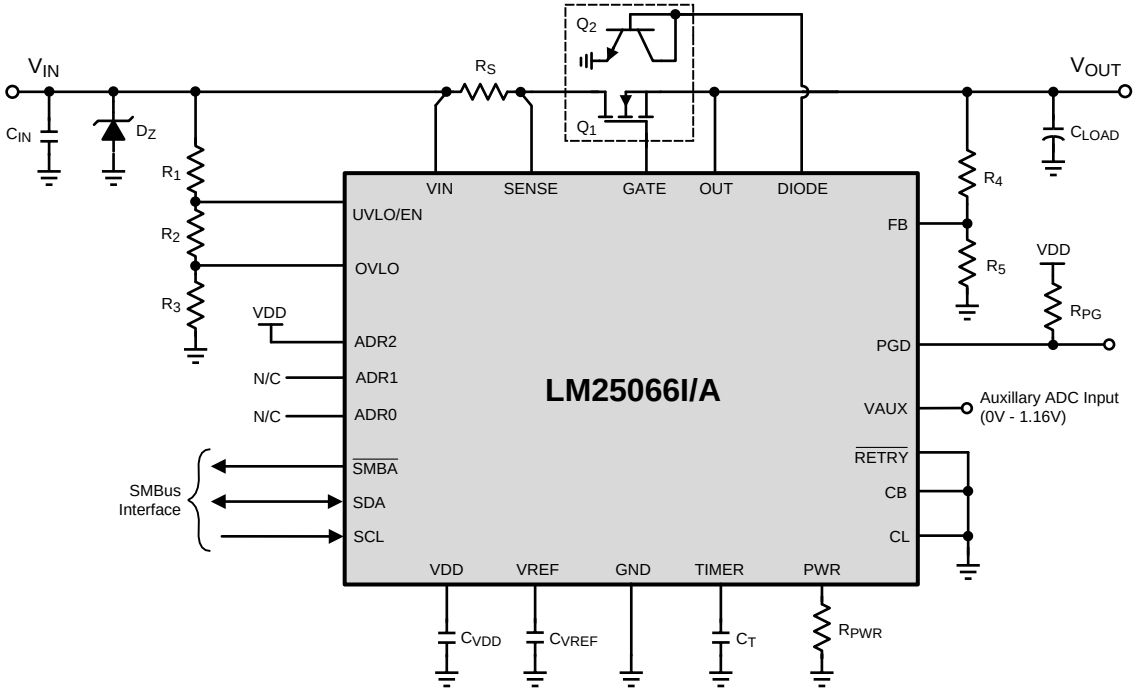

Connection Diagram

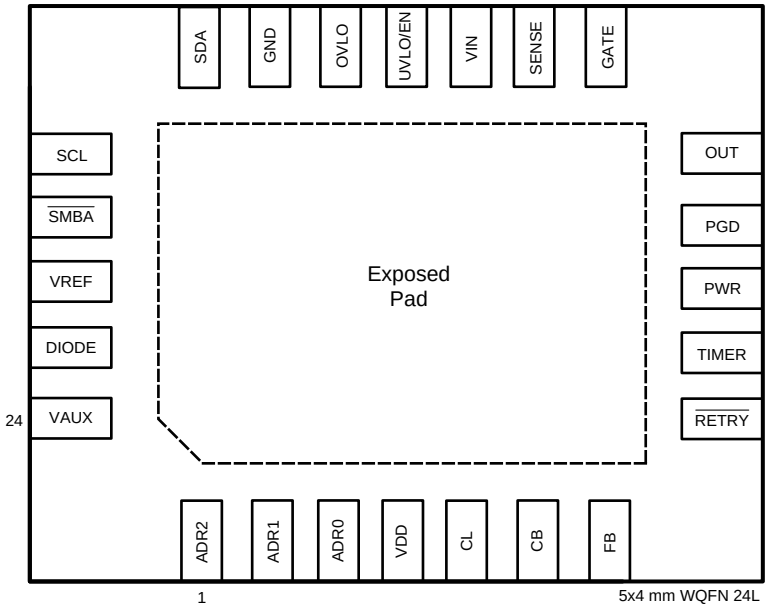

Solder exposed pad to ground.

Top View
WQFN-24

Copyright © 2012–2013, Texas Instruments Incorporated

Pin Descriptions

Pin No.	Name	Description	Applications Information
Pad	Exposed Pad	Exposed pad of WQFN package	No internal electrical connection. Solder to the ground plane to reduce thermal resistance.
1	ADR2	SMBUS address line 2	3 - state address line. Should be connected to GND, VDD, or left floating.
2	ADR1	SMBUS address line 1	3 - state address line. Should be connected to GND, VDD, or left floating.
3	ADR0	SMBUS address line 0	3 - state address line. Should be connected to GND, VDD, or left floating.
4	VDD	Internal sub-regulator output	Internally sub-regulated 4.5V bias supply. Connect a 1 µF capacitor on this pin to ground for bypassing.
5	CL	Current limit range	Connect this pin to GND to set the nominal over-current threshold at 25mV. Connecting CL to VDD will set the over-current threshold to be 46mV.
6	CB	Circuit breaker range	This pin sets the circuit breaker protection point in relation to the over-current trip point. When connected to GND, this pin will set the circuit breaker point to be 1.8 times the over-current threshold. Connecting this pin to VDD sets the circuit breaker trip point to be 3.6 times the over-current threshold.
7	FB	Power Good feedback	An external resistor divider from OUT sets the output voltage at which the PGD pin switches. The threshold at the pin is 1.167V. An internal 24 µA current source provides hysteresis.
8	$\overline{\text{RETRY}}$	Fault retry input	This pin configures the power up fault retry behavior. When this pin is grounded, the device will continually try to engage power during a fault. If the pin is connected to VDD, the device will latch off during a fault.
9	TIMER	Timing capacitor	An external capacitor connected to this pin sets the insertion time delay, fault timeout period and restart timing.
10	PWR	Power limit set	An external resistor connected to this pin, in conjunction with the current sense resistor (R_S), sets the maximum power dissipation allowed in the external series pass MOSFET.
11	PGD	Power Good indicator	An open drain output. This output is high when the voltage at the FB pin is above 1.167V and the input supply is within its under-voltage and over-voltage thresholds. Connect via a pullup resistor to the output rail (external MOSFET source) or any other voltage to be monitored.
12	OUT	Output feedback	Connect to the output rail (external MOSFET source). Internally used to determine the MOSFET V_{DS} voltage for power limiting, and to monitor the output voltage.
13	GATE	Gate drive output	Connect to the external MOSFET's gate.
14	SENSE	Current sense input	The voltage across the current sense resistor (R_S) is measured from VIN to this pin. If the voltage across R_S reaches over-current threshold, the load current is limited and the fault timer activates.
15	VIN	Positive supply input	A small ceramic bypass capacitor close to this pin is recommended to suppress transients which occur when the load current is switched off.
16	UVLO/EN	Under-voltage lockout	An external resistor divider from the system input voltage sets the under-voltage turn-on threshold. An internal 23 µA current source provides hysteresis. The enable threshold at the pin is 1.16V. This pin can also be used for remote shutdown control.
17	OVLO	Over-voltage lockout	An external resistor divider from the system input voltage sets the over-voltage turn-off threshold. An internal 23 µA current source provides hysteresis. The disable threshold at the pin is 1.16V.
18	GND	Circuit ground	
19	SDA	SMBus data pin	Data pin for SMBus.
20	SCL	SMBus clock	Clock pin for SMBus.
21	$\overline{\text{SMBA}}$	SMBus alert line	Alert pin for SMBus, active low.
22	VREF	Internal Reference	Internally generated precision 2.73V reference used for analog to digital conversion. Connect a 1 µF capacitor on this pin to ground for bypassing.
23	DIODE	External diode	Connect this to a diode-configured NPN transistor for temperature monitoring.
24	VAUX	Auxiliary voltage input	Auxiliary pin allows voltage telemetry from an external source. Full scale input of 1.16V.

These devices have limited built-in ESD protection. The leads should be shorted together or the device placed in conductive foam during storage or handling to prevent electrostatic damage to the MOS gates.

Copyright © 2012–2013, Texas Instruments Incorporated

Absolute Maximum Ratings[1]

VIN, SENSE to GND [2]	-0.3V to 24V
GATE, FB, UVLO/EN, OVLO, PGD to GND [2]	-0.3V to 20V
Out to GND	-1 to 20V
SCL, SDA, $\overline{\text{SMBA}}$, CL, CB, ADR0, ADR1, ADR2, VDD, VAUX, DIODE, $\overline{\text{RETRY}}$ to GND	-0.3V to 6V
VIN to SENSE	-0.3V to +0.3V
ESD Rating, Human Body Model[3]	2kV
Storage Temperature	-65°C to +150°C
Junction Temperature	+150°C

(1) Absolute Maximum Ratings indicate limits beyond which damage to the device may occur. Operating Ratings indicate conditions for which the device is intended to be functional.
(2) The GATE pin voltage is typically 7.5V above VIN when the LM25066I/A is enabled. Therefore, the Absolute Maximum Rating of 24V for VIN and SENSE apply only when the LM25066I/A is disabled or for a momentary surge to that voltage since the Absolute Maximum Rating for the GATE pin is 20V.
(3) The human body model is a 100 pF capacitor discharged through a 1.5 kΩ resistor into each pin.

Operating Ratings

VIN, SENSE, OUT voltage	2.9V to 17V
VDD	2.9V to 5.5V
Junction Temperature	−40°C to +125°C

Electrical Characteristics

Limits in standard type are for T_J = 25°C only; limits in boldface type apply over the junction temperature (T_J) range of -40°C to +85°C unless otherwise stated. Minimum and Maximum limits are specified through test, design, or statistical correlation. Typical values represent the most likely parametric norm at T_J = 25°C, and are provided for reference purposes only. Unless otherwise stated the following conditions apply: VIN = 12V. See [1] and

Symbol	Parameter	Conditions	Min	Typ	Max	Unit
Input (VIN Pin)						
I_{IN-EN}	Input Current, enabled	UVLO = 2V and OVLO = 0.7V		5.8	**8**	mA
POR	Power On Reset threshold at VIN	VIN increasing		2.6	**2.8**	V
POR_{HYS}	POR_{EN} Hysteresis	VIN decreasing		150		mV
VDD Regulator (VDD pin)						
V_{DD}		I_{VDD} = 5mA, VIN = 12V	**4.3**	4.5	**4.7**	V
		I_{VDD} = 5mA, VIN = 4.5V	**3.5**	3.9	**4.3**	V
V_{DDILIM}	VDD Current Limit		**25**	45		mA
UVLO/EN, OVLO Pins						
$UVLO_{TH}$	UVLO threshold	V_{UVLO} Falling	**1.147**	1.16	**1.173**	V
$UVLO_{HYS}$	UVLO hysteresis current	UVLO = 1V	**18**	23	**28**	µA
$UVLO_{DEL}$	UVLO delay	Delay to GATE high		8		µs
		Delay to GATE low		20		
$UVLO_{BIAS}$	UVLO bias current	UVLO = 3V			**1**	µA
$OVLO_{TH}$	OVLO threshold	V_{OVLO} rising	**1.141**	1.16	**1.185**	V
$OVLO_{HYS}$	OVLO hysteresis current	OVLO = 1V	**-28**	-23	**-18**	µA
$OVLO_{DEL}$	OVLO delay	Delay to GATE high		19		µs
		Delay to GATE low		9		
$OVLO_{BIAS}$	OVLO bias current	OVLO = 1V			**1**	µA
Power Good (PGD pin)						
PGD_{VOL}	Output low voltage	I_{SINK} = 2 mA		25	**60**	mV
PGD_{IOH}	Off leakage current	V_{PGD} = 17V			**1**	µA
PGD_{DELAY}	Power Good Delay	V_{FB} to V_{PG}		115		ns

(1) Current out of a pin is indicated as a negative value.

Copyright © 2012–2013, Texas Instruments Incorporated

Electrical Characteristics (continued)

Limits in standard type are for T_J = 25°C only; limits in boldface type apply over the junction temperature (T_J) range of -40°C to +85°C unless otherwise stated. Minimum and Maximum limits are specified through test, design, or statistical correlation. Typical values represent the most likely parametric norm at T_J = 25°C, and are provided for reference purposes only. Unless otherwise stated the following conditions apply: VIN = 12V. See (1) and

Symbol	Parameter	Conditions	Min	Typ	Max	Unit
FB Pin						
FB_{TH}	FB Threshold	V_{FB} rising	**1.141**	1.167	**1.19**	V
FB_{HYS}	FB Hysteresis Current		**-31**	-24	**-18**	µA
FB_{LEAK}	Off Leakage Current	V_{FB} = 1V			**1**	µA
Power Limit (PWR Pin)						
PWR_{LIM}	Power limit sense voltage (VIN-SENSE)	SENSE-OUT = 12V, R_{PWR} = 25 kΩ	**9**	12.5	**15**	mV
I_{PWR}	PWR pin current	V_{PWR} = 2.5V		-10		µA
$R_{SAT(PWR)}$	PWR pin impedance when disabled	UVLO = 0.7V		180		Ω
Gate Control (GATE Pin)						
I_{GATE}	Source current	Normal operation	**-28**	-22	**-16**	µA
	Fault Sink current	UVLO = 1V	**1.5**	2	**2.5**	mA
	POR Circuit Breaker sink current	VIN - SENSE = 150 mV or VIN < R_{POR}, V_{GATE} = 5V	**105**	190	**275**	mA
V_{GATE}	Gate output voltage in normal operation	GATE voltage with respect to ground	**17**	18.8	**20.3**	V
OUT Pin						
I_{OUT-EN}	OUT bias current, enabled	OUT = VIN, normal operation		16		µA
$I_{OUT-DIS}$	OUT bias current, disabled (2)	Disabled, OUT = 0V, SENSE = VIN		-12		µA
Current Limit						
V_{CL}	Threshold voltage	CL = GND	**22.5**	25	**27.5**	mV
		CL = GND, T_J = 10°C to 85°C	**23**	25	**27**	
		CL = VDD	**41**	46	**52**	
t_{CL}	Response time	VIN-SENSE stepped from 0 mV to 80 mV		1.2		µs
I_{SENSE}	SENSE input current	Enabled, SENSE = OUT		33		µA
		Disabled, OUT = 0V		46		
		Enabled, OUT = 0V		45		
Circuit Breaker						
V_{CB}	Threshold voltage x 1.8	VIN - SENSE, CL = GND, CB = GND	**35**	45	**55**	mV
	CB:CL Ratio	CB = GND	**1.6**	1.8	**2**	
V_{CB}	Threshold voltage x 3.6	VIN - SENSE, CL = GND, CB = VDD	**70**	90	**110**	mV
	CB:CL Ratio	CB = VDD	**3.1**	3.6	**4**	
t_{CB}	Response time	VIN - SENSE stepped from 0 mV to 150 mV, time to GATE low, no load		0.6	**1.2**	µs
Timer (TIMER pin)						
V_{TMRH}	Upper threshold		**1.54**	1.7	**1.85**	V
V_{TMRL}	Lower threshold	Restart cycles	**0.85**	1.0	**1.07**	V
		End of 8th cycle		0.3		V
		Re-enable threshold		0.3		V
I_{TIMER}	Insertion time current	TIMER pin = 2V	**-8**	-5.5	**-3**	µA
	Sink current, end of insertion time		**1.4**	1.9	**2.4**	mA
	Fault detection current		**-120**	-90	**-60**	µA
	Fault sink current			2.8		µA
DC_{FAULT}	Fault Restart Duty Cycle			0.67		%
t_{FAULT_DELAY}	Fault to GATE low delay	TIMER pin reaches the upper threshold		17		µs

(2) OUT bias current (disabled) due to leakage current through an internal 0.9 MΩ resistance from SENSE to VOUT.

Copyright © 2012–2013, Texas Instruments Incorporated

Electrical Characteristics (continued)

Limits in standard type are for T_J = 25°C only; limits in boldface type apply over the junction temperature (T_J) range of -40°C to +85°C unless otherwise stated. Minimum and Maximum limits are specified through test, design, or statistical correlation. Typical values represent the most likely parametric norm at T_J = 25°C, and are provided for reference purposes only. Unless otherwise stated the following conditions apply: VIN = 12V. See [1] and

Symbol	Parameter	Conditions	Min	Typ	Max	Unit
Internal Reference						
V_{REF}	Reference Voltage		**2.703**	2.73	**2.757**	V
ADC and MUX						
	Resolution			12		Bits
INL	Integral Non-Linearity	ADC only		+/-1		LSB
t_{AQUIRE}	Acquisition + Conversion Time	Any channel		100		µs
t_{RR}	Acquisition Round Robin Time	Cycle all channels		1		ms
IIN_{FSR}	Current input full scale range	CL = GND		30.2		mV
		CL = VDD		60.4		mV
IIN_{LSB}	Current input LSB	CL = GND		7.32		µV
		CL = VDD		14.64		µV
$VAUX_{FSR}$	VAUX input full scale range			1.16		V
$VAUX_{LSB}$	VAUX input LSB			283.2		µV
VIN_{FSR}	Input voltage full scale range			18.7		V
VIN_{LSB}	Input voltage LSB			4.54		mV

Copyright © 2012–2013, Texas Instruments Incorporated

Electrical Characteristics (continued)

Limits in standard type are for T_J = 25°C only; limits in boldface type apply over the junction temperature (T_J) range of -40°C to +85°C unless otherwise stated. Minimum and Maximum limits are specified through test, design, or statistical correlation. Typical values represent the most likely parametric norm at T_J = 25°C, and are provided for reference purposes only. Unless otherwise stated the following conditions apply: VIN = 12V. See (1) and

Symbol	Parameter	Conditions	Min	Typ	Max	Unit
Telemetry Accuracy LM25066IA						
IIN_{ACC}	Input Current Accuracy	VIN – SENSE = 25mV, CL = GND T_J = 10°C to 85°C	**-1**		**+1**	%
		VIN – SENSE = 25mV, CL = GND	**-1.2**		**+1**	
		VIN – SENSE = 50mV, CL = VDD	**-1.8**		**+1.8**	
		VIN- SENSE= 5mV, CL= GND T_J = 10°C to 85°C	**-5**		**+5**	
V_{ACC}	VAUX, VIN, VOUT Accuracy	VIN, VOUT = 12V VAUX = 1V T_J = 10°C to 85°C	**-1**		**+1**	%
		VIN, VOUT = 12V VAUX = 1V	**-1**		**+1.2**	
PIN_{ACC}	Input Power Accuracy	VIN = 12V, VIN – SENSE = 25mV, CL = GND	**-2.0**		**+2.0**	%
Telemetry Accuracy LM25066I						
IIN_{ACC}	Input Current Accuracy	VIN – SENSE = 25mV, CL = GND	**-2.7**		**+2.4**	%
		VIN – SENSE = 25mV, CL = GND T_J = 10°C to 85°C	**-2.4**		**+2.4**	
V_{ACC}	VAUX, VIN, VOUT Accuracy	VIN, VOUT = 12V VAUX = 1V	**-1.6**		**+1.4**	%
		VIN, VOUT = 12V VAUX = 1V T_J = 10°C to 85°C	**-1.4**		**+1.4**	
PIN_{ACC}	Input Power Accuracy	VIN = 12V, VIN – SENSE = 25mV, CL = GND	**-3.0**		**+3.0**	%
Remote Diode Temperature Sensor						
T_{ACC}	Temperature Accuracy Using Local Diode	T_A = 10°C to 85°C		2	**10**	°C
	Remote Diode Resolution			9		bits
I_{DIODE}	External Diode Current Source	High level		250	**300**	µA
		Low level		9.4		µA
	Diode Current Ratio			26		
PMBus Pin Thresholds ($\overline{SMBA}$, SDA, SCL)						
V_{IL}	Data, Clock Input Low Voltage				**0.8**	V
V_{IH}	Data, Clock Input High Voltage		**2.1**		**5.5**	V
V_{OL}	Data Output Low Voltage	I_{PULLUP} = 4mA	**0**		**0.4**	V
I_{LEAK}	Input Leakage Current	SDA, $\overline{SMBA}$, SCL = 5V			**1**	µA
CL	Pin Capacitance	SDA, SCL		5		pF
Configuration Pin Thresholds (CB, CL, $\overline{RETRY}$)						
V_{IH}	Threshold Voltage		**3**			V
I_{LEAK}	Input Leakage Current	CL, CB, $\overline{RETRY}$ = 5V			**1**	mA
Thermal (3)						
θ_{JA}	Junction to Ambient			42.3		°C/W
θ_{JC}	Junction to Case			9.5		°C/W

(3) Junction-to-ambient thermal resistance is highly application and board layout dependent. Specified thermal resistance values for the package specified is based on a 4-layer, 4"x3", 2/1/1/2 oz. Cu board as per JEDEC standards is used.

Copyright © 2012–2013, Texas Instruments Incorporated

Typical Performance Characteristics

Unless otherwise specified the following conditions apply: T_J = 25°C, V_{IN} = 12V. All graphs show junction temperature.

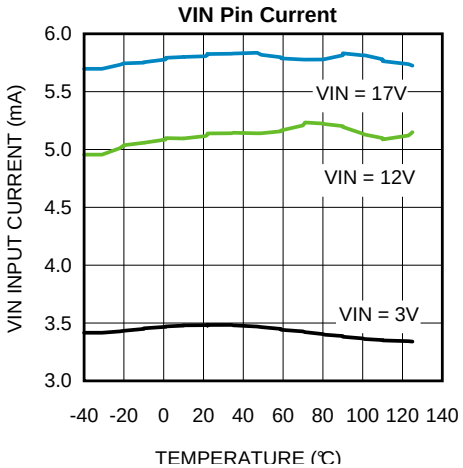

Figure 1.

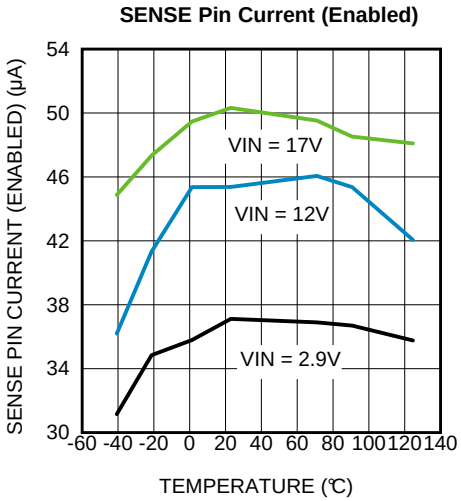

Figure 2.

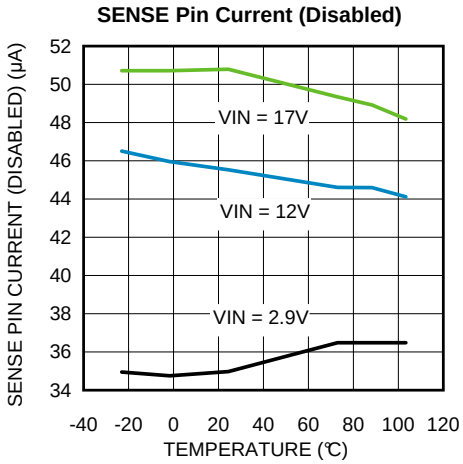

Figure 3.

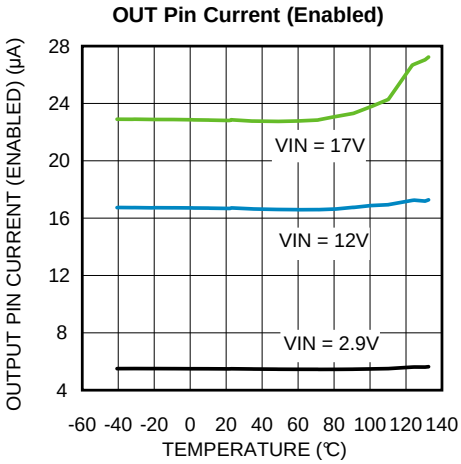

Figure 4.

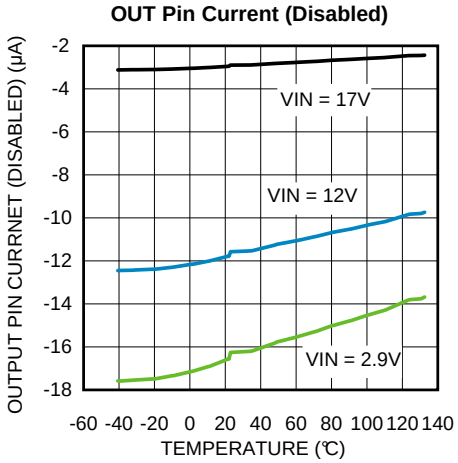

Figure 5.

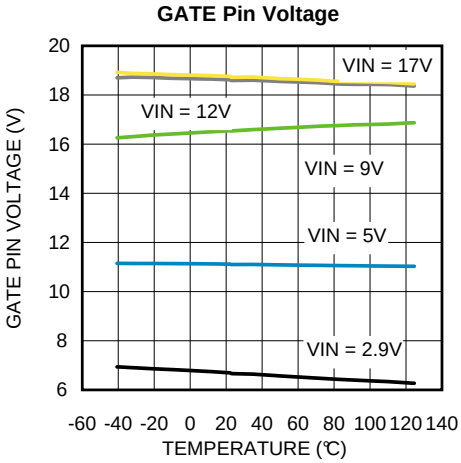

Figure 6.

Copyright © 2012–2013, Texas Instruments Incorporated

Typical Performance Characteristics (continued)

Unless otherwise specified the following conditions apply: T_J = 25°C, V_{IN} = 12V. All graphs show junction temperature.

GATE Pin Source Current

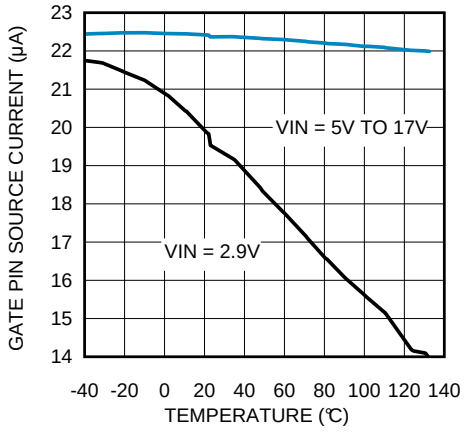

Figure 7.

Power Limit Threshold

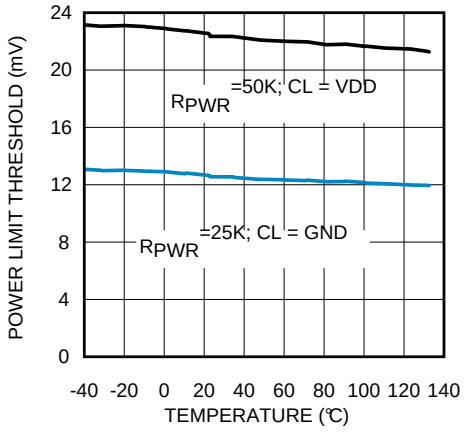

Figure 8.

PGD Low Voltage

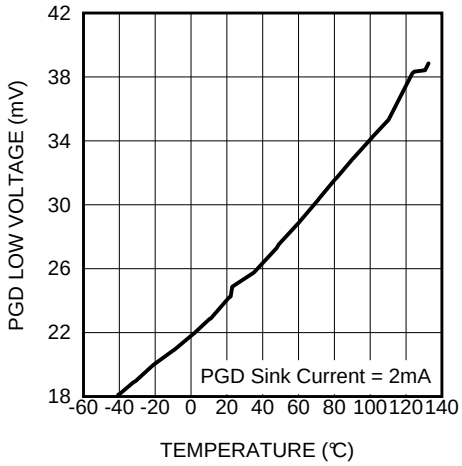

Figure 9.

UVLO Threshold

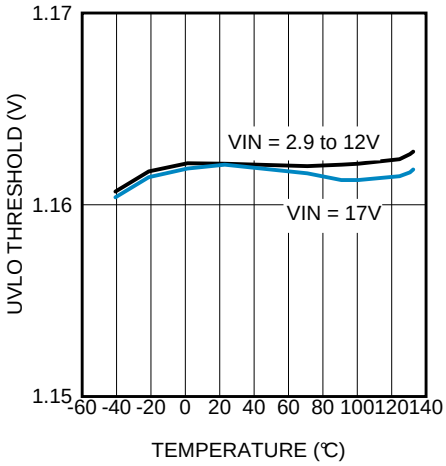

Figure 10.

UVLO Hysteresis Current

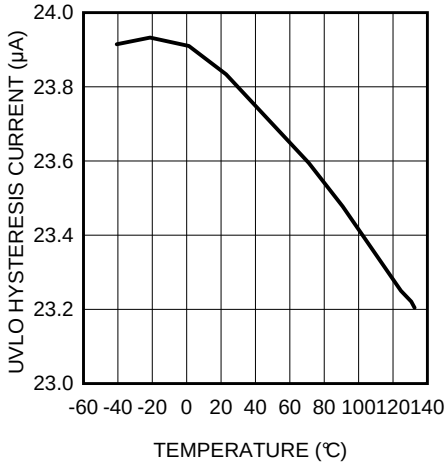

Figure 11.

FB Threshold

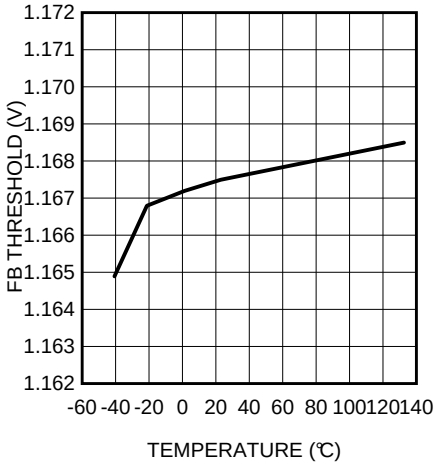

Figure 12.

Typical Performance Characteristics (continued)

Unless otherwise specified the following conditions apply: T_J = 25°C, V_{IN} = 12V. All graphs show junction temperature.

OVLO Threshold

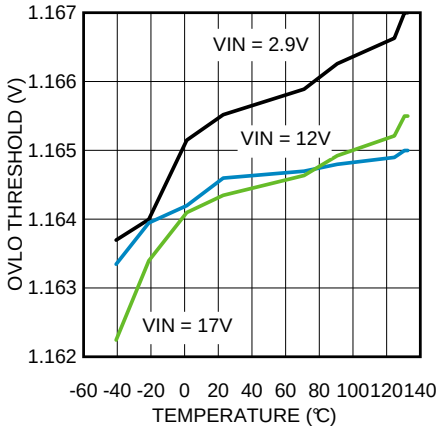

Figure 13.

OVLO Hysteresis

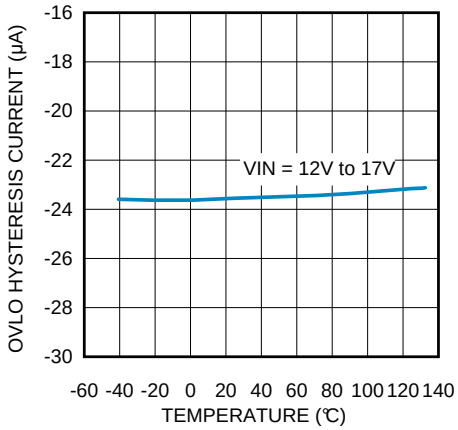

Figure 14.

FB Pin Hysteresis

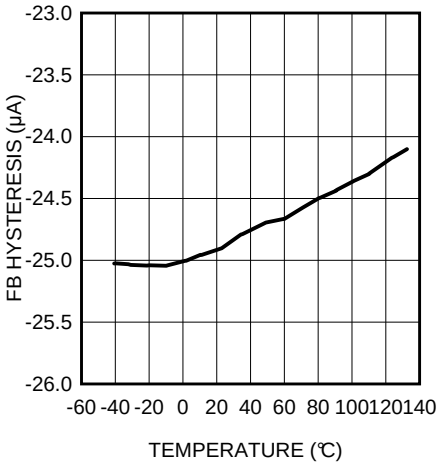

Figure 15.

Current Limit Threshold

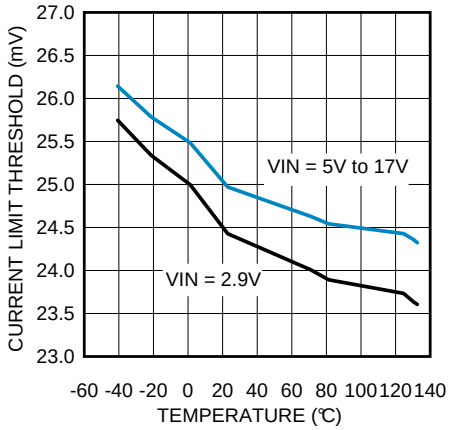

Figure 16.

Current Limit Threshold

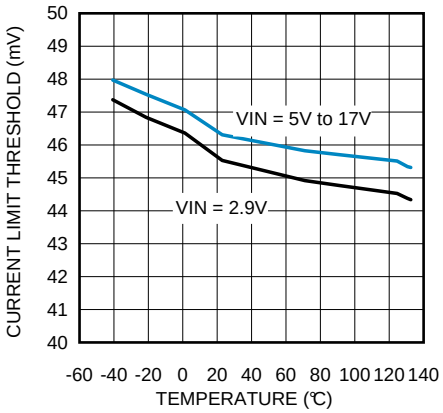

Figure 17.

Circuit Breaker Threshold (CL = VDD)

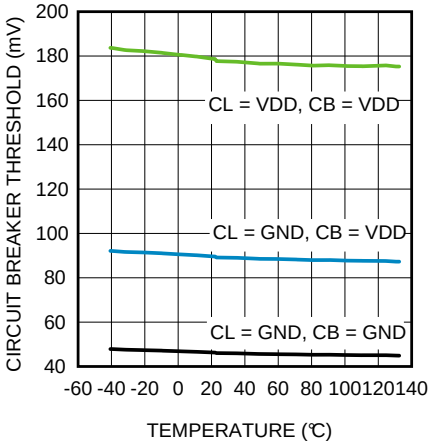

Figure 18.

Copyright © 2012–2013, Texas Instruments Incorporated

Typical Performance Characteristics (continued)

Unless otherwise specified the following conditions apply: T_J = 25°C, V_{IN} = 12V. All graphs show junction temperature.

Reference Voltage

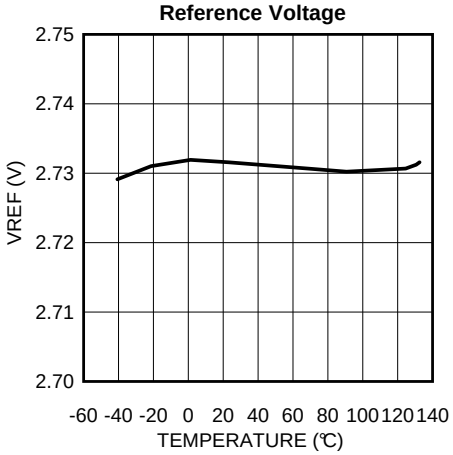

Figure 19.

Startup (Insertion Delay)

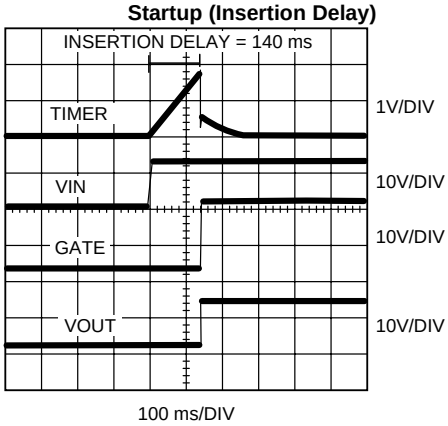

Figure 20.

Startup (Short circuit V_{OUT})

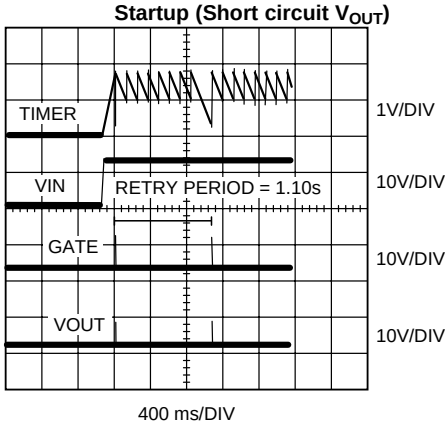

Figure 21.

Startup (5A Load)

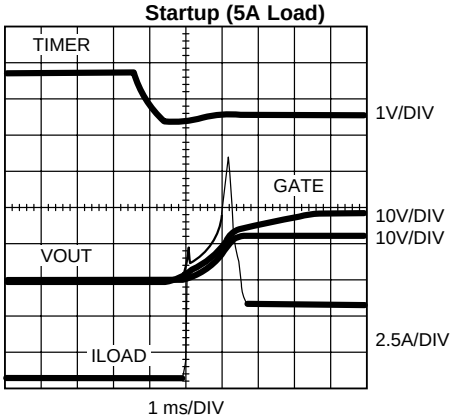

Figure 22.

Startup (UVLO, OVLO)

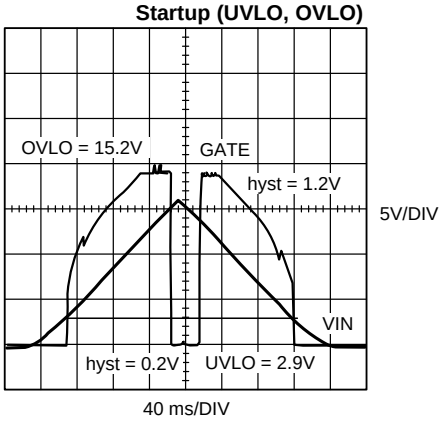

Figure 23.

Startup (PGOOD)

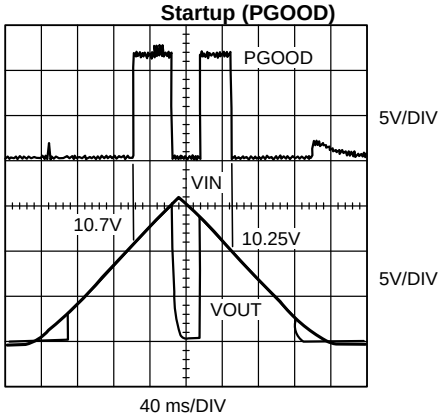

Figure 24.

Typical Performance Characteristics (continued)

Unless otherwise specified the following conditions apply: T_J = 25°C, V_{IN} = 12V. All graphs show junction temperature.

Current Limit Event (CL = GND)

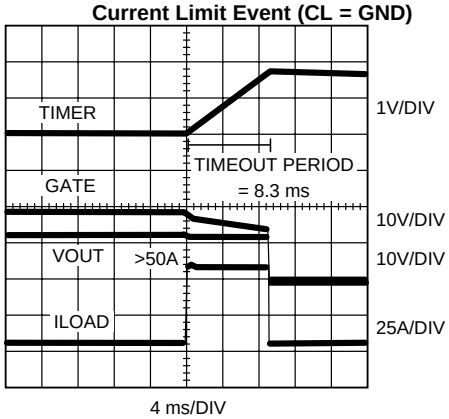

Figure 25.

Circuit Breaker Event (CL = CB = GND)

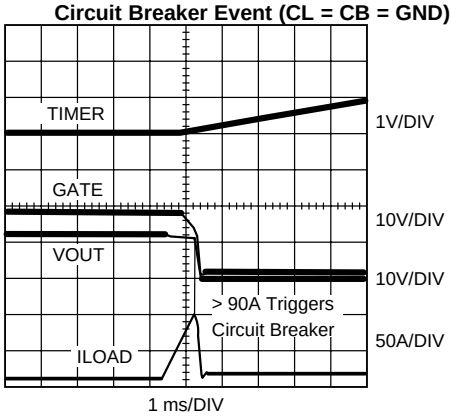

Figure 26.

Retry Event (Retry = GND)

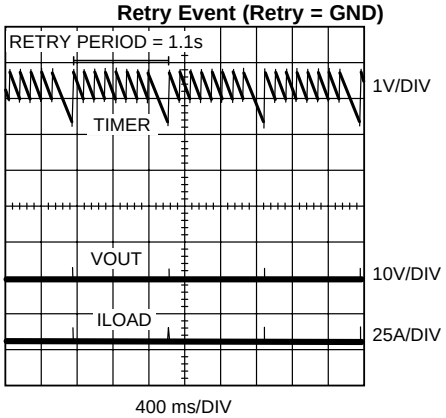

Figure 27.

Latch Off (Retry = VDD)

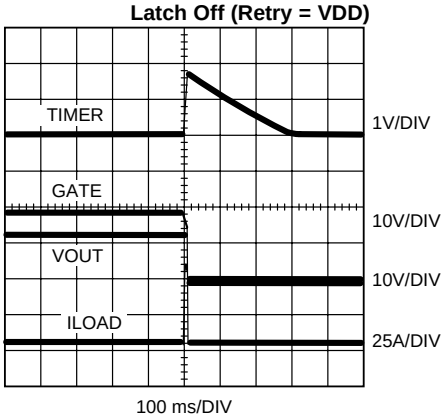

Figure 28.

IIN Measurement Accuracy (VIN - SENSE = 25 mV)

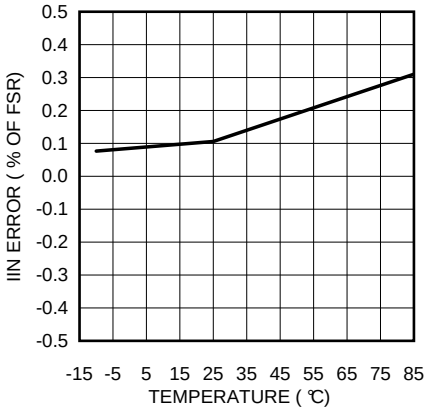

Figure 29.

PIN Measurement Accuracy (VIN - SENSE = 25 mV)

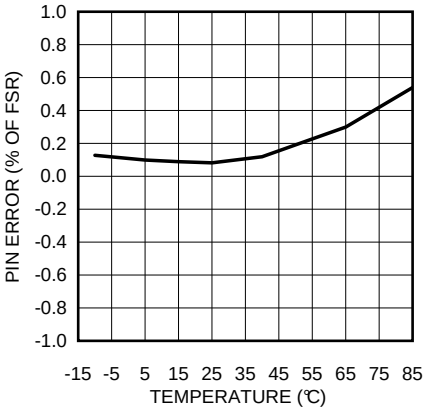

Figure 30.

Copyright © 2012–2013, Texas Instruments Incorporated

BLOCK DIAGRAM

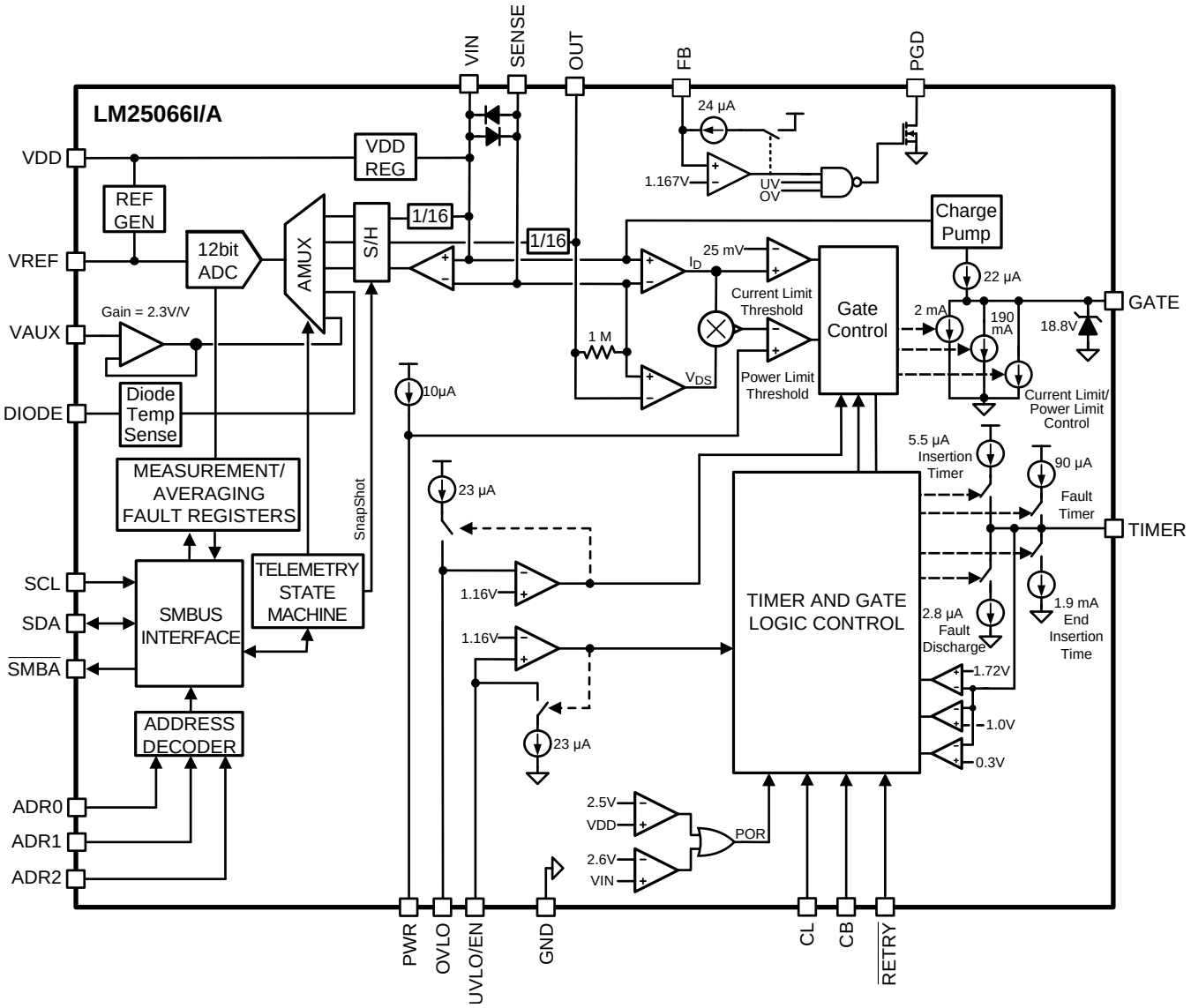

FUNCTIONAL DESCRIPTION

The inline protection functionality of the LM25066I/A is designed to control the in-rush current to the load upon insertion of a circuit card into a live backplane or other "hot" power source, thereby limiting the voltage sag on the backplane's supply voltage and the dV/dt of the voltage applied to the load. Effects on other circuits in the system are minimized, preventing possible unintended resets. A controlled shutdown when the circuit card is removed can also be implemented using the LM25066I/A.

In addition to a programmable current limit, the LM25066I/A monitors and limits the maximum power dissipation in the series pass device to maintain operation within the device Safe Operating Area (SOA). Either current limiting or power limiting for an extended period of time results in the shutdown of the series pass device. In this event, the LM25066I/A can latch off or repetitively retry based on the hardware setting of the $\overline{\text{RETRY}}$ pin. Once started, the number of retries can be set to none, 1, 2, 4, 8, 16, or infinite. The circuit breaker function quickly switches off the series pass device upon detection of a severe over-current condition. Programmable under-voltage lockout (UVLO) and over-voltage lockout (OVLO) circuits shut down the LM25066I/A when the system input voltage is outside the desired operating range.

The telemetry capability of the LM25066I/A provides intelligent monitoring of the input voltage, output voltage, input current, input power, temperature, and an auxiliary input. The LM25066I/A also provides a peak capture of the input power and programmable hardware averaging of the input voltage, current, power, and output voltage. Warning thresholds which trigger the $\overline{\text{SMBA}}$ pin may be programmed for input and output voltage, current, power and temperature via the PMBus interface. Additionally, the LM25066I/A is capable of detecting damage to the external MOSFET, Q_1.

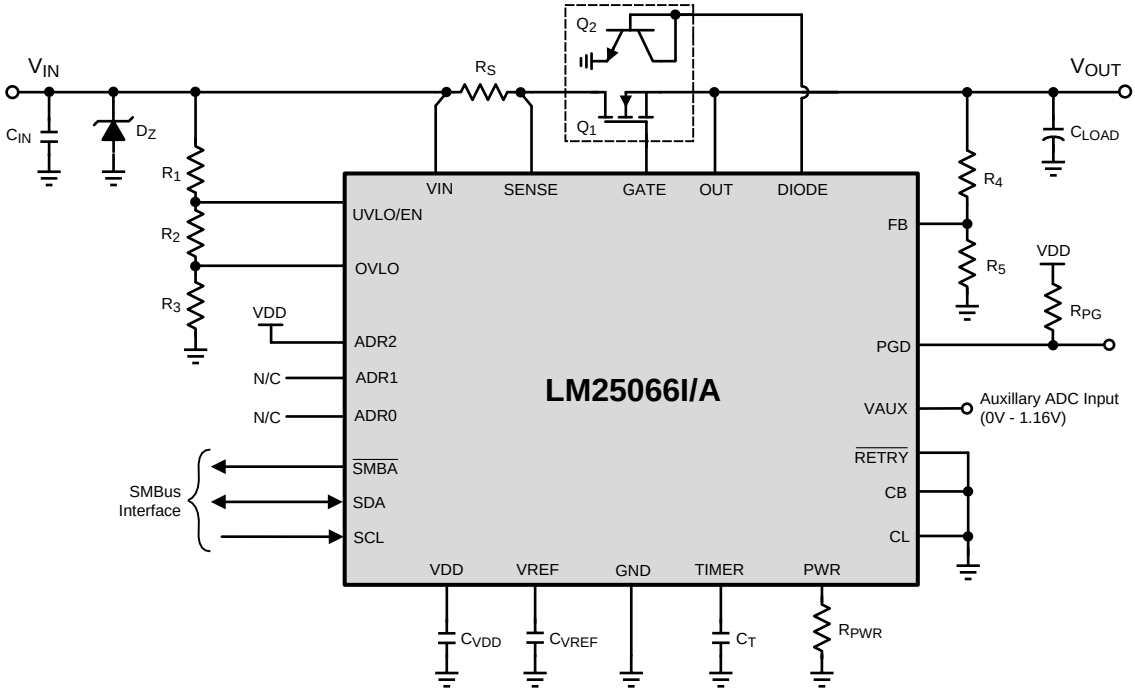

Figure 31. Typical Application Circuit

Power Up Sequence

The VIN operating range of the LM25066I/A is +2.9V to +17V, with transient capability to +24V. Referring to Figure 31 and Figure 32, as the voltage at VIN initially increases, the external N-channel MOSFET (Q_1) is held off by an internal 190 mA pulldown current at the GATE pin. The strong pulldown current at the GATE pin prevents an inadvertent turn-on as the MOSFET's gate-to-drain (Miller) capacitance is charged. Additionally, the TIMER pin is initially held at ground. When the V_{IN} voltage reaches the POR threshold, the insertion time begins. During the insertion time, the capacitor at the TIMER pin (C_T) is charged by a 5.5 µA current source and Q_1 is held off by a 2 mA pulldown current at the GATE pin regardless of the input voltage. The insertion time delay allows ringing and transients at VIN to settle before Q_1 is enabled. The insertion time ends when the TIMER pin

 Copyright © 2012–2013, Texas Instruments Incorporated

voltage reaches 1.7V. C_T is then quickly discharged by an internal 1.9 mA pulldown current. The GATE pin then switches on Q_1 when V_{SYS}, the input supply voltage, exceeds the UVLO threshold. If V_{SYS} is above the UVLO threshold at the end of the insertion time, Q_1 switches on at that time. The GATE pin charge pump sources 22 µA to charge the gate capacitance of Q_1. The maximum voltage at the GATE pin with respect to ground is limited by an internal 18.8V zener diode.

As the voltage at the OUT pin increases, the LM25066I/A monitors the drain current and power dissipation of MOSFET Q_1. Inrush current limiting and/or power limiting circuits actively control the current delivered to the load. During the inrush limiting interval (t_2 in Figure 32), an internal 90 µA fault timer current source charges C_T. If Q_1's power dissipation and the input current reduce below their respective limiting thresholds before the TIMER pin reaches 1.7V, the 90 µA current source is switched off and C_T is discharged by the internal 2.8 µA current sink (t_3 in Figure 32). The PGD pin switches high when FB exceeds its rising threshold of 1.167V.

If the TIMER pin voltage reaches 1.7V before inrush current limiting or power limiting ceases during t_2, a fault is declared and Q_1 is turned off. See Fault Timer and Restart for a complete description of the fault mode.

The LM25066I/A will pull the $\overline{\text{SMBA}}$ pin low after the input voltage has exceeded its POR threshold to indicate that the volatile memory and device settings are in their default state. The CONFIG_PRESET bit within the STATUS_MFR_SPECIFIC register (80h) indicates default configuration of warning thresholds and device operation and will remain set until a CLEAR_FAULTS command is received.

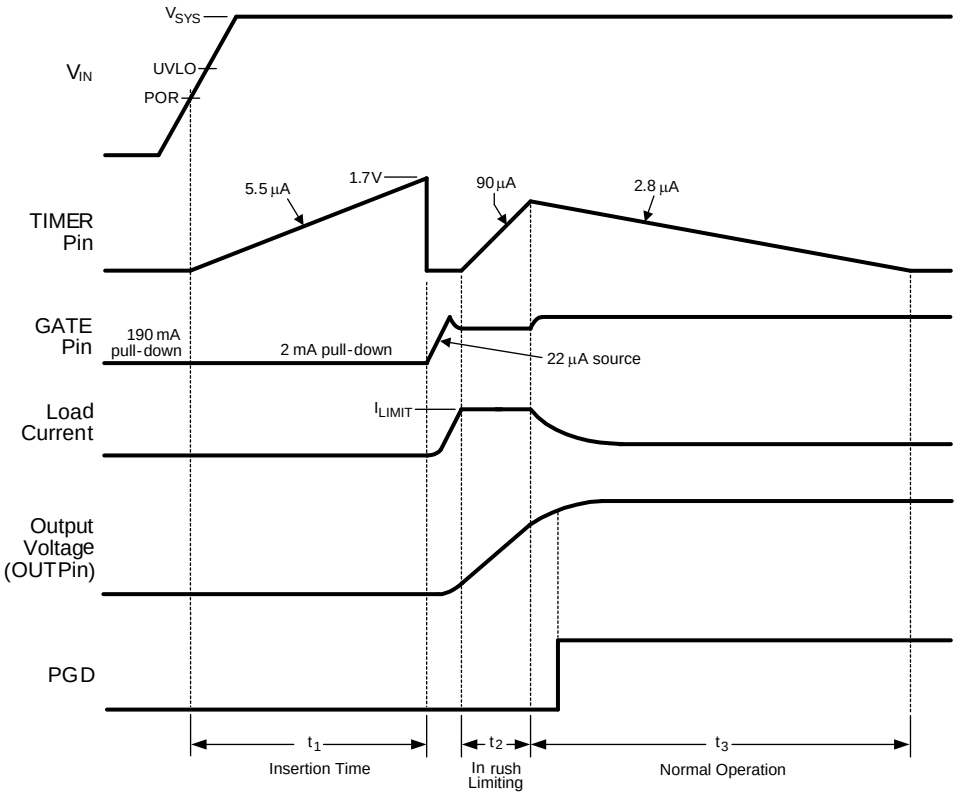

Figure 32. Power Up Sequence (Current Limit Only)

Gate Control

A charge pump provides the voltage at the GATE pin to enhance the N-Channel MOSFET's gate. During normal operating conditions (t_3 in)Figure 32) the gate of Q_1 is held charged by an internal 22 µA current source. The voltage at the GATE pin (with respect to ground) is limited by an internal 18.8 V zener diode. See the graph "GATE Pin Voltage" shown previously. Since the gate-to-source voltage applied to Q_1 could be as high as 18.8 V during various conditions, a zener diode with the appropriate voltage rating must be added between the GATE and OUT pins if the maximum V_{GS} rating of the selected MOSFET is less than 18.8 V. The external zener diode must have a forward current rating of at least 190 mA. When the system voltage is initially applied, the GATE pin is held low by a 190 mA pulldown current. This helps prevent an inadvertent turn-on of the MOSFET through its drain-gate capacitance as the applied system voltage increases.

During the insertion time (t_1 in Figure 32) the GATE pin is held low by a 2 mA pulldown current. This maintains Q_1 in the off-state until the end of t_1, regardless of the voltage at VIN or UVLO. Following the insertion time (t_2 in Figure 32), the gate voltage of Q_1 is controlled to keep the current or power dissipation level from exceeding the programmed levels. While in the current or power limiting mode, the TIMER pin capacitor is charging. If the current and power limiting cease before the TIMER pin reaches 1.7V, the TIMER pin capacitor then discharges, and the circuit begins normal operation. If the inrush limiting condition persists such that the TIMER pin reached 1.7V during t_2, the GATE pin is then pulled low by the 190 mA pulldown current. The GATE pin is then held low until either a power up sequence is initiated ($\overline{\text{RETRY}}$ pin to VDD), or an automatic retry is attempted ($\overline{\text{RETRY}}$ pin to GROUND). See Fault Timer and Restart. If the system input voltage falls below the UVLO threshold or rises above the OVLO threshold, the GATE pin is pulled low by the 2 mA pulldown current to switch off Q_1.

Current Limit

The current limit threshold is reached when the voltage across the sense resistor R_S (VIN to SENSE) exceeds the internal voltage limit of 25 mV or 46 mV depending on whether the CL pin is connected to GND or VDD, respectively. In the current limiting condition, the GATE voltage is controlled to limit the current in MOSFET Q_1. While the current limit circuit is active, the fault timer is active as described in Fault Timer and Restart. If the load current falls below the current limit threshold before the end of the Fault Timeout Period, the LM25066I/A resumes normal operation. If the current limit condition persists for longer than the Fault Timeout Period set by the timer capacitor, C_T, the IIN OC FAULT bit in the STATUS_INPUT (7Ch) register, the INPUT bit in the STATUS_WORD (79h) register, and the IIN_OC/PFET_OP_FAULT bit in the DIAGNOSTIC_WORD (E1h) register will be toggled high and $\overline{\text{SMBA}}$ pin will be pulled low unless this feature is disabled using the ALERT_MASK (D8h) register. For proper operation, the R_S resistor value should be less than 200 mΩ. Higher values may create instability in the current limit control loop. The current limit threshold pin value may be overridden by setting appropriate bits in the DEVICE_SETUP register (D9h).

Circuit Breaker

If the load current increases rapidly (e.g. the load is short circuited), the current in the sense resistor (R_S) may exceed the current limit threshold before the current limit control loop is able to respond. If the current exceeds 1.8 or 3.6 times (user settable) the current limit threshold, Q_1 is quickly switched off by the 190 mA pulldown current at the GATE pin, and a Fault Timeout Period begins. When the voltage across R_S falls below the threshold the 190 mA pulldown current at the GATE pin is switched off and the gate voltage of Q_1 is then determined by the current limit or power limit functions. If the TIMER pin reaches 1.7V before the current limiting or power limiting condition ceases, Q_1 is switched off by the 2 mA pulldown current at the GATE pin as described in Fault Timer and Restart. A circuit breaker event will cause the CIRCUIT BREAKER FAULT bit in the STATUS_MFR_SPECIFIC (80h) and DIAGNOSTIC_WORD (E1h) registers to be toggled high and $\overline{\text{SMBA}}$ pin will be pulled low unless this feature is disabled using the ALERT_MASK (D8h) register. The circuit breaker pin configuration may be overridden by setting appropriate bits in the DEVICE_SETUP (D9h) register.

Power Limit

An important feature of the LM25066I/A is the MOSFET power limiting. The Power Limit function can be used to maintain the maximum power dissipation of MOSFET Q_1 within the device SOA rating. The LM25066I/A determines the power dissipation in Q_1 by monitoring its drain-source voltage (SENSE to OUT), and the drain current through R_S (VIN to SENSE). The product of the current and voltage is compared to the power limit threshold programmed by the resistor at the PWR pin. If the power dissipation reaches the limiting threshold, the GATE voltage is controlled to regulate the current in Q_1. While the power limiting circuit is active, the fault timer is

Copyright © 2012–2013, Texas Instruments Incorporated

active as described in Fault Timer and Restart. If the power limit condition persists for longer than the Fault Timeout Period set by the timer capacitor, C_T, the IIN_OC_FAULT bit in the STATUS_INPUT (7Ch) register, the INPUT bit in the STATUS_WORD (79h) register, and the IIN_OC/PFET_OP_FAULT bit in the DIAGNOSTIC_WORD (E1h) register will be toggled high and $\overline{\text{SMBA}}$ pin will be pulled low unless this feature is disabled using the ALERT_MASK (D8h) register.

Fault Timer and Restart

When the current limit or power limit threshold is reached during turn-on, or as a result of a fault condition, the gate-to-source voltage of Q_1 is controlled to regulate the load current and power dissipation in Q_1. When either limiting function is active, a 90 µA fault timer current source charges the external capacitor (C_T) at the TIMER pin as shown in Figure 32 (Fault Timeout Period). If the fault condition subsides during the Fault Timeout Period before the TIMER pin reaches 1.7V, the LM25066I/A returns to the normal operating mode and C_T is discharged by the 1.9 mA current sink. If the TIMER pin reaches 1.7V during the Fault Timeout Period, Q_1 is switched off by a 2 mA pulldown current at the GATE pin. The subsequent restart procedure then depends on the selected retry configuration.

If the $\overline{\text{RETRY}}$ pin is high, the LM25066I/A latches the GATE pin low at the end of the Fault Timeout Period. C_T is then discharged to ground by the 2.8 µA fault current sink. The GATE pin is held low by the 2 mA pulldown current until a power up sequence is externally initiated by cycling the input voltage (V_{SYS}), or momentarily pulling the UVLO/EN pin below its threshold with an open-collector or open-drain device as shown in Figure 33. The voltage at the TIMER pin must be <0.3V for the restart procedure to be effective. The TIMER_LATCHED_OFF bit in the DIAGNOSTIC_WORD (E1h) register will remain high while the latched off condition persists.

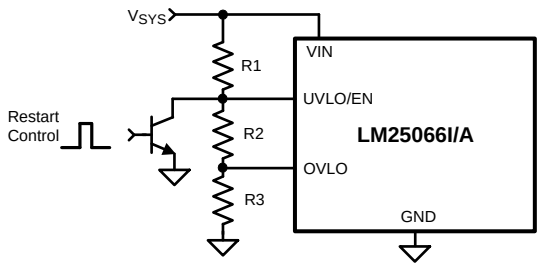

Figure 33. Latched Fault Restart Control

The LM25066I/A provides an automatic restart sequence which consists of the TIMER pin cycling between 1.7V and 1V seven times after the Fault Timeout Period, as shown in Figure 34. The period of each cycle is determined by the 90 µA charging current, and the 2.8 µA discharge current, and the value of the capacitor C_T. When the TIMER pin reaches 0.3V during the eighth high-to-low ramp, the 22 µA current source at the GATE pin turns on Q_1. If the fault condition is still present, the Fault Timeout Period and the restart sequence repeat. The $\overline{\text{RETRY}}$ pin allows selecting no retries or infinite retries. Finer control of the retry behavior can be achieved through the DEVICE_SETUP (D9h) register. Retry counts of 0, 1, 2, 4, 8, 16 or infinite may be selected by setting the appropriate bits in the DEVICE_SETUP (D9h) register.

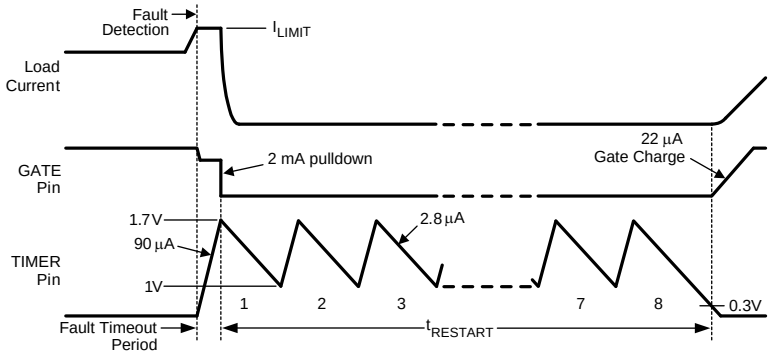

Figure 34. Restart Sequence

Under-Voltage Lockout (UVLO)

The series pass MOSFET (Q_1) is enabled when the input supply voltage (V_{SYS}) is within the operating range defined by the programmable under-voltage lockout (UVLO) and over-voltage lockout (OVLO) levels. Typically the UVLO level at V_{SYS} is set with a resistor divider (R1-R3) as shown in Figure 35. Refering to the Block Diagram when V_{SYS} is below the UVLO level, the internal 23 µA current source at UVLO is enabled, the current source at OVLO is off, and Q_1 is held off by the 2 mA pulldown current at the GATE pin. As V_{SYS} is increased, raising the voltage at UVLO above its threshold the 23 µA current source at UVLO is switched off, increasing the voltage at UVLO, providing hysteresis for this threshold. With the UVLO/EN pin above its threshold, Q_1 is switched on by the 22 µA current source at the GATE pin if the insertion time delay has expired.

See Applications Section for a procedure to calculate the values of the threshold setting resistors (R1-R3). The minimum possible UVLO level at V_{SYS} can be set by connecting the UVLO/EN pin to VIN. In this case, Q_1 is enabled after the insertion time when the voltage at VIN reaches the POR threshold. After power up, an UVLO condition will toggle high the VIN UV FAULT bit in the STATUS_INPUT (7Ch), the INPUT bit in the STATUS_WORD register, and the VIN_UNDERVOLTAGE_FAULT bit in the DIAGNOSTIC_WORD (E1h) register, and $\overline{\text{SMBA}}$ pin will be pulled low unless this feature is disabled using the ALERT_MASK (D8h) register.

Over-Voltage Lockout (OVLO)

The series pass MOSFET (Q_1) is enabled when the input supply voltage (V_{SYS}) is within the operating range defined by the programmable under-voltage lockout (UVLO) and over-voltage lockout (OVLO) levels. If V_{SYS} raises the OVLO pin voltage above its threshold, Q_1 is switched off by the 2 mA pulldown current at the GATE pin, denying power to the load. When the OVLO pin is above its threshold, the internal 23 µA current source at OVLO is switched on, raising the voltage at OVLO to provide threshold hysteresis. When V_{SYS} is reduced below the OVLO level, Q_1 is re-enabled. An OVLO condition will toggle high the VIN OV FAULT bit in the STATUS_INPUT (7Ch), the INPUT bit in the STATUS_WORD register, and the VIN_OVERVOLTAGE_FAULT bit in the DIAGNOSTIC_WORD (E1h) register, and the $\overline{\text{SMBA}}$ pin will be pulled low unless this feature is disabled using the ALERT_MASK (D8h) register.

See Applications Section for a procedure to calculate the threshold setting resistor values.

Shutdown Control

The load current can be remotely switched off by taking the UVLO/EN pin below its threshold with an open collector or open drain device, as shown in Figure 35. Upon releasing the UVLO/EN pin, the LM25066I/A switches on the load current with inrush current and power limiting.

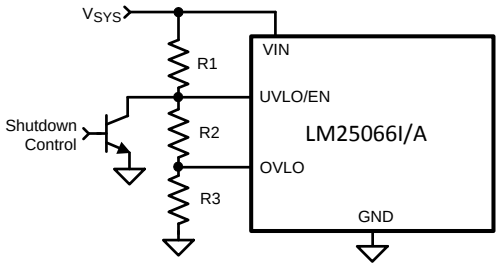

Figure 35. Shutdown Control

Power Good

The Power Good indicator (PGD) is connected to the drain of an internal N-channel MOSFET capable of sustaining 17V in the off-state, and transients up to 20V. An external pullup resistor is required at PGD to an appropriate voltage to indicate the status to downstream circuitry. The off-state voltage at the PGD pin can be higher or lower than the voltages at VIN and OUT. PGD is switched high when the voltage at the FB pin exceeds the PGD threshold voltage. Typically, the output voltage threshold is set with a resistor divider from output to feedback, although the monitored voltage need not be the output voltage. Any other voltage can be monitored as long as the voltage at the FB pin does not exceed its maximum rating. Referring to the Block Diagram, when the

Copyright © 2012–2013, Texas Instruments Incorporated

voltage at the FB pin is below its threshold, the 24 µA current source at FB is disabled. As the output voltage increases, taking FB above its threshold, the current source is enabled, sourcing current out of the pin, raising the voltage at FB to provide threshold hysteresis. The PGD output is forced low when either the UVLO/EN pin is below its threshold or the OVLO pin is above its threshold. The status of the PGD pin can be read via the PMBus interface in either the STATUS_WORD (79h) or DIAGNOSTIC_WORD (E1h) registers.

VDD Sub-Regulator

The LM25066I/A contains an internal linear sub-regulator which steps down the input voltage to generate a 4.5V rail used for powering low voltage circuitry. When the input voltage is below 4.5V, VDD will track VIN. For input voltages 3.3V and below, VDD should be tied directly to VIN to avoid the dropout of the sub-regulator. The VDD sub-regulator should be used as the pullup supply for the CL, CB, $\overline{\text{RETRY}}$, ADR2, ADR1, ADR0 pins if they are to be tied high. It may also be used as the pullup supply for the PGD and the SMBus signals (SDA, SCL, $\overline{\text{SMBA}}$). The VDD sub-regulator is not designed to drive high currents and should not be loaded with other integrated circuits. The VDD pin is current limited to 45mA in order to protect the LM25066I/A in the event of a short. The sub-regulator requires a bypass capacitance having a value between 1 µF and 4.7 µF to be placed as close to the VDD pin as the PCB layout allows.

Remote Temperature Sensing

The LM25066I/A is designed to measure temperature remotely using an MMBT3904 NPN transistor. The base and collector of the MMBT3904 is connected to the DIODE pin and the emitter is grounded. Place the MMBT3904 near the device whose temperature is to be monitored. If the temperature of the hot-swap pass MOSFET, Q_1, is to be measured, the MMBT3904 should be placed as close to Q_1 as the layout allows. The temperature is measured by means of a change in the diode voltage in response to a step in current supplied by the DIODE pin. The DIODE pin sources a constant 9.4 µA but pulses 250 µA once every millisecond in order to measure the diode temperature. Care must be taken in the PCB layout to keep the parasitic resistance between the DIODE pin and the MMBT3904 low so as not to degrade the measurement. Additionally, a small 1000 pF bypass capacitor should be placed in parallel with the MMBT3904 to reduce the effects of noise. The temperature can be read using the READ_TEMPERATURE_1 PMBus command (8Dh). The default limits of the LM25066I/A will cause $\overline{\text{SMBA}}$ pin to be pulled low if the measured temperature exceeds 125°C and will disable the hot-swap pass MOSFET if the temperature exceeds 150°C. These thresholds can be reprogrammed via the PMBus interface using the OT_WARN_LIMIT (51h) and OT_FAULT_LIMIT (4Fh) commands. If the temperature measurement and protection capability of the LM25066I/A is not used, the DIODE pin should be grounded.

Damaged MOSFET Detection

The LM25066I/A is able to detect whether the external MOSFET, Q_1, is damaged under certain conditions. If the voltage across the sense resistor exceeds 4mV while the GATE voltage is low or the internal logic indicates that the GATE should be low, the EXT_MOSFET_SHORTED bit in the STATUS_MFR_SPECIFIC (80h) and DIAGNOSTIC_WORD (E1h) registers will be toggled high and the $\overline{\text{SMBA}}$ pin will be pulled low unless this feature is disabled using the ALERT_MASK register (D8h). This method effectively determines whether Q_1 is shorted because of damage present between the drain and gate and/or drain and source of the external MOSFET.

Enabling, Disabling, and Resetting

The output can be disabled at any time during normal operation by either pulling the UVLO/EN pin to below its threshold or the OVLO pin above its threshold, causing the GATE voltage to be forced low with a pulldown strength of 2mA. Toggling the UVLO/EN pin will also reset the LM25066I/A from a latched-off state due to an over-current or over-power limit condition which has caused the maximum allowed number of retries to be exceeded. While the UVLO/EN or OVLO pins can be used to disable the output, they have no effect on the volatile memory or address location of the LM25066I/A. User stored values for address, device operation, and warning and fault levels programmed via the SMBus are preserved while the LM25066I/A is powered regardless of the state of the UVLO/EN and OVLO pins. The output may also be enabled or disabled by writing 80h or 0h to the OPERATION (03h) register. To re-enable after a fault, the fault condition should be cleared and the OPERATION (03h) register should be written to 0h and then 80h.

Copyright © 2012–2013, Texas Instruments Incorporated

The SMBus address of the LM25066I/A is captured based on the states of the ADR0, ADR1, and ADR2 pins (GND, NC, VDD) during turn-on and is latched into a volatile register once VDD has exceeded its POR threshold of 2.6V. Reassigning or postponing the address capture is accomplished by holding the VREF pin to ground. Pulling the VREF pin low will also reset the logic and erase the volatile memory of the LM25066I/A. Once released, the VREF pin will charge up to its final value and the address will be latched into a volatile register once the voltage at the VREF exceeds 2.4V.

Copyright © 2012–2013, Texas Instruments Incorporated

APPLICATIONS SECTION

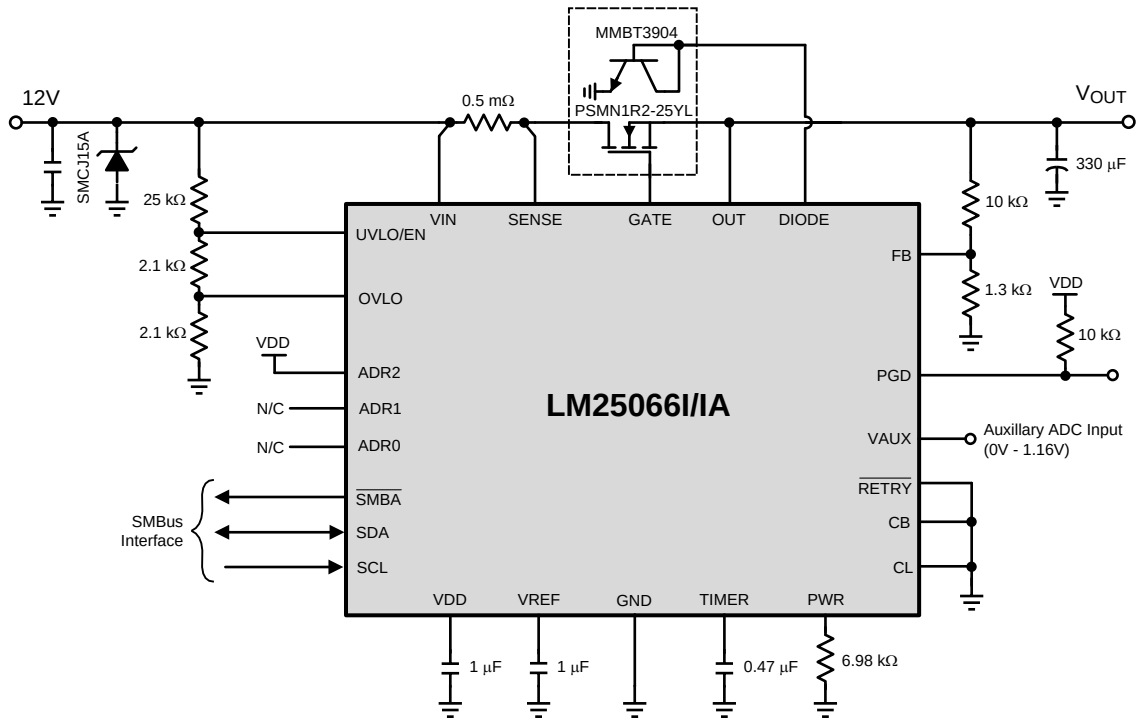

Figure 36. Typical Application Circuit

DESIGN-IN PROCEDURE

(Refer to Figure 36 for Typical Application Circuit) Shown here is the step-by-step procedure for hardware design of the LM25066I/A. This procedure refers to sections that provide detailed information on the following design steps. The recommended design-in procedure is as follows:

MOSFET Selection: Determine MOSFET value based on breakdown voltage, current and power ratings.

Current Limit, R_S: Determine the current limit threshold (I_{LIM}). This threshold must be higher than the normal maximum load current, allowing for tolerances in the current sense resistor value and the LM25066I/A Current Limit threshold voltage. Use Equation 1 to determine the value for R_S.

Power Limit Threshold: Determine the maximum allowable power dissipation for the series pass MOSFET (Q_1) using the device's SOA information. Use Equation 2 to determine the value for R_{PWR}.

Turn-On Time and TIMER Capacitor, C_T: Determine the value for the timing capacitor at the TIMER pin (C_T) using Equation 8. The fault timeout period (t_{FAULT}) **MUST** be longer than the circuit's turn-on-time. The turn-on time can be estimated using the equations in TURN-ON TIME, but should be verified experimentally. Review the resulting insertion time, and the restart timing if retry is enabled.

UVLO, OVLO: Choose option A, B, C, or D from UVLO, OVLO to set the UVLO and OVLO thresholds and hysteresis. Use the procedure for the appropriate option to determine the resistor values at the UVLO/EN and OVLO pins.

Power Good: Choose the appropriate output voltage and calculate the required resistor divider from the output voltage to the FB pin. Choose either VDD or OUT to connect properly sized pullup resistor for the Power Good output (PGD).

Refer to Programming Guide section: After all hardware design is complete, refer to the programming guide for a step by step procedure regarding software.

MOSFET SELECTION

It is recommended that the external MOSFET (Q_1) selection be based on the following criteria:

Copyright © 2012–2013, Texas Instruments Incorporated

- The BV_{DSS} rating should be greater than the maximum system voltage (V_{SYS}), plus ringing and transients which can occur at V_{SYS} when the circuit card, or adjacent cards, are inserted or removed.
- The maximum continuous current rating should be based on the current limit threshold (e.g. 25 mV/R_S), not the maximum load current, since the circuit can operate near the current limit threshold continuously.
- The Pulsed Drain Current spec (I_{DM}) must be greater than the current threshold for the circuit breaker function (45 mV/R_S when CL = CB = GND).
- The SOA (Safe Operating Area) chart of the device and its thermal properties should be used to determine the maximum power dissipation threshold set by the R_{PWR} resistor. The programmed maximum power dissipation should have a reasonable margin from the maximum power defined by the MOSFET's SOA curve (if the device is set to infinitely retry, the MOSFET will be repeatedly stressed during fault restart cycles). The MOSFET manufacturer should be consulted for guidelines.
- $R_{DS(on)}$ should be sufficiently low such that the power dissipation at maximum load current (I_{LIM}^2 x $R_{DS(on)}$) does not raise its junction temperature above the manufacturer's recommendation.
- The gate-to-source voltage provided by the LM25066I/A can be as high as 18.8V at turn-on when the output voltage is zero. At turn-off, the reverse gate-to-source voltage will be equal to the output voltage at the instant the GATE pin is pulled low. If the device chosen for Q_1 is not rated for these voltages, an external zener diode must be added from its gate to source, with the zener voltage less than the device maximum V_{GS} rating. The zener diode's working voltage protects the MOSFET during turn-on, and its forward voltage protects the MOSFET during shutoff. The zener diode's forward current rating must be at least 190 mA to conduct the GATE pulldown current when a circuit breaker condition is detected.

CURRENT LIMIT (R_S)

The LM25066I/A monitors the current in the external MOSFET Q_1 by measuring the voltage across the sense resistor (R_S), connected from VIN to SENSE. The required resistor value is calculated from:

$$R_S = \frac{V_{CL}}{I_{LIM}} \tag{1}$$

where I_{LIM} is the desired current limit threshold. If the voltage across R_S reaches V_{CL}, the current limit circuit modulates the gate of Q_1 to regulate the current at I_{LIM}. While the current limiting circuit is active, the fault timer is active as described in Fault Timer and Restart. For proper operation, R_S must be less than 200 mΩ.

V_{CL} can be set to either 25mV or 46mV via hardware and/or software. This setting defaults to use of CL pin which when grounded is 25mV or high is 46mV. The value when powered can be set via PMBus™ with the MFR_SPECIFIC_DEVICE_SETUP command, which defaults to the 25mV setting.

Once the desired setting is known, calculate the shunt based on that input voltage and maximum current. While the maximum load current in normal operation can be used to determine the required power rating for resistor R_S, basing it on the current limit value provides a more reliable design since the circuit can operate near the current limit threshold continuously. The resistor's surge capability must also be considered since the circuit breaker threshold is 1.8 or 3.6 times the current limit threshold.

Connections from R_S to the LM25066I/A should be made using Kelvin techniques. In the suggested layout of Figure 37, the small pads at the lower corners of the sense resistor connect only to the sense resistor terminals and not to the traces carrying the high current. With this technique, only the voltage across the sense resistor is applied to VIN and SENSE, eliminating the voltage drop across the high current solder connections.

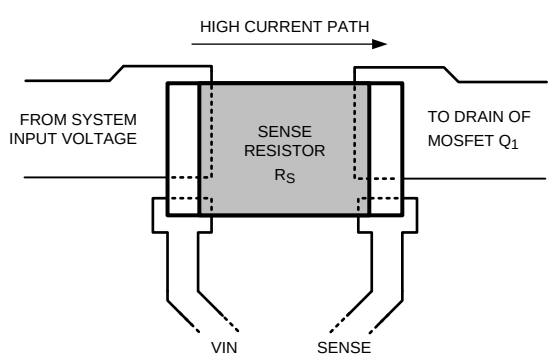

Figure 37. Sense Resistor Connections

Copyright © 2012–2013, Texas Instruments Incorporated

POWER LIMIT THRESHOLD

The LM25066I/A determines the power dissipation in the external MOSFET (Q_1) by monitoring the drain current (the current in R_S), and the V_{DS} of Q_1 (SENSE to OUT pins). The resistor at the PWR pin (R_{PWR}) sets the maximum power dissipation for Q_1 and is calculated from Equation 2:

$$R_{PWR} = 1.71 \times 10^5 \times R_S \times P_{MOSFET(LIM)} \quad (2)$$

where $P_{MOSFET(LIM)}$ is the desired power limit threshold for Q_1 and R_S is the current sense resistor described in Current Limit. For example, if R_S is 10 mΩ and the desired power limit threshold is 20W, R_{PWR} calculates to 34.2 kΩ. If Q_1's power dissipation reaches the threshold, Q_1's gate is controlled to regulate the load current, keeping Q_1's power from exceeding the threshold. For proper operation of the power limiting feature, R_{PWR} must be ≤150 kΩ. While the power limiting circuit is active, the fault timer is active as described in Fault Timer and Restart. Typically, power limit is reached during startup, or if the output voltage falls because of a severe overload or short circuit. The programmed maximum power dissipation should have a reasonable margin from the maximum power defined by the SOA chart, especially if retry is enabled since the MOSFET will be repeatedly stressed during fault restart cycles. The MOSFET manufacturer should be consulted for guidelines. If the application does not require use of the power limit function, the PWR pin can be left open. The accuracy of the power limit function at turn-on may degrade if a very low value power dissipation limit is set. The reason for this caution is that the voltage across the sense resistor, which is monitored and regulated by the power limit circuit, is lowest at turn-on when the regulated current is at a minimum. The voltage across the sense resistor during power limit can be expressed as follows:

$$V_{SENSE} = I_L \times R_S = \frac{R_{PWR}}{1.71 \times 10^5 \times V_{DS}} = \frac{R_S \times P_{FET(LIM)}}{V_{DS}} \quad (3)$$

where I_L is the current in R_S and V_{DS} is the voltage across Q_1. For example, if the power limit is set at 20W with R_S = 10 mΩ and V_{DS} = 15V, the sense resistor voltage calculates to 13.3 mV, which is comfortably regulated by the LM25066I/A. However, if the power limit is set lower (e.g. 2W), the sense resistor voltage calculates to 1.33 mV. At this low level, noise and offsets within the LM25066I/A may degrade the power limit accuracy. To maintain accuracy, the sense resistor voltage should not be less than 5 mV.

TURN-ON TIME

The output turn-on time depends on whether the LM25066I/A operates in current limit, or in both power limit and current limit, during turn-on.

A) Turn-on with current limit only: The current limit threshold (I_{LIM}) is determined by the current sense resistor (R_S). If the current limit threshold is less than the current defined by the power limit threshold at maximum V_{DS}, the circuit operates at the current limit threshold only during turn-on. Referring to Figure 39A, as the load current reaches I_{LIM}, the gate-to-source voltage is controlled at V_{GSL} to maintain the current at I_{LIM}. As the output voltage reaches its final value (V_{DS} ≅ 0V) the drain current reduces to its normal operating value. The time for the OUT pin voltage to transition from zero volts to V_{SYS} is equal to:

$$t_{ON} = \frac{V_{SYS} \times C_L}{I_{LIM}} \quad (4)$$

where C_L is the load capacitance. For example, if V_{SYS} = 12V, C_L = 1000 µF, and I_{LIM} = 1A, t_{ON} calculates to 12 ms. The maximum instantaneous power dissipated in the MOSFET is 12W. This calculation assumes the time from t_1 to t_2 in Figure 40(a) is small compared to t_{ON} and the load does not draw any current until after the output voltage has reached its final value, and PGD switches high (Figure 39A). The Fault Timeout Period must be set longer than t_{ON} to prevent a fault shutdown before the turn-on sequence is complete.

If the load draws current during the turn-on sequence (Figure 39B), the turn-on time is longer than the above calculation and is approximately equal to:

$$t_{ON} = -(R_L \times C_L) \times \ln\left[\frac{(I_{LIM} \times R_L) - V_{SYS}}{(I_{LIM} \times R_L)}\right] \quad (5)$$

where R_L is the load resistance. The Fault Timeout Period must be set longer than t_{ON} to prevent a fault shutdown before the turn-on sequence is complete.

Copyright © 2012–2013, Texas Instruments Incorporated

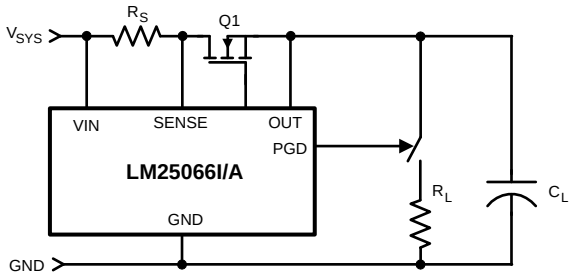

Figure 38. A. No Load Current During Turn-On

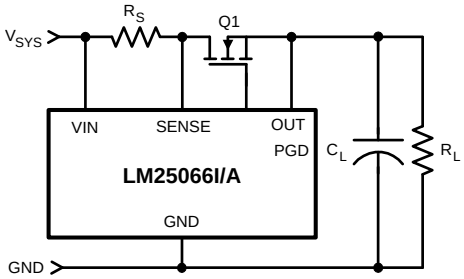

Load Draws Current During Turn-On

Figure 39. Current During Turn-On

B) Turn-On with Power Limit and Current Limit: The maximum allowed power dissipation in Q_1 ($P_{MOSFET(LIM)}$) is defined by the resistor at the PWR pin, and the current sense resistor R_S. See POWER LIMIT THRESHOLD. If the current limit threshold (I_{LIM}) is higher than the current defined by the power limit threshold at maximum V_{DS} ($P_{MOSFET(LIM)}/V_{SYS}$), the circuit operates initially in the power limit mode when the V_{DS} of Q_1 is high and then transitions to current limit mode as the current increases to I_{LIM} and V_{DS} decreases. Assuming the load (R_L) is not connected during turn-on, the time for the output voltage to reach its final value is approximately equal to:

$$t_{ON} = \frac{C_L \times V_{SYS}^2}{2 \times P_{MOSFET(LIM)}} + \frac{C_L \times P_{MOSFET(LIM)}}{2 \times I_{LIM}^2} \tag{6}$$

For example, if V_{SYS} = 12V, C_L = 1000 µF, I_{LIM} = 1A, and $P_{MOSFET(LIM)}$ = 10W, t_{ON} calculates to ≅12.2 ms, and the initial current level (I_P) is approximately 0.83A. The Fault Timeout Period must be set longer than t_{ON}.

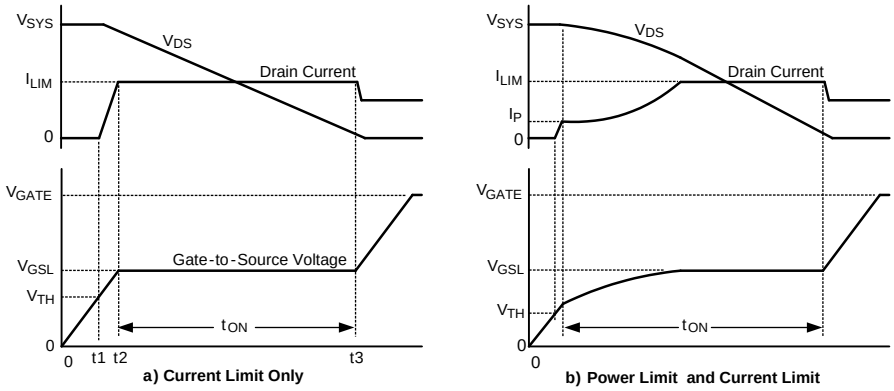

Figure 40. MOSFET Power Up Waveforms

TIMER CAPACITOR, C_T

The TIMER pin capacitor (C_T) sets the timing for the insertion time delay, fault timeout period, and the restart timing of the LM25066I/A.

Copyright © 2012–2013, Texas Instruments Incorporated

A) Insertion Delay -Upon applying the system voltage (V_{SYS}) to the circuit, the external MOSFET (Q_1) is held off during the insertion time (t_1 in Figure 32) to allow ringing and transients at V_{SYS} to settle. Since each backplane's response to a circuit card plug-in is unique, the worst case settling time must be determined for each application. The insertion time starts when VIN reaches the POR threshold, at which time the internal 5.5 µA current source charges C_T from 0V to 1.7V. The required capacitor value is calculated from:

$$C_T = \frac{t_1 \times 5.5\ \mu A}{1.7V} = t_1 \times 3.2 \times 10^{-6} \tag{7}$$

For example, if the desired insertion delay is 250 ms, C_T calculates to 0.8 µF. At the end of the insertion delay, C_T is quickly discharged by a 1.9 mA current sink.

B) Fault Timeout Period -During inrush current limiting or upon detection of a fault condition where the current limit and/or power limit circuits regulate the current through Q_1, the fault timer current source (90 µA) is switched on to charge C_T. The Fault Timeout Period is the time required for the TIMER pin voltage to reach 1.7V, at which time Q_1 is switched off. The required capacitor value for the desired Fault Timeout Period t_{FAULT} is calculated from:

$$C_T = \frac{t_{FAULT} \times 90\ \mu A}{1.7V} = t_{FAULT} \times 5.3 \times 10^{-5} \tag{8}$$

For example, if the desired Fault Timeout Period is 15 ms, C_T calculates to 0.8 µF. C_T is discharged by the 2.8 µA current sink at the end of the Fault Timeout Period. After the Fault Timeout Period, if retry is disabled, the LM25066I/A latches the GATE pin low until a power up sequence is initiated by external circuitry. When the Fault Timeout Period of the LM25066I/A expires, a restart sequence starts as described below (Restart Timing). During consecutive cycles of the restart sequence, the fault timeout period is shorter than the initial fault timeout period described above by approximately 20% since the voltage at the TIMER pin starts ramping up from 0.3V rather than ground.

Since the LM25066I/A normally operates in power limit and/or current limit during a power up sequence, the Fault Timeout Period **MUST** be longer than the time required for the output voltage to reach its final value. See TURN-ON TIME.

C) Restart Timing - For the LM25066I/A, after the Fault Timeout Period described above, C_T is discharged by the 2.8 µA current sink to 1V. The TIMER pin then cycles through seven additional charge/discharge cycles between 1V and 1.7V as shown in Figure 34. The restart time ends when the TIMER pin voltage reaches 0.3V during the final high-to-low ramp. The restart time, after the Fault Timeout Period, is equal to:

$$t_{RESTART} = C_T \times \left[\frac{7 \times 0.7V}{2.8\ \mu A} + \frac{7 \times 0.7V}{90\ \mu A} + \frac{1.4V}{2.8\ \mu A} \right] \tag{9}$$

$$= C_T \times 2.3 \times 10^{6} \tag{10}$$

For example, if C_T = 0.8 µF, $t_{RESTART}$ = 2 seconds. At the end of the restart time, Q_1 is switched on. If the fault is still present, the fault timeout and restart sequence repeats. The on-time duty cycle of Q_1 is approximately 0.67% in this mode.

UVLO, OVLO

By programming the UVLO and OVLO thresholds the LM25066I/A enables the series pass device (Q_1) when the input supply voltage (V_{SYS}) is within the desired operational range. If V_{SYS} is below the UVLO threshold, or above the OVLO threshold, Q_1 is switched off, denying power to the load. Hysteresis is provided for each threshold.

Option A: The configuration shown in Figure 41 requires three resistors (R1-R3) to set the thresholds.

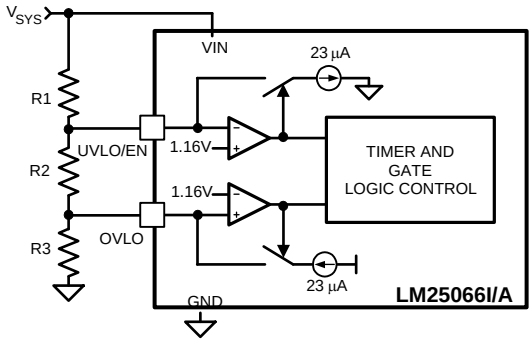

Figure 41. UVLO and OVLO Thresholds Set By R1-R3

The procedure to calculate the resistor values is as follows:

- Choose the upper UVLO threshold (V_{UVH}), and the lower UVLO threshold (V_{UVL}).
- Choose the upper OVLO threshold (V_{OVH}).
- The lower OVLO threshold (V_{OVL}) cannot be chosen in advance in this case, but is determined after the values for R1-R3 are determined. If V_{OVL} must be accurately defined in addition to the other three thresholds, see Option B below. The resistors are calculated as follows:

$$R1 = \frac{V_{UVH} - V_{UVL}}{23\ \mu A} = \frac{V_{UV(HYS)}}{23\ \mu A} \tag{11}$$

$$R3 = \frac{1.16V \times R1 \times V_{UVL}}{V_{OVH} \times (V_{UVL} - 1.16V)} \tag{12}$$

$$R2 = \frac{1.16V \times R1}{V_{UVL} - 1.16V} - R3 \tag{13}$$

The lower OVLO threshold is calculated from:

$$V_{OVL} = [(R1 + R2) \times (\frac{(1.16V)}{R3} - 23\ \mu A)] + 1.16V \tag{14}$$

As an example, assume the application requires the following thresholds: V_{UVH} = 8V, V_{UVL} = 7V, V_{OVH} = 15V.

$$R1 = \frac{8V - 7V}{23\ \mu A} = \frac{1V}{23\ \mu A} = 43.5\ k\Omega \tag{15}$$

$$R3 = \frac{1.16V \times R1 \times 7V}{15V \times (7V - 1.16V)} = 4.03\ k\Omega \tag{16}$$

$$R2 = \frac{1.16V \times R1}{(7V - 1.16V)} - R3 = 4.61\ k\Omega \tag{17}$$

The lower OVLO threshold calculates to 12.03V and the OVLO hysteresis is 2.97V. Note that the OVLO hysteresis is always slightly greater than the UVLO hysteresis in this configuration. When the R1-R3 resistor values are known, the threshold voltages and hysteresis are calculated from the following:

$$V_{UVH} = 1.16V + [R1 \times (23\ \mu A + \frac{1.16V}{(R2 + R3)})] \tag{18}$$

$$V_{UVL} = \frac{1.16V \times (R1 + R2 + R3)}{R2 + R3} \tag{19}$$

$$V_{UV(HYS)} = R1 \times 23\mu A \tag{20}$$

$$V_{OVH} = \frac{1.16V \times (R1 + R2 + R3)}{R3} \tag{21}$$

$$V_{OVL} = [(R1 + R2) \times \frac{(1.16V)}{R3} - 23\ \mu A)] + 1.16V \tag{22}$$

$$V_{OV(HYS)} = (R1 + R2) \times 23\mu A \tag{23}$$

Copyright © 2012–2013, Texas Instruments Incorporated

Option B: If all four thresholds must be accurately defined, the configuration in Figure 42 can be used.

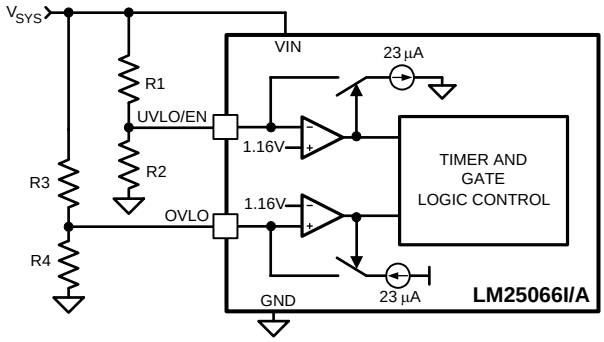

Figure 42. Programming the Four Thresholds

The four resistor values are calculated as follows: - Choose the upper and lower UVLO thresholds (V_{UVH}) and (V_{UVL}).

$$R1 = \frac{V_{UVH} - V_{UVL}}{23\ \mu A} = \frac{V_{UV(HYS)}}{23\ \mu A} \tag{24}$$

$$R2 = \frac{1.16V \times R1}{(V_{UVL} - 1.16V)} \tag{25}$$

- Choose the upper and lower OVLO threshold (V_{OVH}) and (V_{OVL}).

$$R3 = \frac{V_{OVH} - V_{OVL}}{23\ \mu A} = \frac{V_{OV(HYS)}}{23\ \mu A} \tag{26}$$

$$R4 = \frac{1.16V \times R3}{(V_{OVH} - 1.16V)} \tag{27}$$

As an example, assume the application requires the following thresholds: V_{UVH} = 8V, V_{UVL} = 7V, V_{OVH} = 15.5V, and V_{OVL} = 14V. Therefore $V_{UV(HYS)}$ = 1V and $V_{OV(HYS)}$ = 1.5V. The resistor values are:

R1 = 43.5 kΩ, R2 = 8.64 kΩ

R3 = 65.2 kΩ, R4 = 5.27 kΩ

When the R1-R4 resistor values are known, the threshold voltages and hysteresis are calculated from the following:

$$V_{UVH} = 1.16V + [R1 \times (\frac{1.16V}{R2} + 23\ \mu A)] \tag{28}$$

$$V_{UVL} = \frac{1.16V \times (R1 + R2)}{R2} \tag{29}$$

$$V_{UV(HYS)} = R1 \times 23\ \mu A \tag{30}$$

$$V_{OVH} = \frac{1.16V \times (R3 + R4)}{R4} \tag{31}$$

$$V_{OVL} = 1.16V + [R3 \times (\frac{1.16V}{R4} - 23\ \mu A)] \tag{32}$$

$$V_{OV(HYS)} = R3 \times 23\ \mu A \tag{33}$$

Option C: The minimum UVLO level is obtained by connecting the UVLO/EN pin to VIN as shown in Figure 43. Q_1 is switched on when the VIN voltage reaches the POR threshold (≅2.6V). The OVLO thresholds are set using R3, R4. Their values are calculated using the procedure in Option B.

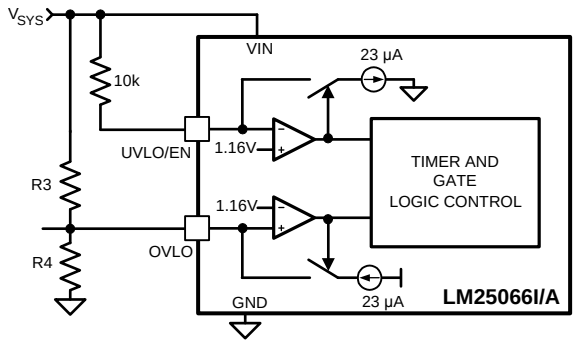

Figure 43. UVLO = POR

Option D: The OVLO function can be disabled by grounding the OVLO pin. The UVLO thresholds are set as described in Option B or Option C.

POWER GOOD

When the voltage at the FB pin increases above its threshold, the internal pulldown acting on the PGD pin is disabled allowing PGD to rise to V_{PGD} through the pullup resistor, R_{PG}, as shown in Figure 45. The pullup voltage (V_{PGD}) can be as high as 17V, and can be higher or lower than the voltages at VIN and OUT. VDD is a convenient choice for V_{PGD} as it allows interface to low voltage logic and avoids glitching on PGD during power-up. If a delay is required at PGD, suggested circuits are shown in Figure 46 In Figure 46A, capacitor C_{PG} adds delay to the rising edge, but not to the falling edge. In Figure 46B, the rising edge is delayed by R_{PG1} + R_{PG2} and C_{PG}, while the falling edge is delayed a lesser amount by R_{PG2} and C_{PG}. Adding a diode across R_{PG2} (Figure 46C) allows for equal delays at the two edges, or a short delay at the rising edge and a long delay at the falling edge.

Setting the output threshold for the PGD pin requires two resistors (R4, R5) as shown in Figure 44. While monitoring the output voltage is shown in Figure 44. R4 can be connected to any other voltage which requires monitoring.

The resistor values are calculated as follows:

Choose the upper and lower threshold (V_{PGDH}) and (V_{PGDL}) at V_{OUT}.

$$R4 = \frac{V_{PGDH} - V_{PGDL}}{24\ \mu A} = \frac{V_{PGD(HYS)}}{24\ \mu A}$$

$$R5 = \frac{1.167V \times R4}{(V_{PGDH} - 1.167V)} \tag{34}$$

As an example, assume the application requires the following thresholds: V_{PGDH} = 10.14V, and V_{PGDL} = 9.9V. Therefore $V_{PGD(HYS)}$ = 0.24V. The resistor values are:

R4 = 10 kΩ, R5 = 1.3 kΩ

Where the R4 and R5 resistor values are known, the threshold voltages and hysteresis are calculated from the following:

$$V_{PGDH} = \frac{1.167V \times (R4 + R5)}{R5}$$

$$V_{PGDL} = 1.167V + [R4 \times (\frac{1.167V}{R5} + 24\ \mu A)]$$

$$V_{PGD(HYS)} = R4 \times 24\ \mu A \tag{35}$$

Copyright © 2012–2013, Texas Instruments Incorporated

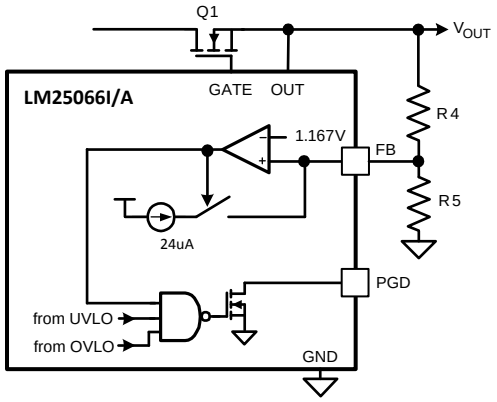

Figure 44. Programming the PGD Threshold

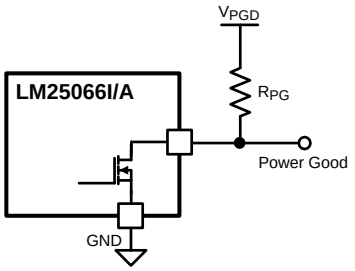

Figure 45. Power Good Output

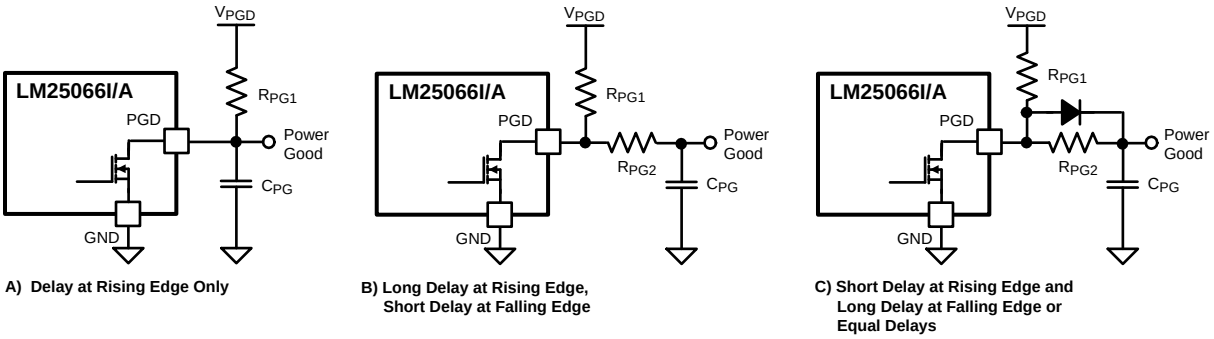

Figure 46. Adding Delay to the Power Good Output Pin

SYSTEM CONSIDERATIONS

A) Continued proper operation of the LM25066I/A hot-swap circuit normally dictates that capacitance be present on the supply side of the connector into which the hot-swap circuit is plugged in, as depicted in Figure 47. The capacitor in the "LIVE POWER SOURCE" section is necessary to absorb the transient generated whenever the hot-swap circuit shuts off the load current. If the capacitance is not present, parasitic inductance of the supply lines will generate a voltage transient at shut-off which may exceed the absolute maximum rating of the LM25066I/A, resulting in its destruction. A TVS device with appropriate voltage and power ratings can also be connected from VIN to GND to clamp the voltage spike (see application note AN-2100 SNVA464).

Copyright © 2012–2013, Texas Instruments Incorporated

B) If the load powered by the LM25066I/A hot-swap circuit has inductive characteristics, a Schottky diode is required across the LM25066I/A's output along with some load capacitance. The capacitance and diode are necessary to limit the negative excursion at the OUT pin when the load current is shut off. If the OUT pin transitions more than 0.3V negative, the LM25066I/A will internally reset, erasing the volatile setting for retries and warning thresholds. See Figure 47. To alleviate this, a small gate resistance (e.g. 10Ω) can be used. This resistor has the added benefit of damping any high frequency gate voltage oscillations, particularly in paralleled FET arrangements.

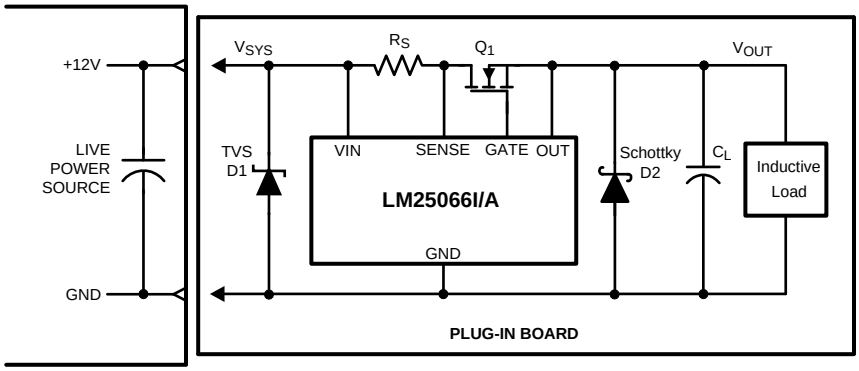

Figure 47. Output Diode Required for Inductive Loads

PC BOARD GUIDELINES

The following guidelines should be followed when designing the PC board for the LM25066I/A:

- Place the LM25066I/A close to the board's input connector to minimize trace inductance from the connector to the MOSFET.
- Place a small capacitor, C_{IN} (1nF), directly adjacent to the VIN and GND pins of the LM25066I/A to help minimize transients which may occur on the input supply line. Transients of several volts can easily occur when the load current is shut off. ASIDE: note that if the current drawn by such capacitor is deemed unacceptable, input voltage spike transients can be appropriately miniminzed by proper placement of a TVS device and operation without this C_{IN} capacitor becomes feasible.
- Place a 1 µF capacitor as close as possible to VREF pin.
- Place a 1 µF capacitor as close as possible to VDD pin.
- The sense resistor (R_S) should be placed close to the LM25066I/A. In particular, the trace to the VIN pin should be made as low resistance as practical to ensure maximum current and power measurement accuracy. Connect R_S using the Kelvin techniques shown in Figure 37.
- The high current path from the board's input to the load (via Q_1) and the return path should be parallel and close to each other to minimize parasitic loop inductance.
- The ground connections for the various components around the LM25066I/A should be connected directly to each other and to the LM25066I/A's GND pin and then connected to the system ground at one point. Do not connect the various component grounds to each other through the high current ground line. For more details, see application note AN-2100 SNVA464.
- Provide adequate heat sinking for the series pass device (Q_1) to help reduce stresses during turn-on and turn-off.
- Keep the gate trace from the LM25066I/A to the pass MOSFET short and direct.
- The board's edge connector can be designed such that the LM25066I/A detects via the UVLO/EN pin that the board is being removed and responds by turning off the load before the supply voltage is disconnected. For example, in Figure 48, the voltage at the UVLO/EN pin goes to ground before V_{SYS} is removed from the LM25066I/A because of the shorter edge connector pin. When the board is inserted into the edge connector, the system voltage is applied to the LM25066I/A's VIN pin before the UVLO voltage is taken high, thereby allowing the LM25066I/A to turn on the output in a controlled fashion.

Copyright © 2012–2013, Texas Instruments Incorporated

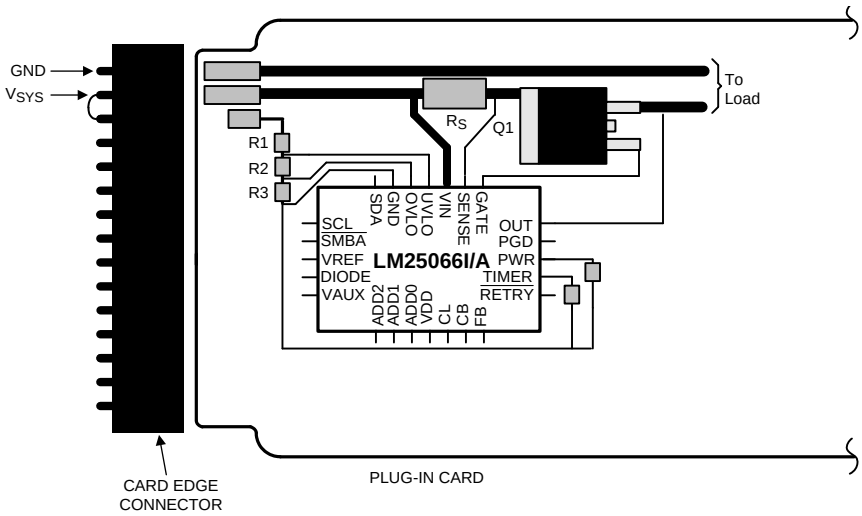

Figure 48. Recommended Board Connector Design

PMBus™ Command Support

The device features an SMBus interface that allows the use of PMBus™ commands to set warn levels, error masks, and get telemetry on V_{IN}, V_{OUT}, I_{IN}, V_{AUX}, and P_{IN}. The supported PMBus™ commands are shown in Table 1.

Table 1. Supported PMBus™ Commands

Code	Name	Function	R/W	Number Of Data Bytes	Default Value
01h	OPERATION	Retrieves or stores the operation status.	R/W	1	80h
03h	CLEAR_FAULTS	Clears the status registers and re-arms the black box registers for updating.	Send Byte	0	
19h	CAPABILITY	Retrieves the device capability.	R	1	B0h
43h	VOUT_UV_WARN_LIMIT	Retrieves or stores output under-voltage warn limit threshold.	R/W	2	0000h
4Fh	OT_FAULT_LIMIT	Retrieves or stores over-temperature fault limit threshold.	R/W	2	0FFFh (256°C)
51h	OT_WARN_LIMIT	Retrieves or stores over-temperature warn limit threshold.	R/W	2	0FFFh (256°C)
57h	VIN_OV_WARN_LIMIT	Retrieves or stores input over-voltage warn limit threshold.	R/W	2	0FFFh
58h	VIN_UV_WARN_LIMIT	Retrieves or stores input under-voltage warn limit threshold.	R/W	2	0000h
5Dh	IIN_OC_WARN_LIMIT	Retrieves or stores input current warn limit threshold (mirror at D3h)	R/W	2	0FFFh
78h	STATUS_BYTE	Retrieves information about the part operating status.	R	1	01h
79h	STATUS_WORD	Retrieves information about the part operating status.	R	2	0801h
7Ah	STATUS_VOUT	Retrieves information about output voltage status.	R	1	00h
7Ch	STATUS_INPUT	Retrieves information about input status.	R	1	10h
7Dh	STATUS_TEMPERATURE	Retrieves information about temperature status.	R	1	00h
7Eh	STATUS_CML	Retrieves information about communications status.	R	1	00h
7Fh	STATUS_OTHER	Retrieves other status information	R	1	00h
80h	STATUS_MFR_SPECIFIC	Retrieves information about circuit breaker and MOSFET shorted status.	R	1	10h
86h	READ_EIN	Retrieves energy meter measurement.	R	6	00h 00h 00h 00h 00h 00h

Copyright © 2012–2013, Texas Instruments Incorporated

Table 1. Supported PMBus™ Commands (continued)

Code	Name	Function	R/W	Number Of Data Bytes	Default Value
88h	READ_VIN	Retrieves input voltage measurement.	R	2	0000h
89h	READ_IIN	Retrieves input current measurement (Mirror at D1h).	R	2	0000h
8Bh	READ_VOUT	Retrieves output voltage measurement.	R	2	0000h
8Dh	READ_TEMPERATURE_1	Retrieves temperature measurement.	R	2	0000h
97h	READ _PIN	Retrieves averaged input power measurement (mirror at DFh).	R	2	0000h
98h	PMBUS_Revision	Retrieves PMBus Revision	R	1	22h
99h	MFR_ID	Retrieves manufacturer ID in ASCII characters (TI).	R	2	54h 49h
9Ah	MFR_MODEL	Retrieves Part number in ASCII characters. (LM25066I).	R	8	4Ch 4Dh 32h 35h 30h 36h 36h 49h
9Bh	MFR_REVISION	Retrieves part revision letter/number in ASCII (e.g. AA).	R	2	41h A 41h A
D0h	MFR_SPECIFIC_00 READ_VAUX	Retrieves auxiliary voltage measurement.	R	2	0000h
D1h	MFR_SPECIFIC_01 MFR_READ_IIN	Retrieves input current measurement. (Mirror at 89h)	R	2	0000h
D2h	MFR_SPECIFIC_02 MFR_READ_PIN	Retrieves input power measurement.	R	2	0000h
D3h	MFR_SPECIFIC_03 MFR_IIN_OC_WARN_LIMIT	Retrieves or stores input current limit warn threshold. (Mirror at 5Dh)	R/W	2	0FFFh
D4h	MFR_SPECIFIC_04 MFR_PIN_OP_WARN_LIMIT	Retrieves or stores input power limit warn threshold.	R/W	2	0FFFh
D5h	MFR_SPECIFIC_05 READ_PIN_PEAK	Retrieves measured maximum input power measurement.	R	2	0000h
D6h	MFR_SPECIFIC_06 CLEAR_PIN_PEAK	Resets the contents of the peak input power register to zero.	Send Byte	0	
D7h	MFR_SPECIFIC_07 GATE_MASK	Disables external MOSFET gate control for FAULTs.	R/W	1	0000h
D8h	MFR_SPECIFIC_08 ALERT_MASK	Retrieves or stores user user fault mask.	R/W	2	FD04h
D9h	MFR_SPECIFIC_09 DEVICE_SETUP	Retrieves or stores information about number of retry attempts.	R/W	1	0000h
DAh	MFR_SPECIFIC_10 BLOCK_READ	Retrieves most recent diagnostic and telemetry information in a single transaction.	R	12	0460h 0000h 0000h 0000h 0000h 0000h
DBh	MFR_SPECIFIC_11 SAMPLES_FOR_AVG	2^n number of samples to be averaged, range = 00h to 0Ch .	R/W	1	08h
DCh	MFR_SPECIFIC_12 READ_AVG_VIN	Retrieves averaged input voltage measurement.	R	2	0000h
DDh	MFR_SPECIFIC_13 READ_AVG_VOUT	Retrieves averaged output voltage measurement.	R	2	0000h
DEh	MFR_SPECIFIC_14 READ_AVG_IIN	Retrieves averaged input current measurement.	R	2	0000h
DFh	MFR_SPECIFIC_15 READ_AVG_PIN	Retrieves averaged input power measurement. (Mirror at 97h)	R	2	0000h

Copyright © 2012–2013, Texas Instruments Incorporated

Table 1. Supported PMBus™ Commands (continued)

Code	Name	Function	R/W	Number Of Data Bytes	Default Value
E0h	MFR_SPECIFIC_16 BLACK_BOX_READ	Captures diagnostic and telemetry information which are latched when the first SMBA alert occurs after faults have been cleared.	R	12	0000h 0000h 0000h 0000h 0000h 0000h
E1h	MFR_SPECIFIC_17 READ_DIAGNOSTIC_WORD	Manufacturer-specific parallel of the STATUS_WORD to convey all FAULT/WARN data in a single transaction.	R	2	0880h
E2h	MFR_SPECIFIC_18 AVG_BLOCK_READ	Retrieves most recent average telemetry and diagnostic information in a single transaction.	R	12	0880h 0000h 0000h 0000h 0000h 0000h

Standard PMBus™ Commands

OPERATION (01h)

The OPERATION command is a standard PMBus™ command that controls the MOSFET switch. This command may be used to switch the MOSFET ON and OFF under host control. It is also used to re-enable the MOSFET after a fault triggered shutdown. Writing an OFF command followed by an ON command will clear all faults. Writing only an ON command after a fault triggered shutdown will not clear the fault registers. The OPERATION command is issued with the write byte protocol.

Table 2. Recognized OPERATION Command Values

Value	Meaning	Default
80h	Switch ON	80h
00h	Switch OFF	n/a

CLEAR_FAULTS (03h)

The CLEAR_FAULTS command is a standard PMBus™ command that resets all stored warning and fault flags and the SMBA signal. If a fault or warning condition still exists when the CLEAR_FAULTS command is issued, the SMBA signal may not clear or will re-assert almost immediately. Issuing a CLEAR_FAULTS command will not cause the MOSFET to switch back on in the event of a fault turn-off: that must be done by issuing an OPERATION command after the fault condition is cleared. This command uses the PMBus™ send byte protocol.

CAPABILITY (19h)

The CAPABILITY command is a standard PMBus™ command that returns information about the PMBus™ functions supported by the LM25066I/A. This command is read with the PMBus™ read byte protocol.

Table 3. CAPABILITY Register

Value	Meaning	Default
B0h	Supports Packet Error Check, 400Kbits/sec, Supports SMBus Alert	B0h

VOUT_UV_WARN_LIMIT (43h)

The VOUT_UV_WARN_LIMIT command is a standard PMBus™ command that allows configuring or reading the threshold for the VOUT Under-voltage Warning detection. Reading and writing to this register should use the coefficients shown in Table 44. Accesses to this command should use the PMBus™ read or write word protocol. If the measured value of VOUT falls below the value in this register, VOUT UV Warn Limit flags are set in the respective registers, and the SMBA signal is asserted.

Table 4. VOUT_UV_WARN_LIMIT Register

Value	Meaning	Default
1h – 0FFFh	VOUT Under-voltage Warning detection threshold	0000h (disabled)
0000h	VOUT Under-voltage Warning disabled	n/a

OT_FAULT_LIMIT (4Fh)

The OT_FAULT_LIMIT is a standard PMBus™ command that allows configuring or reading the threshold for the Overtemperature Fault detection. Reading and writing to this register should use the coefficients shown in Table 44. Accesses to this command should use the PMBus™ read or write word protocol. If the measured temperature exceeds this value, an overtemperature fault is triggered, the MOSFET is switched off, OT Fault flags are set in the respective registers, and the $\overline{\text{SMBA}}$ signal is asserted. After the measured temperature falls below the value in this register, the MOSFET may be switched back on with the OPERATION command. A single temperature measurement is an average of 16 milliseconds of data. Therefore, the temperature fault detection time maybe up to 16 ms.

Table 5. OT_FAULT_LIMIT Register

Value	Meaning	Default
0h – 0FFFh	Overtemperature Fault Threshold Value	0FFFh (256°C)
0FFFh	Overtemperature Fault detection disabled	n/a

OT_WARN_LIMIT (51h)

The OT_WARN_LIMIT is a standard PMBus™ command that allows configuring or reading the threshold for the Overtemperature Warning detection. Reading and writing to this register should use the coefficients shown in Table 44. Accesses to this command should use the PMBus™ read or write word protocol. If the measured temperature exceeds this value, an overtemperature warning is triggered, the OT Warn flags are set in the respective registers, and the $\overline{\text{SMBA}}$ signal is asserted. A single temperature measurement is an average of 16 milliseconds of data. Therefore, the temperature warn detection time maybe up to 16 ms.

Table 6. OT_WARN_LIMIT Register

Value	Meaning	Default
0h – 0FFFh	Overtemperature Warn Threshold Value	0FFFh (256°C)
0FFFh	Overtemperature Warn detection disabled	n/a

VIN_OV_WARN_LIMIT (57h)

The VIN_OV_WARN_LIMIT is a standard PMBus™ command that allows configuring or reading the threshold for the VIN Over-voltage Warning detection. Reading and writing to this register should use the coefficients shown in Table 44. Accesses to this command should use the PMBus™ read or write word protocol. If the measured value of VIN rises above the value in this register, VIN OV Warn flags are set in the respective registers, and the $\overline{\text{SMBA}}$ signal is asserted.

Table 7. VIN_OV_WARN_LIMIT Register

Value	Meaning	Default
0h – 0FFFh	VIN Over-voltage Warning detection threshold	0FFFh (disabled)
0FFFh	VIN Over-voltage Warning disabled	n/a

VIN_UV_WARN_LIMIT (58h)

The VIN_UV_WARN_LIMIT is a standard PMBus™ command that allows configuring or reading the threshold for the VIN Under-voltage Warning detection. Reading and writing to this register should use the coefficients shown in Table 44. Accesses to this command should use the PMBus™ read or write word protocol. If the measured value of VIN falls below the value in this register, VIN UV Warn flags are set in the respective registers, and the $\overline{\text{SMBA}}$ signal is asserted.

Copyright © 2012–2013, Texas Instruments Incorporated

Table 8. VIN_UV_WARN_LIMIT Register

Value	Meaning	Default
1h – 0FFFh	VIN Under-voltage Warning detection threshold	0000h (disabled)
0000h	VIN Under-voltage Warning disabled	n/a

IIN_OC_WARN_LIMIT (5Dh)

The IIN_OC_WARN_LIMIT command is a standard PMBus command that allows configuring or reading the threshold for the input current, over current warning. For access to this command use the PMBus Read or Write word protocol. The coefficients show in table 43. To read data use the SMBus Read Word protocol. To write data use the SMBus Write Word protocol. Sets the input current threshold above which a warning will be generated. (Mirror at D3h)

STATUS_BYTE (78h)

The STATUS_BYTE command is a standard PMBus™ command that returns the value of a number of flags indicating the state of the LM25066I/A. Accesses to this command should use the PMBus™ read byte protocol. To clear bits in this register, the underlying fault should be removed and a CLEAR_FAULTS command issued.

Table 9. STATUS_BYTE Definitions

Bit	NAME	Meaning	Default
7	BUSY	Not Supported, always 0	0
6	OFF	This bit is asserted if the MOSFET is not switched on for any reason.	0
5	VOUT OV	Not Supported, always 0	0
4	IOUT OC	OC Fault or OP Fault	0
3	VIN UV FAULT	A VIN Under-voltage Fault has occurred	0
2	TEMPERATURE	A Temperature Fault or Warning has occurred	0
1	CML	A Communication Fault has occurred	0
0	None of the Above	A fault or warning not listed in bits [7:1] has occurred	1

STATUS_WORD (79h)

The STATUS_WORD command is a standard PMBus™ command that returns the value of a number of flags indicating the state of the LM25066I/A. Accesses to this command should use the PMBus™ read word protocol. To clear bits in this register, the underlying fault should be removed and a CLEAR_FAULTS command issued. The INPUT and VIN UV FAULT flags will default to 1 on startup. However, they will be cleared to 0 after the first time the input voltage exceeds the resistor programmed UVLO threshold.

Table 10. STATUS_WORD Definitions

Bit	NAME	Meaning	Default
15	VOUT	An output voltage fault or warning has occurred	0
14	IOUT/POUT	Not Supported, always 0	0
13	INPUT	An input voltage or current fault has occurred	0
12	FET Fail	FET Fail	0
11	$\overline{\text{POWER GOOD}}$	The Power Good signal has been negated	1
10	FANS	Not Supported, always 0	0
9	CB Fault	Circuit Breaker Fault has occurred	0
8	UNKNOWN	Not Supported, always 0	0
7	BUSY	Not Supported, always 0	0
6	OFF	This bit is asserted if the MOSFET is not switched on for any reason.	0
5	VOUT OV	Not Supported, always 0	0
4	IOUT OC/OP	IIN overcurrent fault or FET dissapation fault	0
3	VIN UV FAULT	A VIN Under-voltage Fault has occurred	0
2	TEMPERATURE	A Temperature Fault or Warning has occurred	0

Copyright © 2012–2013, Texas Instruments Incorporated

Table 10. STATUS_WORD Definitions (continued)

Bit	NAME	Meaning	Default
1	CML	A Communication Fault has occurred	0
0	None of the Above	A fault or warning not listed in bits [7:1] has occurred	1

STATUS_VOUT (7Ah)

The STATUS_VOUT command is a standard PMBus™ command that returns the value of the VOUT UV Warning flag. Accesses to this command should use the PMBus™ read byte protocol. To clear bits in this register, the underlying fault should be removed and a CLEAR_FAULTS command issued.

Table 11. STATUS_VOUT Definitions

Bit	NAME	Meaning	Default
7	VOUT OV Fault	Not Supported, always 0	0
6	VOUT OV Warn	Not Supported, always 0	0
5	VOUT UV Warn	A VOUT Under-voltage Warning has occurred	0
4	VOUT UV Fault	Not Supported, always 0	0
3	VOUT Max	Not Supported, always 0	0
2	TON Max Fault	Not Supported, always 0	0
1	TOFF Max Fault	Not Supported, always 0	0
0	VOUT Tracking Error	Not Supported, always 0	0

STATUS_INPUT (7Ch)

The STATUS_INPUT command is a standard PMBus™ command that returns the value of a number of flags related to input voltage, current, and power. Accesses to this command should use the PMBus™ read byte protocol. To clear bits in this register, the underlying fault should be removed and a CLEAR_FAULTS command issued. The VIN UV Warn flag will default to 1 on startup. However, it will be cleared to 0 after the first time the input voltage exceeds the resistor programmed UVLO threshold.

Table 12. STATUS_INPUT Definitions

Bit	NAME	Meaning	Default
7	VIN OV Fault	A VIN Over-voltage Fault has occurred	0
6	VIN OV Warn	A VIN Over-voltage Warning has occurred	0
5	VIN UV Warn	A VIN Under-voltage Warning has occurred	1
4	VIN UV Fault	A VIN Under-voltage Fault has occurred	0
3	Insufficient Voltage	Not Supported, always 0	0
2	IIN OC Fault	An IIN Over-current Fault has occurred	0
1	IIN OC Warn	An IIN Over-current Warning has occurred	0
0	PIN OP Warn	A PIN Over-power Warning has occurred	0

STATUS_TEMPERATURE (7Dh)

The STATUS_TEMPERATURE is a standard PMBus™ command that returns the value of the of a number of flags related to the temperature telemetry value. Accesses to this command should use the PMBus™ read byte protocol. To clear bits in this register, the underlying fault should be removed and a CLEAR_FAULTS command issued.

Table 13. STATUS_TEMPERATURE Definitions

Bit	NAME	Meaning	Default
7	Overtemp Fault	An Overtemperature Fault has occurred	0
6	Overtemp Warn	An Overtemperature Warning has occurred	0
5	Undertemp Warn	Not Supported, always 0	0
4	Undertemp Fault	Not Supported, always 0	0
3	reserved	Not Supported, always 0	0

Copyright © 2012–2013, Texas Instruments Incorporated

Table 13. STATUS_TEMPERATURE Definitions (continued)

Bit	NAME	Meaning	Default
2	reserved	Not Supported, always 0	0
1	reserved	Not Supported, always 0	0
0	reserved	Not Supported, always 0	0

STATUS_CML (7Eh)

The STATUS_CML command is a standard PMBus™ command that returns the value of a number of flags related to communication faults. Accesses to this command should use the PMBus™ read byte protocol. To clear bits in this register, a CLEAR_FAULTS command should be issued.

Table 14. STATUS_CML Definitions

Bit	NAME	Default
7	Invalid or unsupported command received	0
6	Invalid or unsupported data received	0
5	Packet Error Check failed	0
4	Memory Fault Detected Not supported, always 0	0
3	Processor Fault Detected Not supported, always 0	0
2	Reserved, always 0	0
1	Miscellaneous communications fault has occurred	0
0	Other memory or logic fault detected Not supported, always 0	0

STATUS_OTHER (7Fh)

Bit	NAME	Default
7	Reserved: always 0	0
6	Reserved: always 0	0
5	CB Fault	0
4	Not supported: Always 0	0
3	Not supported: Always 0	0
2	Not supported: Always 0	0
1	Not supported: Always 0	0
0	Not supported: Always 0	0

STATUS_MFR_SPECIFIC (80h)

The STATUS_MFR_SPECIFIC command is a standard PMBus™ command that contains manufacturer specific status information. Accesses to this command should use the PMBus™ read byte protocol. To clear bits in this register, the underlying fault should be removed and a CLEAR_FAULTS command should be issued. The default loaded status does not create an SMB Alert State.

Table 15. STATUS_MFR_SPECIFIC Definitions

Bit	Meaning	Default
7	Circuit breaker fault	0
6	Ext. MOSFET shorted fault	0
5	Not Supported, Always 0	0
4	Defaults loaded (1)	1
3	Not supported: Always 0	0
2	Not supported: Always 0	0
1	Not supported: Always 0	0
0	Not supported: Always 0	0

(1) Bit 4, Defaults loaded, does not set an SMBAlert.

READ_EIN (86h)

The READ_EIN command is a standard PMBus command that returns information the host can use to calculate average input power consumption. Accesses to this command should use the PMBus Block Read protocol. Information provided by this command is independent of any device specific averaging period. Six bytes of data are returned by this command. The first two bytes are the two's complement, signed output of an accumulator that continuously sums samples of the instantaneous input power. These two data bytes are formatted in the DIRECT format. The third data byte is a count of the rollover events for the accumulator. This byte is an unsigned integer indicating the number of times that the accumulator has rolled over from it's maximum positive value (7FFFh) to zero. The last three data bytes are a 24 bit unsigned integer that counts the number of samples of the instantaneous input power that have been applied to the accumulator.

The combination of the accumulator and the rollover count may overflow within a few seconds. It is left to the host software to detect this overflow and handle it appropriately. Similarly, the sample count value will overflow, but this event only occurs once every few hours.

To convert the data obtained with the READ_EIN command to average power, first convert the accumulator and rollover count to an unsigned integer:

Accumulator_23 = (rollover_count << 15) + accumulator

overflow detection and handling should be done on the 23 bits of accumulator data and the sample count now. Data from the previous calculation should be saved and will be used in this calculation to get the unscaled average power:

$$\frac{\text{Accumulator_23 [n] - Accumulator_23 [n-1]}}{\text{Sample_count [n] - Sample_count [n-1]}} \tag{36}$$

Where:

accumulator_23 [n] = overflow corrected, 23 bit accumulator data from this read

Sample_count [n] = Sample count data from this read

accumulator_23[n-1]= overflow corrected, 23 bit accumulator data from previous read

Sample_count [n-1] = Sample Count data from previous read

unscaled Average Power is now in the same units as the data from the READ_PIN command. Coefficients from Table 43 are used to convert the Unscaled Average Power to Watts.

Table 16. READ_EIN

Bit	Meaning	Default
0	Sample Count High byte	0
1	Sample Count Mid byte	0
2	Sample Count Low byte	0
3	Power Accumulator Rollover Count	0
4	Power Accumulator High Byte	0
5	Power Accumulator Low Byte	0
6	Number of Bytes	6

READ_VIN (88h)

The READ_VIN command is a standard PMBus™ command that returns the 12-bit measured value of the input voltage. Reading this register should use the coefficients shown in Table 44. Accesses to this command should use the PMBus™ read word protocol. This value is also used internally for the VIN Over and Under Voltage Warning detection.

Table 17. READ_VIN Register

Value	Meaning	Default
0h – 0FFFh	Measured value for VIN	0000h

Copyright © 2012–2013, Texas Instruments Incorporated

READ_VOUT (8Bh)

The READ_VOUT command is a standard PMBus™ command that returns the 12-bit measured value of the output voltage. Reading this register should use the coefficients shown in Table 44. Accesses to this command should use the PMBus™ read word protocol. This value is also used internally for the VOUT Under Voltage Warning detection.

Table 18. READ_VOUT Register

Value	Meaning	Default
0h – 0FFFh	Measured value for VOUT	0000h

READ_IIN (89h)

The READ_IIN command is a standard PMBus™ command that returns the 12-bit measured value of the input current. Returns instantaneous current. Reading this register should use the coefficients shown in Table 44. Accesses to this command should use the PMBus™ read word protocol. This value is also mirrored at (D1H)

Table 19. READ_IIN Register

Value	Meaning	Default
0h – 0FFFh	Measured value for IIN	0000h

READ_PIN (97h)

The READ_IIN command is a standard PMBus™ command that returns the 12-bit measured value of the input current. Returns average power Reading this register should use the coefficients shown in Table 44. Accesses to this command should use the PMBus™ read word protocol. This value is also mirrored at (DFh)

Table 20. READ_PIN Register

Value	Meaning	Default
0h – 0FFFh	Measured value for PIN	0000h

READ_TEMPERATURE_1 (8Dh)

The READ_TEMPERATURE _1 command is a standard PMBus™ command that returns the signed value of the temperature measured by the external temperature sense diode. Reading this register should use the coefficients shown in Table 44. Accesses to this command should use the PMBus™ read word protocol. This value is also used internally for the Over Temperature Fault and Warning detection. This data has a range of -256°C to + 255°C after the coefficients are applied.

Table 21. READ_TEMPERATURE_1 Register

Value	Meaning	Default
0h – 0FFFh	Measured value for TEMPERATURE	0000h

MFR_ID (99h)

The MFR_ID command is a standard PMBus™ command that returns the identification of the manufacturer. To read the MFR_ID, use the PMBus™ block read protocol.

Table 22. MFR_ID Register

Byte	Name	Value
0	Number of bytes	02h
1	MFR ID-1	54h ‘T’
2	MFR ID-2	49h ‘I’

MFR_MODEL (9Ah)

The MFR_MODEL command is a standard PMBus™ command that returns the part number of the chip. To read the MFR_MODEL, use the PMBus™ block read protocol.

Table 23. MFR_MODEL Register

Byte	Name	Value
0	Number of bytes	08h
1	MFR ID-1	4Ch 'L'
2	MFR ID-2	4Dh 'M'
3	MFR ID-3	32h '2'
4	MFR ID-4	35h '5'
5	MFR ID-5	30h '0'
6	MFR ID-6	36h '6'
7	MFR ID-7	36h '6'
8	MFR ID-8	49h 'I'

MFR_REVISION (9Bh)

The MFR_REVISION command is a standard PMBus™ command that returns the revision level of the part. To read the MFR_REVISION, use the PMBus™ block read protocol.

Table 24. MFR_REVISION Register

Byte	Name	Value
0	Number of bytes	02h
1	MFR ID-1	41h 'A'
2	MFR ID-2	41h 'A'

Manufacturer Specific PMBus™ Commands

MFR_SPECIFIC_00: READ_VAUX (D0h)

The READ_VAUX command will report the 12-bit ADC measured auxiliary voltage. Voltages greater than or equal to 1.16V to ground will be reported at plus full scale (0FFFh). Voltages less than or equal to 0V referenced to ground will be reported as 0 (0000h). Coefficients for the VAUX value are dependent on the value of the external divider (if used). To read data from the READ_VAUX command, use the PMBus™ Read Word protocol.

Table 25. READ_VAUX Register

Value	Meaning	Default
0h – 0FFFh	Measured value for VAUX input	0000h

MFR_SPECIFIC_01: MFR_READ_IIN (D1h)

The MFR_READ_IIN command will report the 12-bit ADC measured current sense voltage. To read data from the MFR_READ_IIN command, use the PMBus™ Read Word protocol. Reading this register should use the coefficients shown in Table 44. Please see the section on coefficient calculations to calculate the values to use.

Table 26. MFR_READ_IIN Register

Value	Meaning	Default
0h – 0FFFh	Measured value for input current sense voltage	0000h

Copyright © 2012–2013, Texas Instruments Incorporated

MFR_SPECIFIC_02: MFR_READ_PIN (D2h)

The MFR_ READ_PIN command will report the upper 12 bits of the VIN x IIN product as measured by the 12-bit ADC. To read data from the MFR_READ_PIN command, use the PMBus™ Read Word protocol. Reading this register should use the coefficients shown in Table 44. Please see the section on coefficient calculations to calculate the values to use.

Table 27. MFR_READ_PIN Register

Value	Meaning	Default
0h – 0FFFh	Value for input current x input voltage	0000h

MFR_SPECIFIC_03: MFR_IN_OC_WARN_LIMIT (D3h)

The MFR_IIN_OC_ WARN_LIMIT PMBus™ command sets the input over-current warning threshold. In the event that the input current rises above the value set in this register, the IIN over-current flags are set in the status registers and the $\overline{\text{SMBA}}$ is asserted. To access the MFR_IIN_ OC_WARN_LIMIT register, use the PMBus™ Read/Write Word protocol. Reading/writing to this register should use the coefficients shown in Table 44.

Table 28. MFR_IIN_OC_WARN_LIMIT Register

Value	Meaning	Default
0h – 0FFFh	Value for input over-current warn limit	0FFFh
0FFFh	Input over-current warning disabled	n/a

MFR_SPECIFIC_04: MFR_PIN_OP_WARN_LIMIT (D4h)

The MFR_PIN_OP_WARN_LIMIT PMBus™ command sets the input over-power warning threshold. In the event that the input power rises above the value set in this register, the PIN Over-power flags are set in the status registers and the $\overline{\text{SMBA}}$ is asserted. To access the MFR_PIN_OP_WARN_LIMIT register, use the PMBus™ Read/Write Word protocol. Reading/writing to this register should use the coefficients shown in Table 44.

Table 29. MFR_PIN_OP_WARN_LIMIT Register

Value	Meaning	Default
0h – 0FFFh	Value for input over-power warn limit	0FFFh
0FFFh	Input over-power warning disabled	n/a

MFR_SPECIFIC_05: READ_PIN_PEAK (D5h)

The READ_PIN_PEAK command will report the maximum input power measured since a Power-On-Reset or the last CLEAR_PIN_PEAK command. To access the READ_PIN_PEAK command, use the PMBus™ Read Word protocol. Use the coefficients shown in Table 44.

Table 30. READ_PIN_PEAK Register

Value	Meaning	Default
0h – 0FFFh	Maximum value for input current x input voltage since reset or last clear	0h

MFR_SPECIFIC_06: CLEAR_PIN_PEAK (D6h)

The CLEAR_PIN_PEAK command will clear the PIN_PEAK register. This command uses the PMBus™ Send Byte protocol.

MFR_SPECIFIC_07: GATE_MASK (D7h)

The GATE_MASK register allows the hardware to prevent fault conditions from switching off the MOSFET. When the bit is high, the corresponding FAULT has no control over the MOSFET gate. All status registers will still be updated (STATUS, DIAGNOSTIC) and an $\overline{\text{SMBA}}$ will still be issued. This register is accessed with the PMBus™ Read / Write Byte protocol.

Copyright © 2012–2013, Texas Instruments Incorporated

WARNING

Inhibiting the MOSFET switch off in response to over-current or circuit breaker fault conditions will likely result in the destruction of the MOSFET! This functionality should be used with great care and supervision!

Table 31. GATE_MASK Register

Bit	NAME	Default
7	Not used, always 0	0
6	Not used, always 0	0
5	VIN UV FAULT	0
4	VIN OV FAULT	0
3	IIN/PFET FAULT	0
2	OVERTEMP FAULT	0
1	Not used, always 0	0
0	CIRCUIT BREAKER FAULT	0

The IIN/PFET Fault refers to the input current fault and the MOSFET power dissipation fault. There is no input power fault detection, only input power warning detection.

MFR_SPECIFIC_08: ALERT_MASK (D8h)

The ALERT_MASK is used to mask the $\overline{\text{SMBA}}$ when a specific fault or warning has occurred. Each bit corresponds to one of the 14 different analog and digital faults or warnings that would normally result in an $\overline{\text{SMBA}}$ being set. When the corresponding bit is high, that condition will not cause the $\overline{\text{SMBA}}$ to be asserted. If that condition occurs, the registers where that condition is captured will still be updated (STATUS registers, DIAGNOSTIC_WORD) and the external MOSFET gate control will still be active (VIN_OV_FAULT, VIN_UV_FAULT, IIN/PFET_FAULT, CB_FAULT, OT_FAULT). This register is accessed with the PMBus™ Read / Write Word protocol. The VIN UNDERVOLTGE FAULT flag will default to 1 on startup. However, it will be cleared to 0 after the first time the input voltage exceeds the resistor programmed UVLO threshold.

Table 32. ALERT_MASK Definitions

BIT	NAME	DEFAULT
15	VOUT UNDERVOLTAGE WARN	1
14	IIN LIMIT Warn	1
13	VIN UNDERVOLTAGE WARN	1
12	VIN OVERVOLTAGE WARN	1
11	$\overline{\text{POWER GOOD}}$	1
10	OVERTEMP WARN	1
9	Not Used, always 0	0
8	OVERPOWER LIMIT WARN	1
7	Not Used, always 0	0
6	EXT_MOSFET_SHORTED	0
5	VIN UNDERVOLTAGE FAULT(1)	0
4	VIN OVERVOLTAGE FAULT	0
3	IIN/PFET FAULT	0
2	OVERTEMPERATURE FAULT	1
1	CML FAULT (Communications Fault)	0
0	CIRCUIT BREAKER FAULT	0

(1) VIN_UV_FAULT initializes after power up as masked. When VIN exceeds the hardware threshold the mask bit is automatically cleared.

Copyright © 2012–2013, Texas Instruments Incorporated

MFR_SPECIFIC_09: DEVICE_SETUP (D9h)

The DEVICE_SETUP command may be used to override pin settings to define operation of the LM25066I/A under host control. This command is accessed with the PMBus™ read / write byte protocol.

Table 33. DEVICE_SETUP Byte Format

Bit	Name	Meaning
7:5	Retry setting	111 = Unlimited retries
		110 = Retry 16 times
		101 = Retry 8 times
		100 = Retry 4 times
		011 = Retry 2 times
		010 = Retry 1 time
		001 = No retries
		000 = Pin configured retries
4	Current limit setting	0 = Low setting (25mV)
		1 = High setting (46mV)
3	CB/CL Ratio	0 = Low setting (1.8x)
		1 = High setting (3.6x)
2	Current limit Configuration	0 = Use pin settings
		1 = Use SMBus settings
1	Circuit Breaker Configuration	0 = Use pin settings
		1 = Use SMBus settings
0	Unused	

In order to configure the Current Limit Setting via this register, it is necessary to set the Current Limit Configuration bit (2) to 1 to enable the register to control the current limit function and the Current Limit Setting bit (4) to select the desired setting. Similarly, in order to control the Circuit Breaker via this register, it is necessary to set the Circuit Breaker Configuration bit (1) to 1 to enable the register to control the Circuit Breaker Setting, and the Circuit Breaker / Current Limit Ratio bit (3) to the desired value. If the respective Configuration bits are not set, the Settings will be ignored and the pin set values used.

The Current Limit Configuration effects the coefficients used for the Current and Power measurements and warning registers.

MFR_SPECIFIC_10: BLOCK_READ (DAh)

The BLOCK_READ command concatenates the DIAGNOSTIC_WORD with input and output telemetry information (IIN, VOUT, VIN, PIN) as well as TEMPERATURE to capture all of the operating information of the LM25066I/A in a single SMBus transaction. The block is 12 bytes long with telemetry information being sent out in the same manner as if an individual READ_XXX command had been issued (shown below). The contents of the block read register are updated every clock cycle (85ns) as long as the SMBus interface is idle. BLOCK_READ also specifies that the VIN, VOUT, IIN and PIN measurements are all time-aligned whereas there is a chance they may not be if read with individual PMBus™ commands.

The BLOCK_READ command is read via the PMBus™ block read protocol.

Table 34. BLOCK_READ Register Format

Byte Count (always 12)	(1 byte)
DIAGNOSTIC_WORD	(1 Word)
IIN_BLOCK	(1 Word)
VOUT_BLOCK	(1 Word)
VIN_BLOCK	(1 Word)
PIN_BLOCK	(1 Word)
TEMP_BLOCK	(1 Word)

Copyright © 2012–2013, Texas Instruments Incorporated

MFR_SPECIFIC_11: SAMPLES_FOR_AVG (DBh)

The SAMPLES_FOR_AVERAGE is a manufacturer specific command for setting the number of samples used in computing the average values for IIN, VIN, VOUT, PIN. The decimal equivalent of the AVGN nibble is the power of 2 samples (e.g. AVGN=12 equates to 4096 samples used in computing the average). The LM25066I/A supports average numbers of 1, 2, 4, 8, 16, 32, 64, 128, 256, 512, 1024, 2048, 4096. The SAMPLES_FOR_AVG number applies to average values of IIN, VIN, VOUT, PIN simultaneously. The LM25066I/A uses simple averaging. This is accomplished by summing consecutive results up to the number programmed, then dividing by the number of samples. Averaging is calculated according to the following sequence:

$$Y = (X_{(N)} + X_{(N-1)} + ... + X_{(0)}) / 2^{AVGN} \quad (37)$$

When the averaging has reached the end of a sequence (for example, 4096 samples are averaged), then a whole new sequence begins that will require the same number of samples (in this example, 4096) to be taken before the new average is ready.

Table 35. SAMPLES_FOR_AVG Register

AVGN	$N=2^{AVGN}$ averages	Averaging/Register Update Period (ms)
0000	1	1
0001	2	2
0010	4	4
0011	8	8
0100	16	16
0101	32	32
0110	64	64
0111	128	128
1000	256	256
1001	512	512
1010	1024	1024
1011	2048	2048
1100	4096	4096

Note that a change in the SAMPLES_FOR_AVG register will not be reflected in the average telemetry measurements until the present averaging interval has completed. The default setting for AVGN is 0000 and therefore the average telemetry will mirror the instantaneous telemetry until a value higher than zero is programmed.

The SAMPLES_FOR_AVG register is accessed via the PMBus™ read / write byte protocol.

Table 36. SAMPLES_FOR_AVG Register

Value	Meaning	Default
0h – 0Ch	Exponent (AVGN) for number of samples to average over	00h

MFR_SPECIFIC_12: READ_AVG_VIN (DCh)

The READ_AVG_VIN command will report the 12-bit ADC measured input average voltage. If the data is not ready, the returned value will be the previous averaged data. However, if there is no previously averaged data, the default value (0000h) will be returned. This data is read with the PMBus™ Read Word protocol. This register should use the coefficients shown in Table 44.

Table 37. READ_AVG_VIN Register

Value	Meaning	Default
0h – 0FFFh	Average of measured values for input voltage	0000h

 Copyright © 2012–2013, Texas Instruments Incorporated

MFR_SPECIFIC_13: READ_AVG_VOUT (DDh)

The READ_AVG_VOUT command will report the 12-bit ADC measured average output voltage. The returned value will be the default value (0000h) or previous data when the average data is not ready. This data is read with the PMBus™ Read Word protocol. This register should use the coefficients shown in Table 44.

Table 38. READ_AVG_VOUT Register

Value	Meaning	Default
0h – 0FFFh	Average of measured values for output voltage	0000h

MFR_SPECIFIC_14: READ_AVG_IIN (DEh)

The READ AVG_IIN command will report the 12-bit ADC measured current sense average voltage. The returned value will be the default value (0000h) or previous data when the average data is not ready. This data is read with the PMBus™ Read Word protocol. This register should use the coefficients shown in Table 44.

Table 39. READ_AVG_IIN Register

Value	Meaning	Default
0h – 0FFFh	Average of measured values for current sense voltage	0000h

MFR_SPECIFIC_15: READ_AVG_PIN (DFh)

The READ_AVG_PIN command will report the upper 12 bits of the average VIN x IIN product as measured by the 12-bit ADC. You will read the default value (0000h) or previous data when the average data is not ready. This data is read with the PMBus™ Read Word protocol. This register should use the coefficients shown in Table 44.

Table 40. READ_AVG_PIN Register

Value	Meaning	Default
0h – 0FFFh	Average of measured value for input voltage x input current sense voltage	0000h

MFR_SPECIFIC_16: BLACK_BOX_READ (E0h)

The BLACK_BOX_READ command retrieves the BLOCK_READ data which was latched in at the first assertion of $\overline{\text{SMBA}}$. It is re-armed with the CLEAR_FAULTS command. It is the same format as the BLOCK_READ registers, the only difference being that its contents are updated with the $\overline{\text{SMBA}}$ edge rather than the internal clock edge. This command is read with the PMBus™ Block Read protocol.

MFR_SPECIFIC_17: READ_DIAGNOSTIC_WORD (E1h)

The READ_DIAGNOSTIC_WORD PMBus command will report all of the LM25066I/A faults and warnings in a single read operation. The standard response to the assertion of the $\overline{\text{SMBA}}$ signal of issuing multiple read requests to various status registers can be replaced by a single word read to the DIAGNOSTIC_WORD register. The READ_DIAGNOSTIC_WORD command should be read with the PMBus™ Read Word protocol. The DIAGNOSTIC_WORD is also returned in the BLOCK_READ, BLACK_BOX_READ, and AVG_BLOCK_READ operations.

Table 41. READ_DIAGNOSTIC_WORD Format

Bit	Meaning	Default
15	VOUT_UNDERVOLTAGE_WARN	0
14	IIN_OP_WARN	0
13	VIN_UNDERVOLTAGE_WARN	0
12	VIN_OVERVOLTAGE_WARN	0
11	$\overline{\text{POWER GOOD}}$	1
10	OVER_TEMPERATURE_WARN	0

Table 41. READ_DIAGNOSTIC_WORD Format (continued)

Bit	Meaning	Default
9	TIMER_LATCHED_OFF	0
8	EXT_MOSFET_SHORTED	0
7	CONFIG_PRESET	1
6	DEVICE_OFF	1
5	VIN_UNDERVOLTAGE_FAULT	1
4	VIN_OVERVOLTAGE_FAULT	0
3	IIN_OC/PFET_OP_FAULT	0
2	OVER_TEMPERATURE_FAULT	0
1	CML_FAULT	0
0	CIRCUIT_BREAKER_FAULT	0

MFR_SPECIFIC_18: AVG_BLOCK_READ (E2h)

The AVG_BLOCK_READ command concatenates the DIAGNOSTIC_WORD with input and output average telemetry information (IIN, VOUT, VIN, PIN) as well as TEMPERATURE to capture all of the operating information of the part in a single PMBus™ transaction. The block is 12 bytes long with telemetry information being sent out in the same manner as if an individual READ_AVG_XXX command had been issued (shown below). AVG_BLOCK_READ also specifies that the VIN, VOUT, PIN, and IIN measurements are all time-aligned whereas there is a chance they may not be if read with individual PMBus™ commands. To read data from the AVG_BLOCK_READ command, use the SMBus Block Read protocol.

Table 42. AVG_BLOCK_READ Register Format

Byte Count (always 12)	(1 byte)
DIAGNOSTIC_WORD	(1 word)
AVG_IIN	(1 word)
AVG_VOUT	(1 word)
AVG_VIN	(1 word)
AVG_PIN	(1 word)
TEMPERATURE	(1 word)

Copyright © 2012–2013, Texas Instruments Incorporated

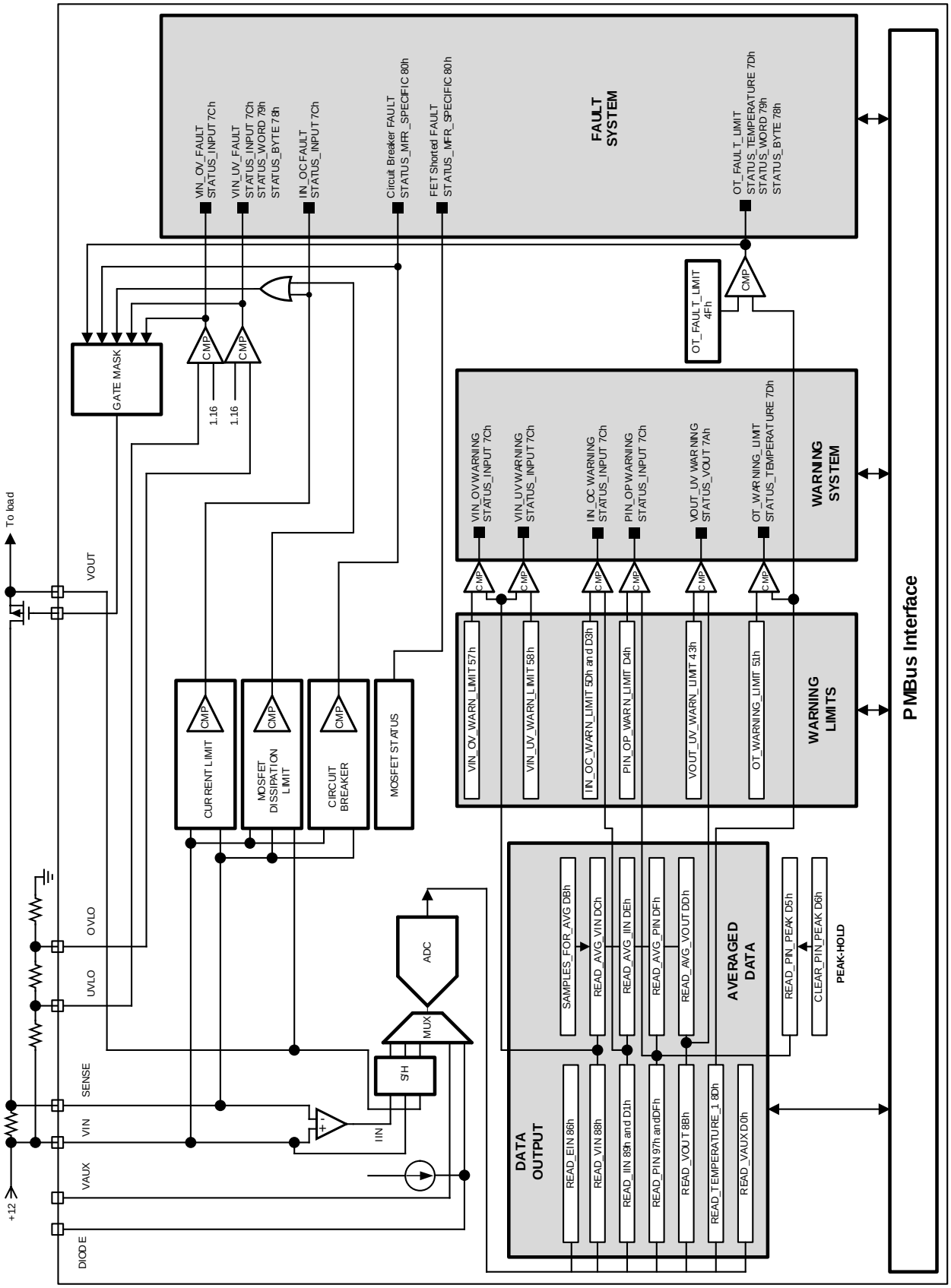

Figure 49. Command/Register and Alert Flow Diagram

Reading and Writing Telemetry Data and Warning Thresholds

All measured telemetry data and user programmed warning thresholds are communicated in 12 bit two's compliment binary numbers read/written in 2 byte increments conforming to the Direct format as described in section 8.3.3 of the PMBus™ Power System Management Protocol Specification 1.1 (Part II). The organization of the bits in the telemetry or warning word is shown in Table 43, where Bit_11 is the most significant bit (MSB) and Bit_0 is the least significant bit (LSB). The decimal equivalent of all warning and telemetry words are constrained to be within the range of 0 to 4095, with the exception of temperature. The decimal equivalent value of the temperature word ranges from 0 to 65535.

Table 43. Telemetry and Warning Word Format

Byte	B7	B6	B5	B4	B3	B2	B1	B0
1	Bit_7	Bit_6	Bit_5	Bit_4	Bit_3	Bit_2	Bit_1	Bit_0
2	0	0	0	0	Bit_11	Bit_10	Bit_9	Bit_8

Conversion from direct format to real world dimensions of current, voltage, power, and temperature is accomplished by determining appropriate coefficients as described in section 7.2.1 of the PMBus™ Power System Management Protocol Specification 1.1 (Part II). According to this specification, the host system converts the values received into a reading of volts, amperes, watts, or other units using the following relationship:

$$X = \frac{1}{m}(Y \times 10^{-R} - b) \tag{38}$$

where:

X: the calculated "real world" value (volts, amps, watt, etc.)

m: the slope coefficient

Y: a two byte two's complement integer received from device

b: the offset, a two byte two's complement integer

R: the exponent, a one byte two's complement integer

R is only necessary in systems where m is required to be an integer (for example, where m may be stored in a register in an integrated circuit). In those cases, R only needs to be large enough to yield the desired accuracy.

Table 44. Current, Power and Warning Conversion Coefficients (R_S in mΩ)

Commands	Condition	Format	Number of Data Bytes	m	b	R	Unit
READ_VIN, READ_AVG_VIN VIN_OV_WARN_LIMIT VIN_UV_WARN_LIMIT		DIRECT	2	22070	-1800	-2	V
READ_VOUT, READ_AVG_VOUT VOUT_UV_WARN_LIMIT		DIRECT	2	22070	-1800	-2	V
READ_VAUX		DIRECT	2	3546	-3	0	V
READ_IIN, READ_AVG_IIN MFR_IIN_OC_WARN_LIMIT	CL = GND	DIRECT	2	13661 x R_S	-5200	-2	A
READ_IIN, READ_AVG_IIN MFR_IIN_OC_WARN_LIMIT	CL = VDD	DIRECT	2	6854 x R_S	-3100	-2	A
READ_PIN, READ_AVG_PIN, READ_PIN_PEAK MFR_PIN_OP_WARN_LIMIT	CL = GND	DIRECT	2	736 x R_S	-3300	-2	W
READ_PIN, READ_AVG_PIN, READ_PIN_PEAK MFR_PIN_OP_WARN_LIMIT	CL = VDD	DIRECT	2	369 x R_S	-1900	-2	W
READ_TEMPERATURE_1 OT_WARN_LIMIT OT_FAULT_LIMIT		DIRECT	2	16000	0	-3	°C
READ_PIN, READ_AVG_PIN, READ_PIN_PEAK MFR_PIN_OP_WARN_LIMIT	CL = VDD	DIRECT	2	369 x R_S	-1900	-2	W

Copyright © 2012–2013, Texas Instruments Incorporated

Table 45. Current, Power and Warning Conversion Coefficients (R_S in mΩ)

Commands	Condition	Format	Number of Data Bytes	m	b	R	Unit
*READ_IIN, READ_AVG_IIN MFR_IIN_OC_WARN_LIMIT	CL = GND	DIRECT	2	13661 x R_S	-5200	-2	A
*READ_IIN, READ_AVG_IIN MFR_IIN_OC_WARN_LIMIT	CL = VDD	DIRECT	2	6854 x R_S	-3100	-2	A
*READ_PIN, READ_AVG_PIN, READ_PIN_PEAK MFR_PIN_OP_WARN_LIMIT	CL = GND	DIRECT	2	736 x R_S	-3300	-2	W

Care must be taken to adjust the exponent coefficient, R, such that the value of m remains within the range of -32768 to +32767. For example, if a 5 mΩ sense resistor is used, the correct coefficients for the READ_IIN command with CL = VDD would be m = 6830, b = -310, R = -1.

A Note on the "b" Coefficient

Since b coefficients represent offset, for simplification b is set to zero in the following discussions.

Determining Telemetry Coefficients Empirically with Linear Fit

The coefficients for telemetry measurements and warning thresholds presented in Table 44 are adequate for the majority of applications. Current and power coefficients must be calculated per application as they are dependent on the value of the sense resistor, R_S, used. Table 45 provides the equations necessary for calculating the current and power coefficients for the general case. The small signal nature of the current measurement make it and the power measurement more susceptible to PCB parasitics than other telemetry channels. This may cause slight variations in the optimum coefficients (m, b, R) for converting from Direct Format digital values to real-world values (e.g. Amps and Watts). The optimum coefficients can be determined empirically for a specific application and PCB layout using two or more measurements of the telemetry channel of interest. The current coefficients can be determined using the following method:

1. While the LM25066I/A is in normal operation, measure the voltage across the sense resistor using kelvin test points and a high accuracy DVM while controlling the load current. Record the integer value returned by the READ_AVG_IIN command (with the SAMPLES_FOR_AVG set to a value greater than 0) for two or more voltages across the sense resistor. For best results, the individual READ_AVG_IIN measurements should span nearly the full scale range of the current (for example, voltage across R_S of 5 mV and 20 mV).
2. Convert the measured voltages to currents by dividing them by the value of R_S. For best accuracy, the value of R_S should be measured. Table 46 assumes a sense resistor value of 5 mΩ.

Table 46. Measurements for linear fit determination of current coefficients

Measured voltage across R_S (V)	Measured Current (A)	READ_AVG_IIN (integer value)
0.005	1	648
0.01	2	1331
0.02	4	2698

3. Using the spreadsheet or math program of your choice, determine the slope and the y-intercept values returned by the READ_AVG_IIN command versus the measured current. For the data shown in Table 46:
   – READ_AVG_IIN value = slope x (Measured Current) + (y-intercept)
   – slope = 683.4
   – y-intercept = -35.5
4. To determine the '**m**' coefficient, simply shift the decimal point of the calculated slope to arrive at an integer with a suitable number of significant digits for accuracy (typically 4) while staying with the range of -32768 to +32767. This shift in the decimal point equates to the '**R**' coefficient. For the slope value shown above, the decimal point would be shifted to the right once hence **R** = -1.
5. Once the '**R**' coefficient has been determined, the '**b**' coefficient is found by multiplying the y-intercept by 10^{-R}. In this case the value of **b** = -355.
   – Calculated Current Coefficients:
   – **m** = 6834

– **b** = -355
– **R** = -1

$$X = \frac{1}{m}(Y \times 10^{-R} - b) \quad (39)$$

where:

X: the calculated "real world" value (volts, amps, watts, temperature)

m: the slope coefficient, a the two byte two's complement integer

Y: a two byte, two's complement integer received from device

b: the offset, a two byte two's complement integer

R: the exponent, a one byte two's complement integer

The above procedure can be repeated to determine the coefficients of any telemetry channel simply by substituting measured current for some other parameter (e.g. power, voltage, etc.).

Writing Telemetry Data

There are several locations that will require writing data if their optional usage is desired. Use the same coefficients previously calculated for your application and apply them using this method as prescribed by the PMBus™ revision section 7.2.2 "Sending a Value"

$$Y = (mX + b) \times 10^{R} \quad (40)$$

where:

X: the calculated "real world" value (volts, amps, watts, temperature)

m: the slope coefficient, a two byte two's complement integer

Y: a two byte two's complement integer received from device

b: the offset, a two byte two's complement integer

R: the exponent, a one byte two's complement integer

PMBus™ Address Lines (ADR0, ADR1, ADR2)

The three address lines are to be set high (connect to VDD), low (connect to GND),open (connect to GND) to select one of 27 addresses for communicating with the LM25066I/A. Table 47 depicts 7-bit addresses (eighth bit is read/write bit):

Table 47. Device Addressing

ADR2	ADR1	ADR0	Decoded Address
Z	Z	Z	40h
Z	Z	0	41h
Z	Z	1	42h
Z	0	Z	43h
Z	0	0	44h
Z	0	1	45h
Z	1	Z	46h
Z	1	0	47h
Z	1	1	10h
0	Z	Z	11h
0	Z	0	12h
0	Z	1	13h
0	0	Z	14h
0	0	0	15h
0	0	1	16h

Copyright © 2012–2013, Texas Instruments Incorporated

Table 47. Device Addressing (continued)

ADR2	ADR1	ADR0	Decoded Address
0	1	Z	17h
0	1	0	50h
0	1	1	51h
1	Z	Z	52h
1	Z	0	53h
1	Z	1	54h
1	0	Z	55h
1	0	0	56h
1	0	1	57h
1	1	Z	58h
1	1	0	59h
1	1	1	5Ah

SMBus Communications Timing Requirements

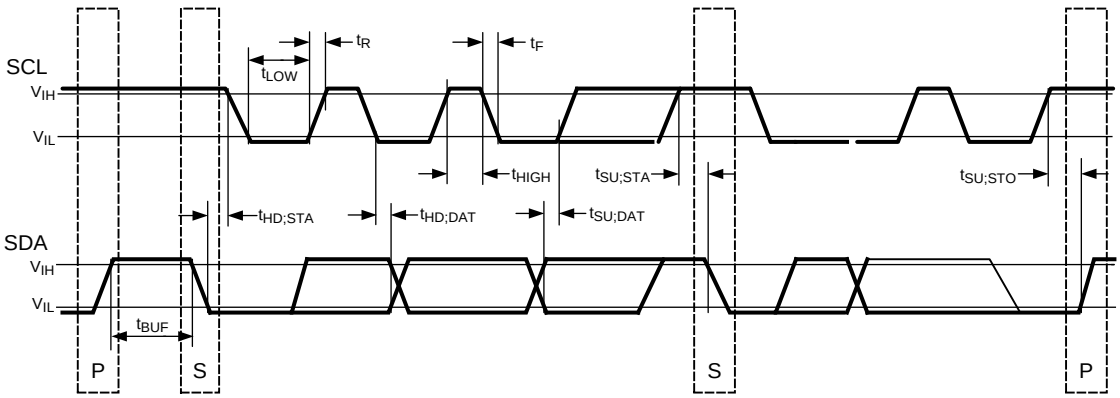

Figure 50. SMBus Timing Diagram

Table 48. SMBus Timing Definition

Symbol	Parameter	Limits		Unit	Comments
		Min	Max		
F_{SMB}	SMBus Operating Frequency	10	400	kHz	
T_{BUF}	Bus free time between Stop and Start Condition	1.3		µs	
$T_{HD:STA}$	Hold time after (Repeated) Start Condition. After this period, the first clock is generated.	0.6		µs	
$T_{SU:STA}$	Repeated Start Condition setup time	0.6		µs	
$T_{SU:STO}$	Stop Condition setup time	0.6		µs	
$T_{HD:DAT}$	Data hold time	300		ns	
$T_{SU:DAT}$	Data setup time	100		ns	
$T_{TIMEOUT}$	Clock low time-out	25	35	ms	(1)
T_{LOW}	Clock low period	1.5		µs	
T_{HIGH}	Clock high period	0.6		µs	(2)

(1) Devices participating in a transfer will timeout when any clock low exceeds the value of $T_{TIMEOUT,MIN}$ of 25 ms. Devices that have detected a timeout condition must reset the communication no later than $T_{TIMEOUT,MAX}$ of 35 ms. The maximum value must be adhered to by both a master and a slave as it incorporates the cumulative stretch limit for both a master (10ms) and a slave (25ms).
(2) $T_{HIGH\ MAX}$ provides a simple method for devices to detect bus idle conditions.

Copyright © 2012–2013, Texas Instruments Incorporated

Table 48. SMBus Timing Definition (continued)

Symbol	Parameter	Limits		Unit	Comments
		Min	Max		
$T_{LOW:SEXT}$	Cumulative clock low extend time (slave device)		25	ms	(3)
$T_{LOW:MEXT}$	Cumulative low extend time (master device)		10	ms	(4)
T_F	Clock or Data Fall Time	20	300	ns	(5)
T_R	Clock or Data Rise Time	20	300	ns	(5)

(3) $T_{LOW:SEXT}$ is the cumulative time a slave device is allowed to extend the clock cycles in one message from the initial start to the stop. If a slave exceeds this time, it is expected to release both its clock and data lines and reset itself.
(4) $T_{LOW:MEXT}$ is the cumulative time a master device is allowed to extend its clock cycles within each byte of a message as defined from start-to-ack, ack-to-ack, or ack-to-stop.
(5) Rise and fall time is defined as follows:• T_R = (V_{ILMAX} – 0.15) to (V_{IHMIN} + 0.15)• T_F = 0.9 VDD to (V_{ILMAX} – 0.15)

$\overline{\text{SMBA}}$ Response

The $\overline{\text{SMBA}}$ effectively has two masks:

1. The Alert Mask Register at D8h, and

2. The ARA Automatic Mask.

The ARA Automatic Mask is a mask that is set in response to a successful ARA read. An ARA read operation returns the PMBus™ address of the lowest addressed part on the bus that has its $\overline{\text{SMBA}}$ asserted. A successful ARA read means that THIS part was the one that returned its address. When a part responds to the ARA read, it releases the $\overline{\text{SMBA}}$ signal. When the last part on the bus that has an $\overline{\text{SMBA}}$ set has successfully reported its address, the $\overline{\text{SMBA}}$ signal will de-assert.

The way that the LM25066I/A releases the $\overline{\text{SMBA}}$ signal is by setting the ARA Automatic mask bit for all fault conditions present at the time of the ARA read. All status registers will still show the fault condition, but it will not generate an $\overline{\text{SMBA}}$ on that fault again until the ARA Automatic mask is cleared by the host issuing a Clear Fault command to this part. This should be done as a routine part of servicing an $\overline{\text{SMBA}}$ condition on a part, even if the ARA read is not done. Figure 51 depicts a schematic version of this flow.

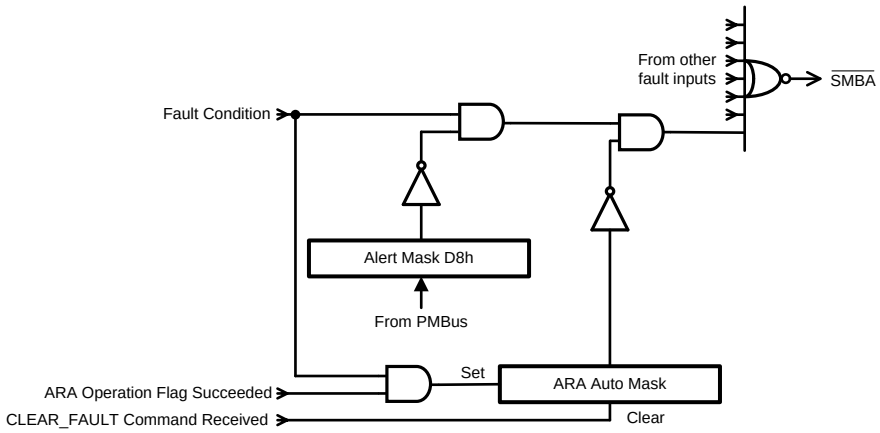

Figure 51. Typical Flow Schematic for $\overline{\text{SMBA}}$ Fault

Copyright © 2012–2013, Texas Instruments Incorporated

REVISION HISTORY

Changes from Revision B (March 2013) to Revision C	Page
• Changed layout of National Data Sheet to TI format	52

PACKAGING INFORMATION

Orderable Device	Status (1)	Package Type	Package Drawing	Pins	Package Qty	Eco Plan (2)	Lead/Ball Finish (6)	MSL Peak Temp (3)	Op Temp (°C)	Device Marking (4/5)	Samples
LM25066IAPSQ/NOPB	ACTIVE	WQFN	NHZ	24	1000	Green (RoHS & no Sb/Br)	CU SN	Level-3-260C-168 HR	-40 to 125	25066IA	Samples
LM25066IAPSQE/NOPB	ACTIVE	WQFN	NHZ	24	250	Green (RoHS & no Sb/Br)	CU SN	Level-3-260C-168 HR	-40 to 125	25066IA	Samples
LM25066IAPSQX/NOPB	ACTIVE	WQFN	NHZ	24	4500	Green (RoHS & no Sb/Br)	CU SN	Level-3-260C-168 HR	-40 to 125	25066IA	Samples
LM25066IPSQ/NOPB	ACTIVE	WQFN	NHZ	24	1000	Green (RoHS & no Sb/Br)	CU SN	Level-3-260C-168 HR	-40 to 125	25066IS	Samples
LM25066IPSQE/NOPB	ACTIVE	WQFN	NHZ	24	250	Green (RoHS & no Sb/Br)	CU SN	Level-3-260C-168 HR	-40 to 125	25066IS	Samples
LM25066IPSQX/NOPB	ACTIVE	WQFN	NHZ	24	4500	Green (RoHS & no Sb/Br)	CU SN	Level-3-260C-168 HR	-40 to 125	25066IS	Samples

(1) The marketing status values are defined as follows:
ACTIVE: Product device recommended for new designs.
LIFEBUY: TI has announced that the device will be discontinued, and a lifetime-buy period is in effect.
NRND: Not recommended for new designs. Device is in production to support existing customers, but TI does not recommend using this part in a new design.
PREVIEW: Device has been announced but is not in production. Samples may or may not be available.
OBSOLETE: TI has discontinued the production of the device.

(2) Eco Plan - The planned eco-friendly classification: Pb-Free (RoHS), Pb-Free (RoHS Exempt), or Green (RoHS & no Sb/Br) - please check http://www.ti.com/productcontent for the latest availability information and additional product content details.
TBD: The Pb-Free/Green conversion plan has not been defined.
Pb-Free (RoHS): TI's terms "Lead-Free" or "Pb-Free" mean semiconductor products that are compatible with the current RoHS requirements for all 6 substances, including the requirement that lead not exceed 0.1% by weight in homogeneous materials. Where designed to be soldered at high temperatures, TI Pb-Free products are suitable for use in specified lead-free processes.
Pb-Free (RoHS Exempt): This component has a RoHS exemption for either 1) lead-based flip-chip solder bumps used between the die and package, or 2) lead-based die adhesive used between the die and leadframe. The component is otherwise considered Pb-Free (RoHS compatible) as defined above.
Green (RoHS & no Sb/Br): TI defines "Green" to mean Pb-Free (RoHS compatible), and free of Bromine (Br) and Antimony (Sb) based flame retardants (Br or Sb do not exceed 0.1% by weight in homogeneous material)

(3) MSL, Peak Temp. - The Moisture Sensitivity Level rating according to the JEDEC industry standard classifications, and peak solder temperature.

(4) There may be additional marking, which relates to the logo, the lot trace code information, or the environmental category on the device.

(5) Multiple Device Markings will be inside parentheses. Only one Device Marking contained in parentheses and separated by a "~" will appear on a device. If a line is indented then it is a continuation of the previous line and the two combined represent the entire Device Marking for that device.

(6) Lead/Ball Finish - Orderable Devices may have multiple material finish options. Finish options are separated by a vertical ruled line. Lead/Ball Finish values may wrap to two lines if the finish value exceeds the maximum column width.

Important Information and Disclaimer: The information provided on this page represents TI's knowledge and belief as of the date that it is provided. TI bases its knowledge and belief on information provided by third parties, and makes no representation or warranty as to the accuracy of such information. Efforts are underway to better integrate information from third parties. TI has taken and continues to take reasonable steps to provide representative and accurate information but may not have conducted destructive testing or chemical analysis on incoming materials and chemicals. TI and TI suppliers consider certain information to be proprietary, and thus CAS numbers and other limited information may not be available for release.

In no event shall TI's liability arising out of such information exceed the total purchase price of the TI part(s) at issue in this document sold by TI to Customer on an annual basis.

TAPE AND REEL INFORMATION

REEL DIMENSIONS

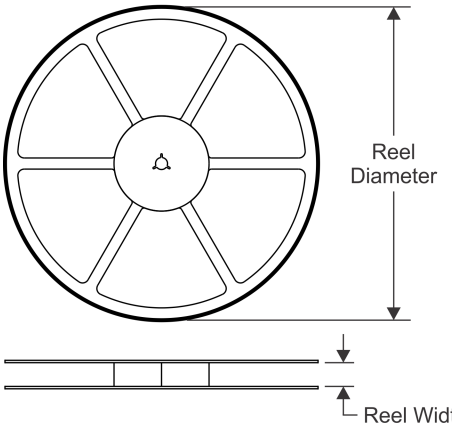

TAPE DIMENSIONS

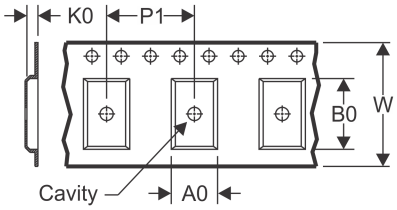

A0	Dimension designed to accommodate the component width
B0	Dimension designed to accommodate the component length
K0	Dimension designed to accommodate the component thickness
W	Overall width of the carrier tape
P1	Pitch between successive cavity centers

QUADRANT ASSIGNMENTS FOR PIN 1 ORIENTATION IN TAPE

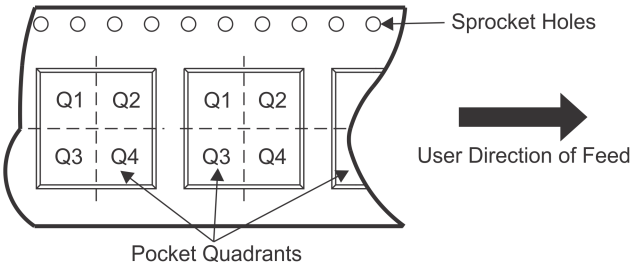

*All dimensions are nominal

Device	Package Type	Package Drawing	Pins	SPQ	Reel Diameter (mm)	Reel Width W1 (mm)	A0 (mm)	B0 (mm)	K0 (mm)	P1 (mm)	W (mm)	Pin1 Quadrant
LM25066IAPSQ/NOPB	WQFN	NHZ	24	1000	178.0	12.4	4.3	5.3	1.3	8.0	12.0	Q1
LM25066IAPSQE/NOPB	WQFN	NHZ	24	250	178.0	12.4	4.3	5.3	1.3	8.0	12.0	Q1
LM25066IAPSQX/NOPB	WQFN	NHZ	24	4500	330.0	12.4	4.3	5.3	1.3	8.0	12.0	Q1
LM25066IPSQ/NOPB	WQFN	NHZ	24	1000	178.0	12.4	4.3	5.3	1.3	8.0	12.0	Q1
LM25066IPSQE/NOPB	WQFN	NHZ	24	250	178.0	12.4	4.3	5.3	1.3	8.0	12.0	Q1
LM25066IPSQX/NOPB	WQFN	NHZ	24	4500	330.0	12.4	4.3	5.3	1.3	8.0	12.0	Q1

TAPE AND REEL BOX DIMENSIONS

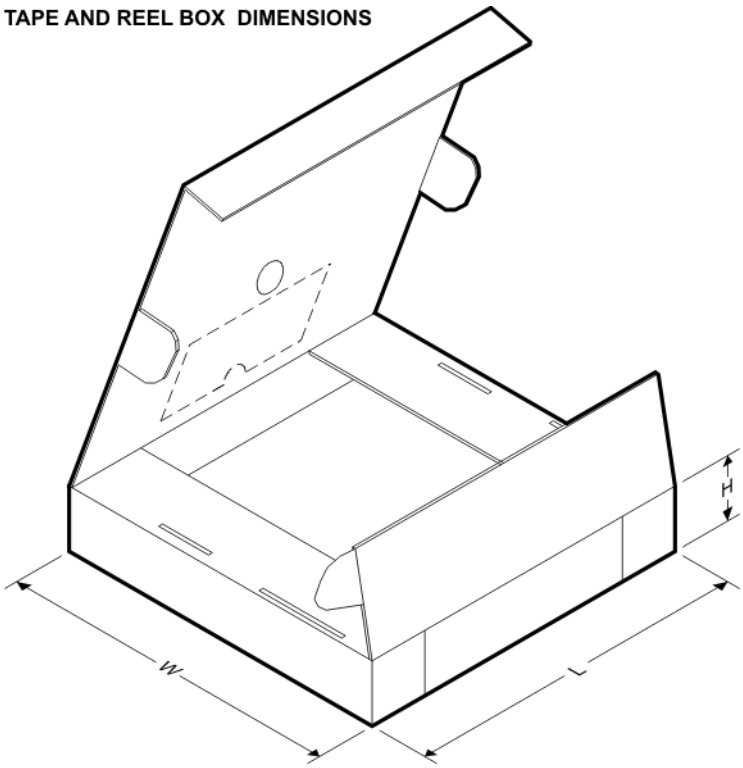

*All dimensions are nominal

Device	Package Type	Package Drawing	Pins	SPQ	Length (mm)	Width (mm)	Height (mm)
LM25066IAPSQ/NOPB	WQFN	NHZ	24	1000	213.0	191.0	55.0
LM25066IAPSQE/NOPB	WQFN	NHZ	24	250	213.0	191.0	55.0
LM25066IAPSQX/NOPB	WQFN	NHZ	24	4500	367.0	367.0	35.0
LM25066IPSQ/NOPB	WQFN	NHZ	24	1000	213.0	191.0	55.0
LM25066IPSQE/NOPB	WQFN	NHZ	24	250	213.0	191.0	55.0
LM25066IPSQX/NOPB	WQFN	NHZ	24	4500	367.0	367.0	35.0

NHZ0024B

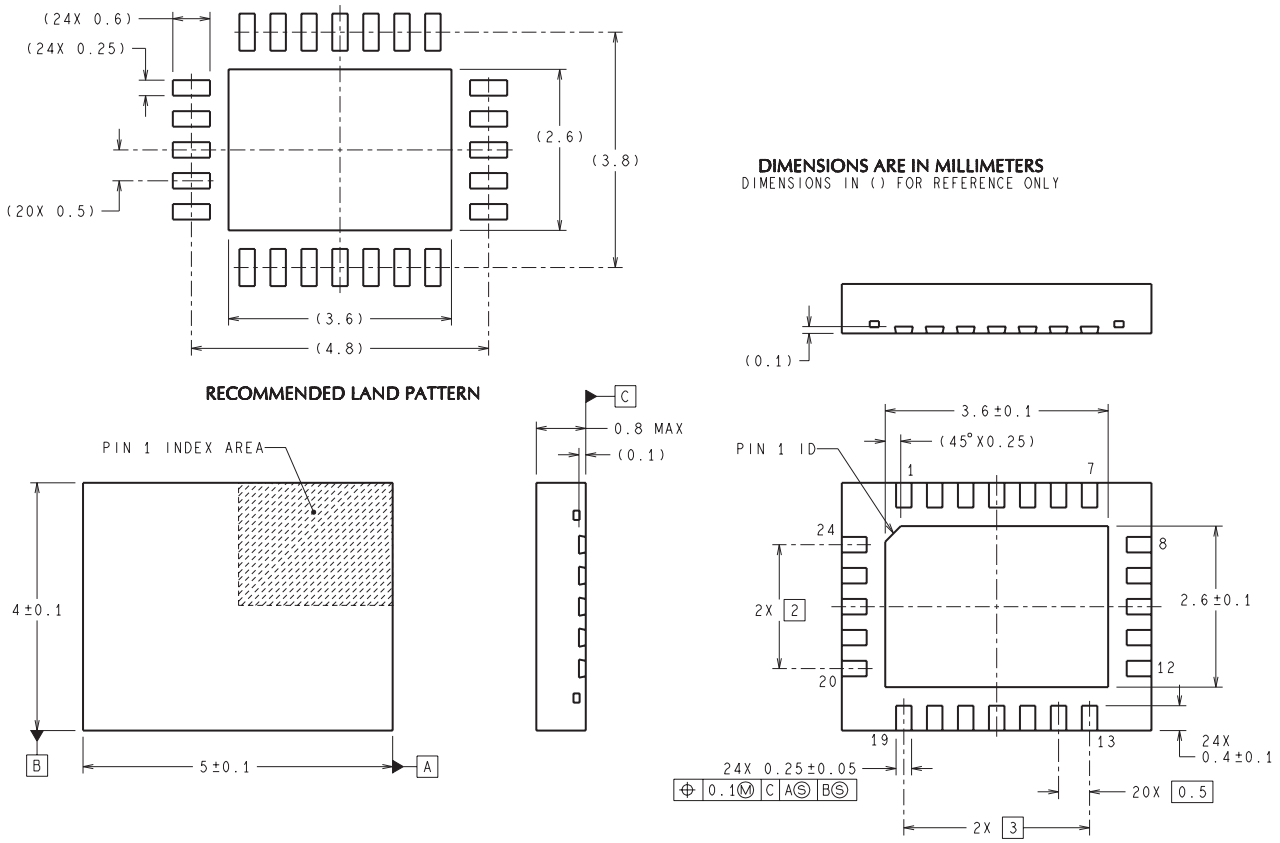

SQA24B (Rev A)

IMPORTANT NOTICE

Texas Instruments Incorporated and its subsidiaries (TI) reserve the right to make corrections, enhancements, improvements and other changes to its semiconductor products and services per JESD46, latest issue, and to discontinue any product or service per JESD48, latest issue. Buyers should obtain the latest relevant information before placing orders and should verify that such information is current and complete. All semiconductor products (also referred to herein as “components”) are sold subject to TI’s terms and conditions of sale supplied at the time of order acknowledgment.

TI warrants performance of its components to the specifications applicable at the time of sale, in accordance with the warranty in TI’s terms and conditions of sale of semiconductor products. Testing and other quality control techniques are used to the extent TI deems necessary to support this warranty. Except where mandated by applicable law, testing of all parameters of each component is not necessarily performed.

TI assumes no liability for applications assistance or the design of Buyers’ products. Buyers are responsible for their products and applications using TI components. To minimize the risks associated with Buyers’ products and applications, Buyers should provide adequate design and operating safeguards.

TI does not warrant or represent that any license, either express or implied, is granted under any patent right, copyright, mask work right, or other intellectual property right relating to any combination, machine, or process in which TI components or services are used. Information published by TI regarding third-party products or services does not constitute a license to use such products or services or a warranty or endorsement thereof. Use of such information may require a license from a third party under the patents or other intellectual property of the third party, or a license from TI under the patents or other intellectual property of TI.

Reproduction of significant portions of TI information in TI data books or data sheets is permissible only if reproduction is without alteration and is accompanied by all associated warranties, conditions, limitations, and notices. TI is not responsible or liable for such altered documentation. Information of third parties may be subject to additional restrictions.

Resale of TI components or services with statements different from or beyond the parameters stated by TI for that component or service voids all express and any implied warranties for the associated TI component or service and is an unfair and deceptive business practice. TI is not responsible or liable for any such statements.

Buyer acknowledges and agrees that it is solely responsible for compliance with all legal, regulatory and safety-related requirements concerning its products, and any use of TI components in its applications, notwithstanding any applications-related information or support that may be provided by TI. Buyer represents and agrees that it has all the necessary expertise to create and implement safeguards which anticipate dangerous consequences of failures, monitor failures and their consequences, lessen the likelihood of failures that might cause harm and take appropriate remedial actions. Buyer will fully indemnify TI and its representatives against any damages arising out of the use of any TI components in safety-critical applications.

In some cases, TI components may be promoted specifically to facilitate safety-related applications. With such components, TI’s goal is to help enable customers to design and create their own end-product solutions that meet applicable functional safety standards and requirements. Nonetheless, such components are subject to these terms.

No TI components are authorized for use in FDA Class III (or similar life-critical medical equipment) unless authorized officers of the parties have executed a special agreement specifically governing such use.

Only those TI components which TI has specifically designated as military grade or “enhanced plastic” are designed and intended for use in military/aerospace applications or environments. Buyer acknowledges and agrees that any military or aerospace use of TI components which have ***not*** been so designated is solely at the Buyer's risk, and that Buyer is solely responsible for compliance with all legal and regulatory requirements in connection with such use.

TI has specifically designated certain components as meeting ISO/TS16949 requirements, mainly for automotive use. In any case of use of non-designated products, TI will not be responsible for any failure to meet ISO/TS16949.

Products		**Applications**	
Audio	www.ti.com/audio	Automotive and Transportation	www.ti.com/automotive
Amplifiers	amplifier.ti.com	Communications and Telecom	www.ti.com/communications
Data Converters	dataconverter.ti.com	Computers and Peripherals	www.ti.com/computers
DLP® Products	www.dlp.com	Consumer Electronics	www.ti.com/consumer-apps
DSP	dsp.ti.com	Energy and Lighting	www.ti.com/energy
Clocks and Timers	www.ti.com/clocks	Industrial	www.ti.com/industrial
Interface	interface.ti.com	Medical	www.ti.com/medical
Logic	logic.ti.com	Security	www.ti.com/security
Power Mgmt	power.ti.com	Space, Avionics and Defense	www.ti.com/space-avionics-defense
Microcontrollers	microcontroller.ti.com	Video and Imaging	www.ti.com/video
RFID	www.ti-rfid.com		
OMAP Applications Processors	www.ti.com/omap	**TI E2E Community**	e2e.ti.com
Wireless Connectivity	www.ti.com/wirelessconnectivity		

Mailing Address: Texas Instruments, Post Office Box 655303, Dallas, Texas 75265
Copyright © 2016, Texas Instruments Incorporated