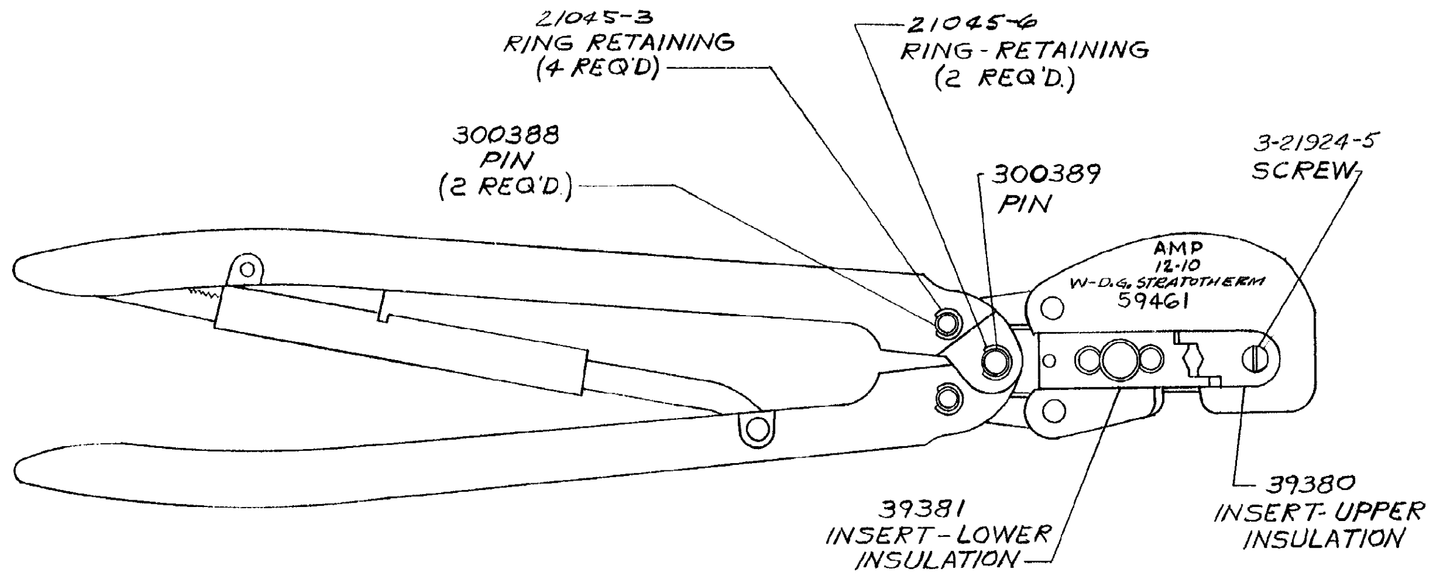

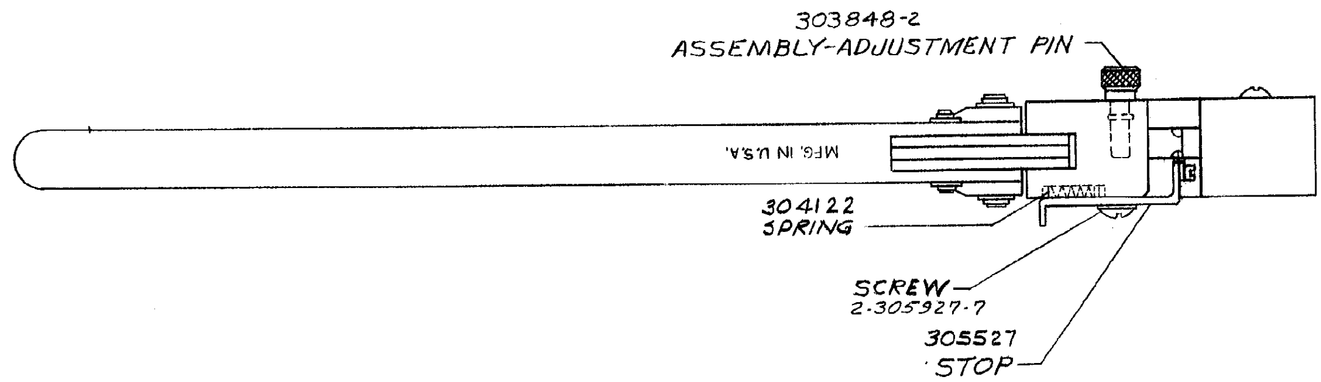

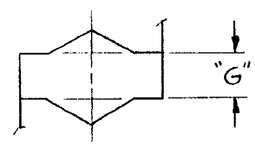

INSULATION CRIMP

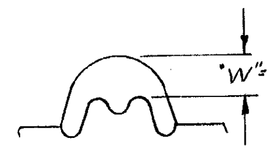

BARREL CRIMP

"G" DIM. WITH PIN AT	
#1 GO	#1 NO GO
.052	.072

"W" DIM.	
GO	NO GO
.091	.097

NOTE:
PLUG GAGE TOOL FROM SIDE OPPOSITE INSULATON INSERTS

NOTE:
"G" DIM. APPLIES AT CENTER OF "V" NOTCH AS INDICATED ON DRAWING.

NOTE:
TOOL SHOULD BE BOTTOMED, OR CLOSED, BEFORE PLUG GAGING.

NOTE:
FOR REPLACEMENT OF PARTS OTHER THAN SNAP RINGS & PINS, TOOL SHOULD BE RETURNED TO OUR FACTORY TO INSURE PROPER CERTI-CRIMP ADJUSTMENT.

PLUG GAGE DIMENSIONS APPLY WHEN TOOL IS BOTTOMED BUT NOT UNDER PRESSURE.

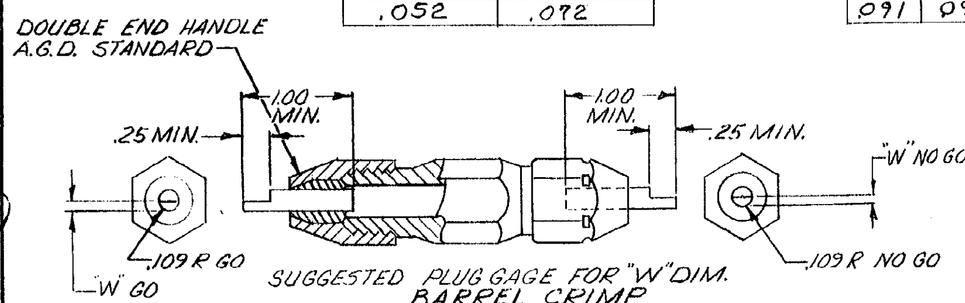

SUGGESTED PLUG GAGE FOR "W" DIM.
BARREL CRIMP

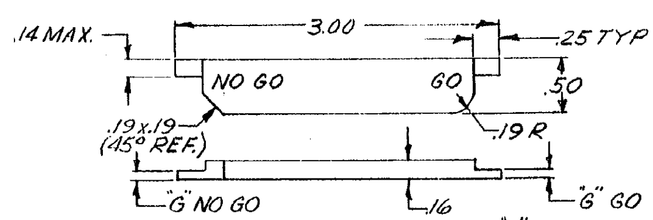

SUGGESTED PLUG GAGE FOR "G" DIM.
INSULATION CRIMP

USED ON 59461

STA.	NO.	ALT.
1		
2		
3		
4		
5		
6		
7		
8		
9		
10		
11		
12		
13		
14		
15		
16		
17		
18		
19		
20		
21		
22		
23	X	
24		
25		

MATERIAL:
HEAT TREAT:
FINISH: ✓ EXCEPT AS NOTED:

AMP 250

CUSTOMER COPY
REFERENCE ONLY

© 1959 BY AMP INCORPORATED
ALL RIGHTS RESERVED – AMP PRODUCTS COVERED BY PATENTS AND/OR PATENTS PENDING.

AMP INCORPORATED
HARRISBURG, PENNA.

HEAVY HEAD HAND TOOL ASSEMBLY

CLASS HIGH TEMP & HEAT RESISTANT
TYPE W-DIAMOND GRIP STRATOTHERM
SIZE 12-10

LOC.	SIZE	DR.	DATE	APPV'D	DATE	SCALE	CATALOG NUMBER	REV
M	C	R. VOLINSKIE	5-5-59			1:1	59461	J-2
		CKD. J.B. Fesler	5-1-59	J.B. Fesler	5-11-59			