ROHS

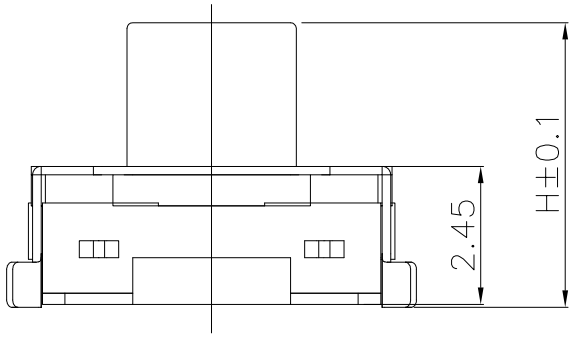

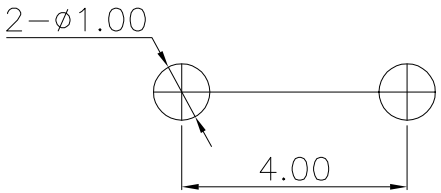

PCB Layout(Pattern Side)

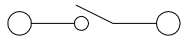

Circuit diagram

NO.1	
PART NO	H
A	3.5
C	5

NO.2	
PART NO	vigor
3	180±30
4	250±30
5	350±50

NO.3	
PART NO	MATERIAL/QTY
S	SUS/1PC

NO.4−NO.5	
PART NO	NOTE
01~99	SERIAL NUMBER

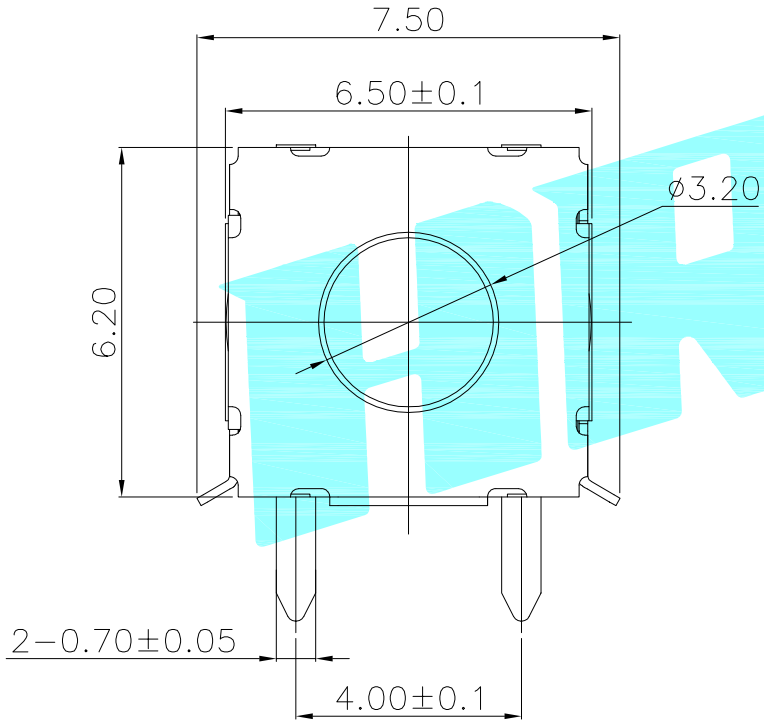

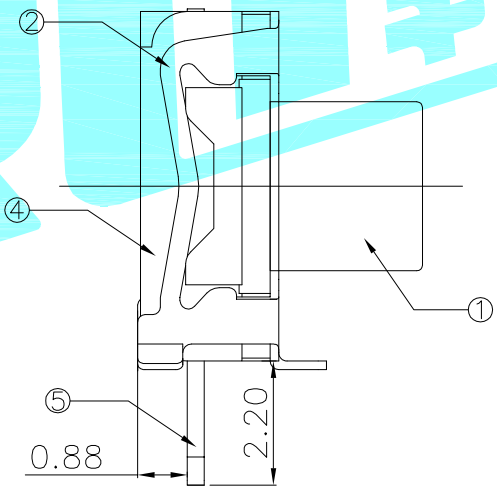

Typical Specifications :
1. Rating : DC 12V 50mA
2. Life:1,000,000 Cycles Min.

ITEM	PART NAME	TER'NO.	QTY.	MATERIAL	FINISHING	REMARK
⑤	Terminal	——	2	Brass(0.30t)	Plating silver	——
④	Base	——	1	PA6T	Black	——
③	Contact	——	1	F.Ag/SUS	——	——
②	Cover	——	1	SUS	——	——
①	Keystoke	——	1	RUBBER	Black	——

APPROVALS		DATE	HRO韩荣® ELECTRONICS CO.,LTD	
DRAWN	JKUN.LU	2018/8/1		
CHECKED			TITLE:	TACT SWITCHS
APPROVALS			PART NO.	K2−1157DW−□□SW-□□
TOLERANCES ARE	30~以上 ±0.30; 10~30 ±0.20; 5~10 ±0.15; ~ 5 ±0.10	ANGLE ±2°	UNIT: mm	SCALE: 1:1 / PROJ:
			DRAWING NO.	—— / SHEET 1 OF 1

ECN NO.	REV	DATE.	DESCRIPTION.	CHANGE.	CHECK.	APPRO.
——	A	——	NEW	——	——	——