Feature:

- High Isolation voltage between input and output (Viso = 5000V rms)
- Zero voltage crossing
- Operating Temperature up to 100 ºC
- Available in Tube or Tape and reel
- Available with standard DIP-6, Wide lead bend, and SMD lead bend options.
- Conventional black housing package

Schematic:

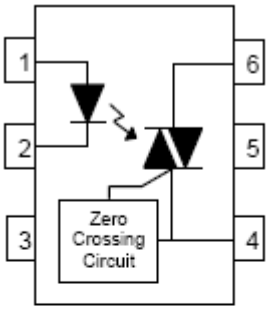

Pin Configuration
1. Anode
2. Cathode
3. No Connection
4. Terminal
5. Substrate (do not connect)
6. Terminal

Certification & Compliance:

- Pb free and RoHS Compliant
- UL recognized (File # E338132)
- VDE recognized (File # 40030457)

Dimension:

6-Pin Dip (standard):

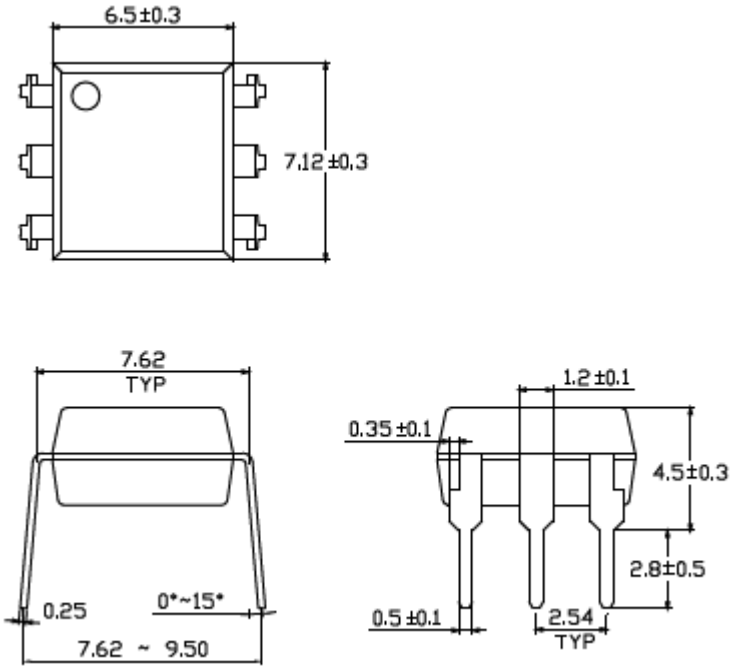

Wide lead bend (Option W):

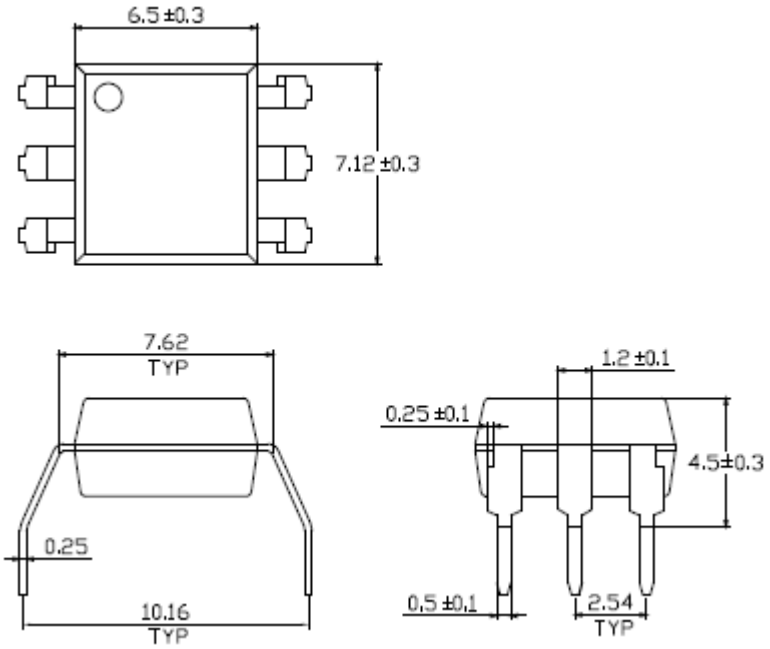

SMD lead bend (Option S):

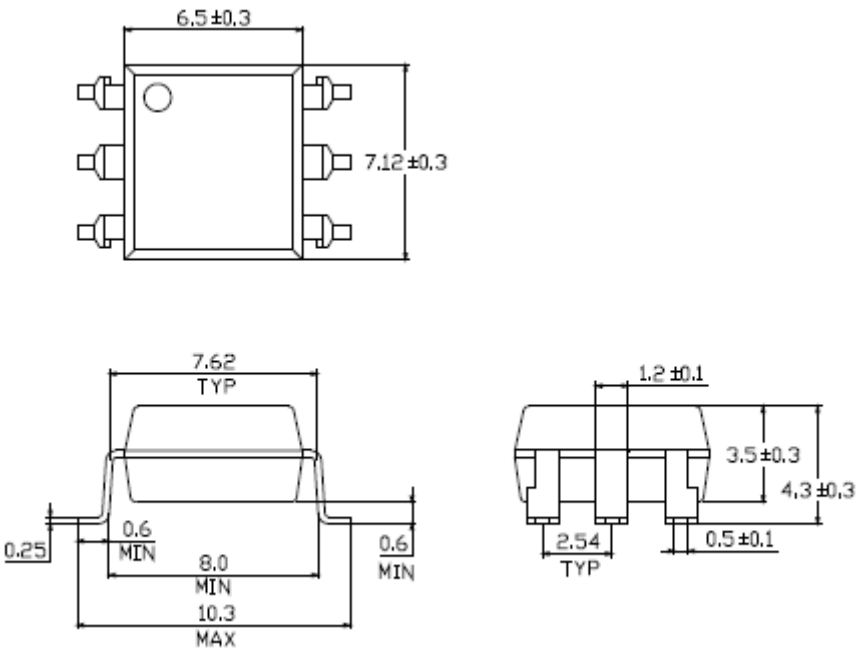

- All Dimensions are in mm
- Tolerance = +/- 0.1mm

Absolute Maximum Rating

Symbol	Parameter		Rating	Units
T_{STG}	Storage Temperature		-55 ~ 150	ºC
T_{OPR}	Operating Temperature		-55 ~ 100	ºC
T_{SOL}	Lead Solder Temperature		260 for 10 sec	ºC
P_{TOT}	Total Power Dissipation		250	mW
EMITTER				
I_F	Continuous Forward Current		60	mA
V_R	Reverse Voltage		6	V
P_D	Power Dissipation		100	mW
	Power Dissipation Derated above 25ºC		1.41	mW/ºC
DETECTOR				
P_D	Power Dissipation		150	mW
	Power Dissipation Derated above 25 ºC		1.76	mW/ºC
V_{DRM}	Off-state Output Terminal Voltage	Q303X series	250	V
		Q304X series	400	
		Q306X series	600	
		Q308X series	800	
I_{TSM}	Peak Repetitive Surge Current		1	A

Electrical Characteristic (T_A=25 °C)

Emitter

Symbol	Characteristic	Test Condition	Range			Unit
			Min	Typ	Max	
V_F	Forward Voltage	I_F = 30mA	-	-	1.5	V
I_R	Reverse Current	V_R = 6V	-	-	10	μA

Detector

Symbol	Characteristic	Device	Test Condition	Range			Unit
				Min	Typ	Max	
I_{DRM-1}	Peak Blocking Current	Q303X /Q304X series	V_{DRM} =Rated V_{DRM}, I_F =0mA	-	-	100	nA
		Q306X /Q308X series		-	-	500	
I_{DRM-2}	Leakage in inhibited state		I_F = Rated I_{FT}, V_{DRM} = Rated V_{DRM}, off state	-	-	500	μA
V_{TM}	Peak on-state voltage		I_{TM} = 100mA peak, I_F = Rated I_{FT}	-	-	3.0	V
dv/dt	Critical Rate of Rise off-state voltage	Q303X /Q304X /Q306X series	V_{PEAK} = Rated V_{DRM}, I_F = 0 (refer to test circuit for dv/dt)	1000	-	-	V/ μs
		Q308X series		600	-	-	
V_{INH}	Inhibit voltage		I_F = rated I_{FT}, MT1-MT2 voltage above which device will not trigger off-state	-	-	20	V

Transfer Characteristic:

Symbol	Characteristic	Device	Test Condition	Range			Unit
				Min	Typ	Max	
I_{FT}	LED Trigger Current	Q3031	Main terminal voltage = 3V	-	-	15	mA
		Q3041		-	-		
		Q3061		-	-		
		Q3081		-	-		
		Q3032		-	-	10	
		Q3042		-	-		
		Q3062		-	-		
		Q3082		-	-		
		Q3033		-	-	5	
		Q3043					
		Q3063					
		Q3083					
I_H	Holding Current			-	280	-	μA
V_{ISO}	Isolation voltage			5000	-	-	V

Characteristic Curves:

Figure 1. Forward Current vs Forward Voltage

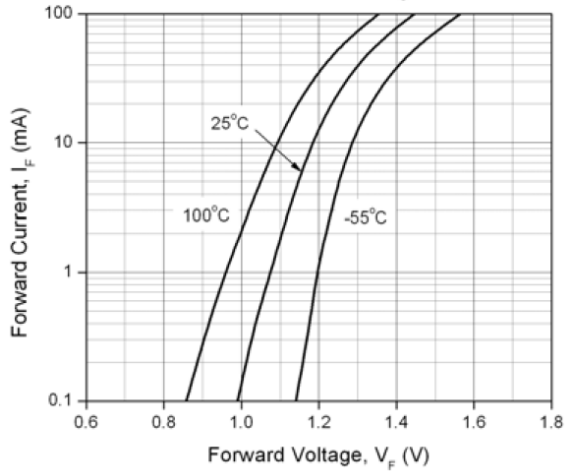

Figure 2. On-State Characteristics

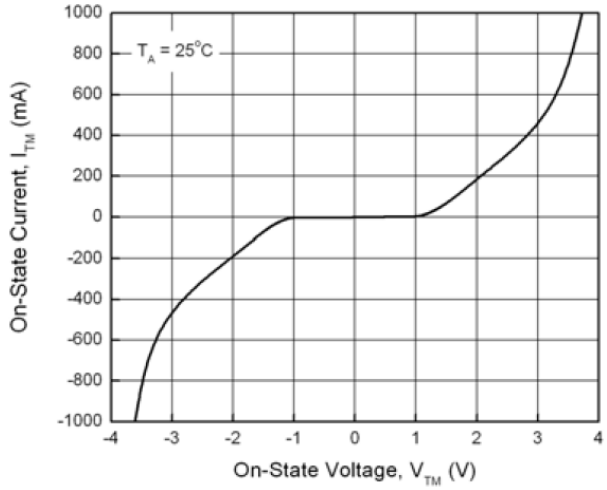

Figure 3. Holding Current vs. Ambient Temperature

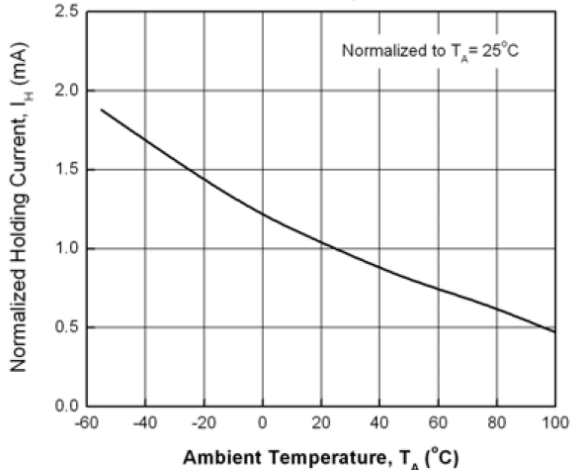

Figure 4. LED Current Required to Trigger vs. LED Pulse Width

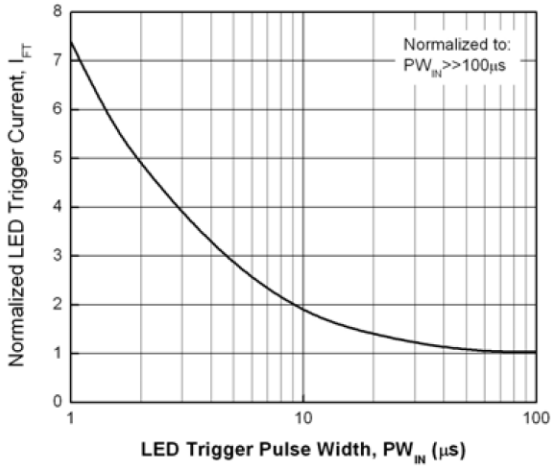

Figure 5. Leakage Current vs. Ambient Temperature

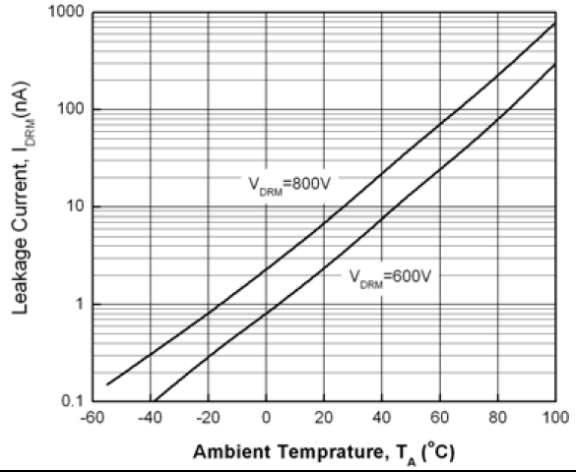

Figure 6. LED Trigger Current vs. Ambient Temperature

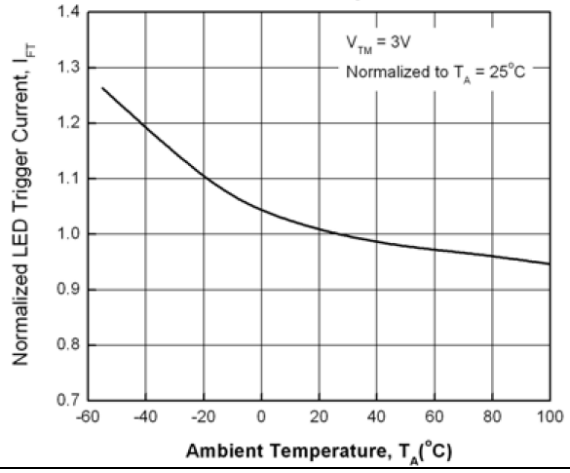

Figure 7. Off-State Output Terminal Voltage vs. Ambient Temperature

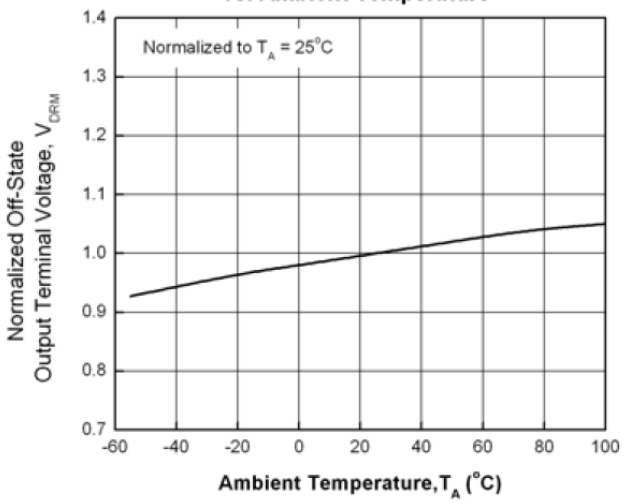

Figure 8. Leakage in Inhibit State vs. Ambient Temperature

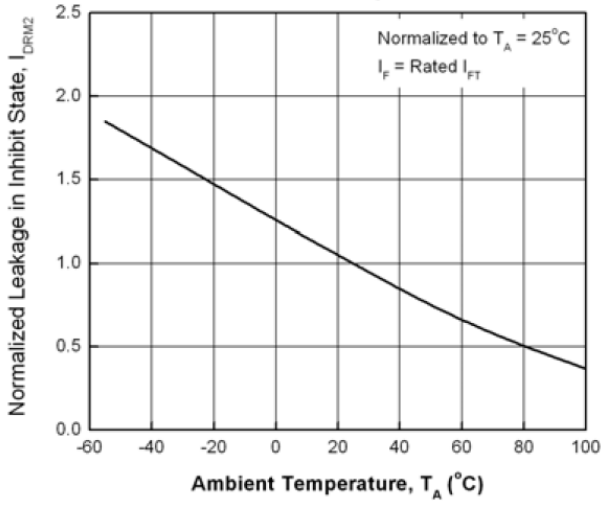

Figure 9. Inhibit Voltage vs. Ambient Temperature

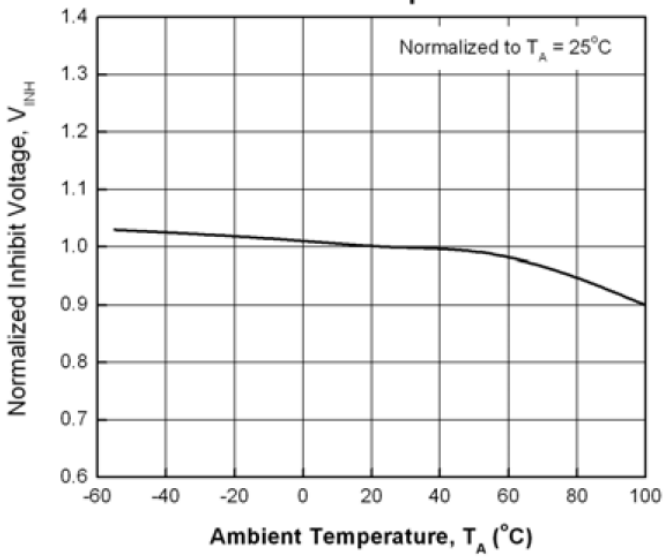

Test Circuit for static dv/dt:

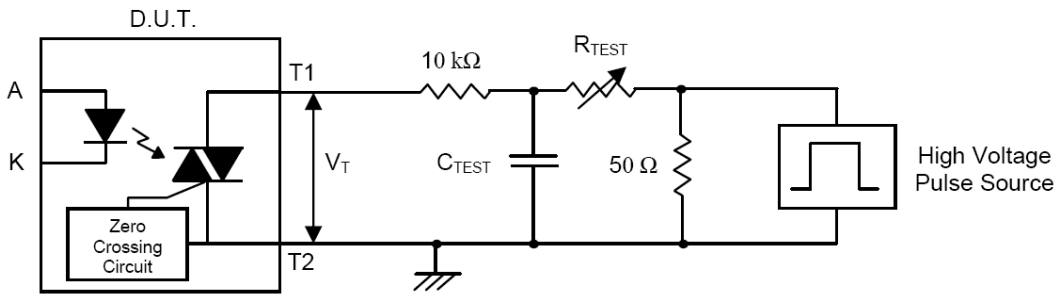

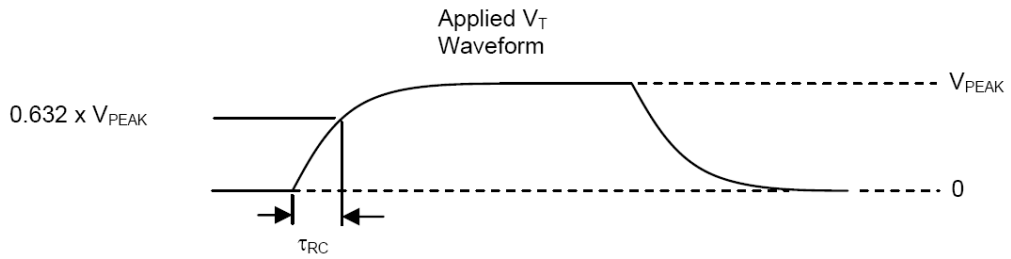

The high voltage pulse is set to the required V_{PEAK} value and applied to the D.U.T. output side through the RC circuit above. LED current is not applied. The waveform V_T is monitored using a x100 scope probe. By varying R_{TEST}, the dv/dt (slope) is increased, until the D.U.T. is observed to trigger (waveform collapses). The dv/dt is then decreased until the D.U.T. stops triggering. At this point, τ_{RC} is recorded and the dv/dt calculated.

$$dv/dt = \frac{0.632 \times V_{PEAK}}{\tau_{RC}}$$

Solder Profile & Footprint:

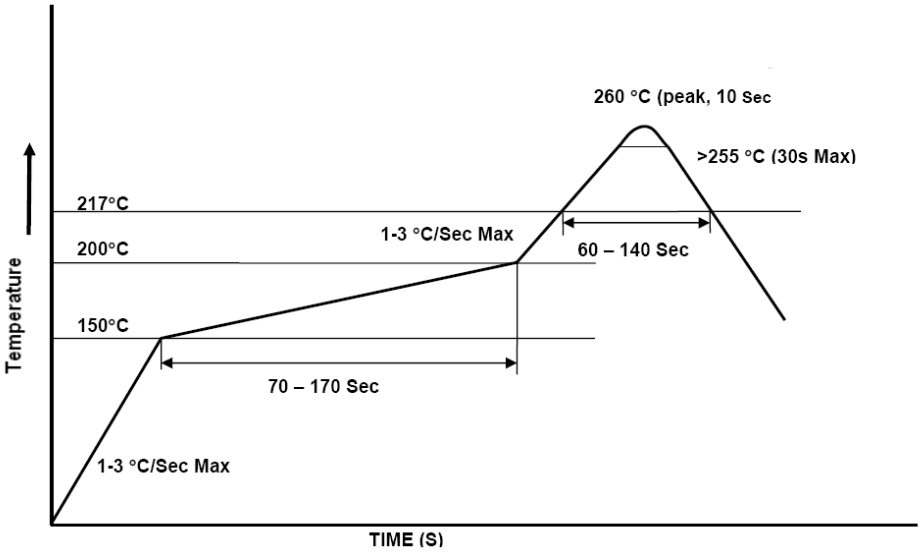

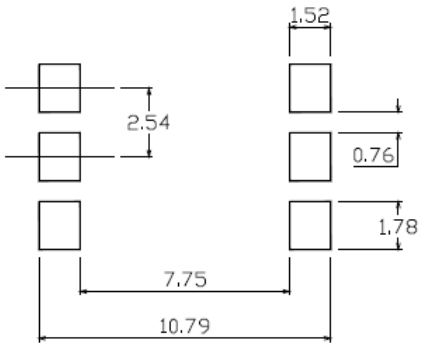

Recommended Solder Footprint for SMD Leadform

Units: mm	tolerance: +/- 0.1mm

Packing & Labeling:
Tape Dimension:

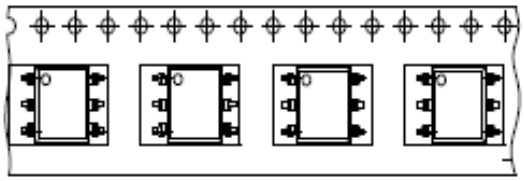

Direction of feed from reel

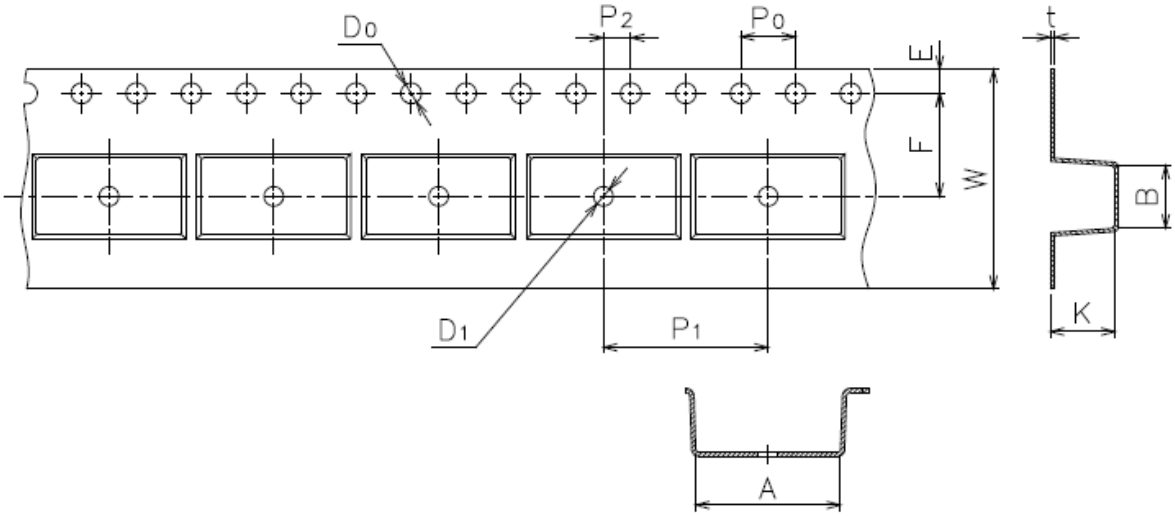

Dimension No.	A	B	Do	D1	E	F
Dimension (mm)	10.4±0.1	7.52±0.1	1.5+0.1/-0	1.5+0.1/-0	1.75±0.1	7.5±0.1

Dimension No.	Po	P1	P2	t	W	K
Dimension (mm)	4.0±0.15	1.6±0.1	2.0±0.1	0.35±0.03	16.0±0.2	4.5±0.1

Device Marking:

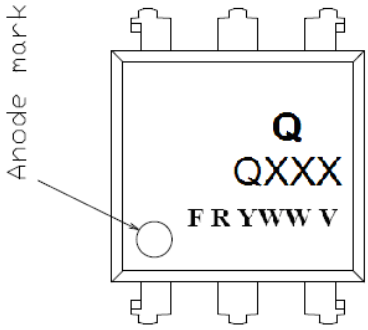

Q = QT-Brightek Corporation
QXXX = Device Part Number
F = Country of Origin
R = Binning Option
Y = Year
WW = Week
V = VDE Option

Ordering Information:

Part Number	Orderable Part Number	Options	Description	Quantity per packing
Q303X series	Q3031 / Q3032 / Q3033	None	Standard 6pin DIP	60pcs / Tube
	Q3031V / Q3032V / Q3033V	None	Standard 6 pin Dip + With VDE marking	60pcs / Tube
	Q3031W / Q3032W / Q3033W	W	Wide lead bend (0.4 inch spacing)	60pcs / Tube
	Q3031WV / Q3032WV / Q3033WV	W	Wide lead bend (0.4 inch spacing) + VDE marking	60pcs / Tube
	Q3031STA / Q3032STA / Q3033STA	S	SMD lead form with tape and reel option	1000pcs / reel
	Q3031STAV / Q3032STAV / Q3033STAV	S	SMD lead form with tape and reel option + VDE marking	1000pcs / reel
Q304X series	Q3041 / Q3042 / Q3043	None	Standard 6pin DIP	60pcs / Tube
	Q3041V / Q3042V / Q3043V	None	Standard 6 pin Dip + With VDE marking	60pcs / Tube
	Q3041W / Q3042W / Q3043W	W	Wide lead bend (0.4 inch spacing)	60pcs / Tube
	Q3041WV / Q3042WV / Q3043WV	W	Wide lead bend (0.4 inch spacing) + VDE marking	60pcs / Tube
	Q3041STA / Q3042STA / Q3043STA	S	SMD lead form with tape and reel option	1000pcs / reel
	Q3041STAV / Q3042STAV / Q3043STAV	S	SMD lead form with tape and reel option + VDE marking	1000pcs / reel
Q306X series	Q3061 / Q3062 / Q3063	None	Standard 6pin DIP	60pcs / Tube
	Q3061V / Q3062V / Q3063V	None	Standard 6 pin Dip + With VDE marking	60pcs / Tube
	Q3061W / Q3062W / Q3063W	W	Wide lead bend (0.4 inch spacing)	60pcs / Tube
	Q3061WV / Q3062WV / Q3063WV	W	Wide lead bend (0.4 inch spacing) + VDE marking	60pcs / Tube
	Q3061STA / Q3062STA / Q3063STA	S	SMD lead form with tape and reel option	1000pcs / reel
	Q3061STAV / Q3062STAV / Q3063STAV	S	SMD lead form with tape and reel option + VDE marking	1000pcs / reel

Q308X series	Q3081 / Q3082 / Q3083	None	Standard 6pin DIP	60pcs / Tube
	Q3081V / Q3082V / Q3083V	None	Standard 6 pin Dip + With VDE marking	60pcs / Tube
	Q3081W / Q3082W / Q3083W	W	Wide lead bend (0.4 inch spacing)	60pcs / Tube
	Q3081WV / Q3082WV / Q3083WV	W	Wide lead bend (0.4 inch spacing) + VDE marking	60pcs / Tube
	Q3081STA / Q3082STA / Q3083STA	S	SMD lead form with tape and reel option	1000pcs / reel
	Q3081STAV / Q3082STAV / Q3083STAV	S	SMD lead form with tape and reel option + VDE marking	1000pcs / reel

Revision History:

Description:	Revision #	Revision Date
Initial of Q303X/Q304X/Q306X/Q308X series	1.0	4/22/2010
Feature, certification & compliance and ordering information updates	1.1	02/01/2011

Disclaimer

QT-BRIGHTEK reserves the right to make changes without further notice to any products herein to improve reliability, function or design. QT-BRIGHTEK does not assume any liability arising out of the application or use of any product or circuit described herein; neither does it convey any license under its patent rights, nor the rights of others.

Life Support Policy

QT-BRIGHTEK's products are not authorized for use as critical components in life support devices or systems without the express written approval of QT-BRIGHTEK. As used herein:

1. Life support devices or systems are devices or systems which, (a) are intended for surgical implant into the body, or (b) support or sustain life, and (c) whose failure to perform when properly used in accordance with instructions for use provided in the labeling, can be reasonably expected to result in a significant injury of the user.

2. A critical component in any component of a life support device or system whose failure to perform can be reasonably expected to cause the failure of the life support device or system, or to affect its safety or effectiveness.