LM3475 Hysteretic PFET Buck Controller

Check for Samples: LM3475

FEATURES

- **Easy to Use Control Methodology**
- **0.8V to V_{IN} Adjustable Output Range**
- **High Efficiency (90% Typical)**
- **±0.9% (±1.5% Over Temp) Feedback Voltage**
- **100% Duty Cycle Capable**
- **Maximum Operating Frequency up to 2MHz**
- **Internal Soft-Start**
- **Enable Pin**
- **SOT-23-5 Package**

APPLICATIONS

- **TFT Monitor**
- **Auto PC**
- **Vehicle Security**
- **Navigation Systems**
- **Notebook Standby Supply**
- **Battery Powered Portable Applications**
- **Distributed Power Systems**

DESCRIPTION

The LM3475 is a hysteretic P-FET buck controller designed to support a wide range of high efficiency applications in a very small SOT-23-5 package. The hysteretic control scheme has several advantages, including simple system design with no external compensation, stable operation with a wide range of components, and extremely fast transient response. Hysteretic control also provides high efficiency operation, even at light loads. The PFET architecture allows for low component count as well as 100% duty cycle and ultra-low dropout operation.

Typical Application Circuit

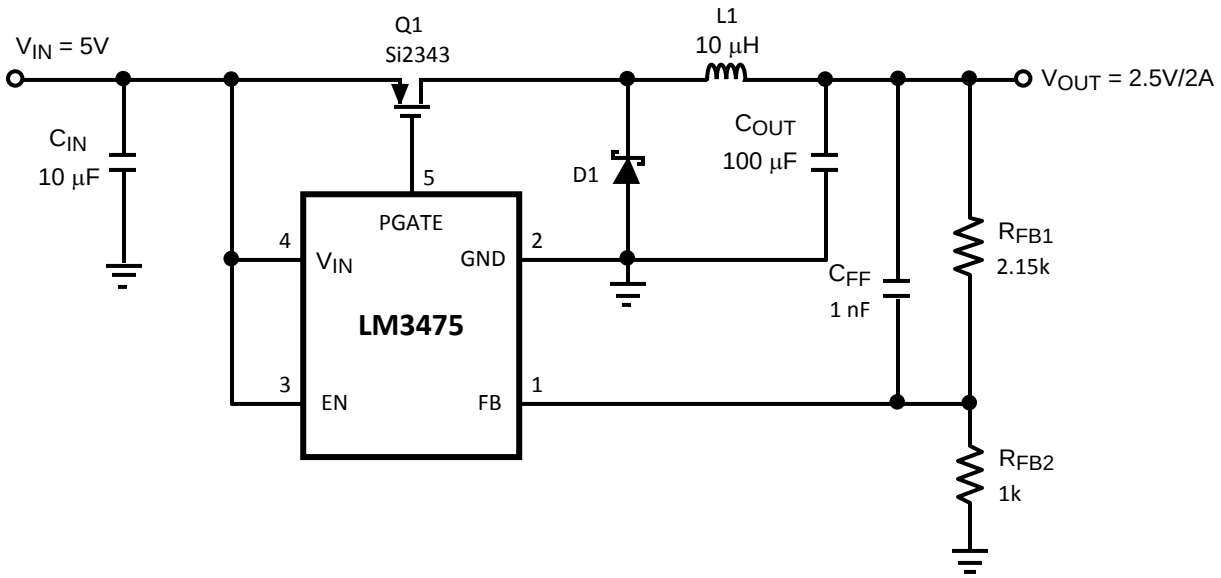

Please be aware that an important notice concerning availability, standard warranty, and use in critical applications of Texas Instruments semiconductor products and disclaimers thereto appears at the end of this data sheet.

All trademarks are the property of their respective owners.

PRODUCTION DATA information is current as of publication date. Products conform to specifications per the terms of the Texas Instruments standard warranty. Production processing does not necessarily include testing of all parameters.

Copyright © 2004–2005, Texas Instruments Incorporated

Connection Diagram

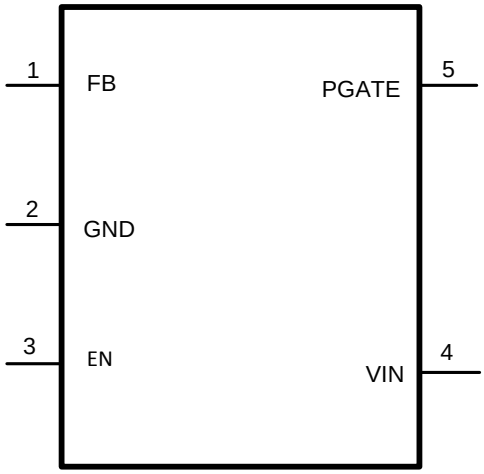

Figure 1. Top View
5 Lead Plastic SOT-23-5
See Package Number DBV0005A

PIN DESCRIPTION

Pin Name	Pin Number	Description
FB	1	Feedback input. Connect to a resistor divider between the output and GND.
GND	2	Ground.
EN	3	Enable. Pull this pin above 1.5V (typical) for normal operation. When EN is low, the device enters shutdown mode.
VIN	4	Power supply input.
PGATE	5	Gate drive output for the external PFET.

Copyright © 2004–2005, Texas Instruments Incorporated

These devices have limited built-in ESD protection. The leads should be shorted together or the device placed in conductive foam during storage or handling to prevent electrostatic damage to the MOS gates.

Absolute Maximum Ratings [1][2]

V_{IN}	−0.3V to 16V
PGATE	−0.3V to 16V
FB	−0.3V to 5V
EN	−0.3V to 16V
Storage Temperature	−65°C to 150°C
Power Dissipation [3]	440mW
ESD Susceptibilty Human Body Model [4]	2.5kV
Lead Temperature Vapor Phase (60 sec.) Infared (15 sec.)	 215°C 220°C

(1) Absolute maximum ratings are limits beyond which damage to the device may occur. Operating Ratings are conditions for which the device is intended to be functional, but device parameter specifications may not be guaranteed. For guaranteed specifications and test conditions, see the Electrical Characteristics.
(2) If Military/Aerospace specified devices are required, please contact the Texas Instruments Sales Office/ Distributors for availability and specifications.
(3) The maximum allowable power dissipation is a function of the maximum junction temperature, T_{J_MAX}, the junction-to-ambient thermal resistance, θ_{JA} and the ambient temperature, T_A. The maximum allowable power dissipation at any ambient temperature is calculated using:$P_{D_MAX} = (T_{J_MAX} - T_A)/\theta_{JA}$. The maximum power dissipation of 0.44W is determined using T_A = 25°C, θ_{JA} = 225°C/W, and T_{J_MAX} = 125°C.
(4) The human body model is a 100 pF capacitor discharged through a 1.5kΩ resistor into each pin.

Operating Ratings [1]

Supply Voltage	2.7V to 10V
Operating Junction Temperature	−40°C to +125°C

(1) Absolute maximum ratings are limits beyond which damage to the device may occur. Operating Ratings are conditions for which the device is intended to be functional, but device parameter specifications may not be guaranteed. For guaranteed specifications and test conditions, see the Electrical Characteristics.

Electrical Characteristics

Specifications in Standard type face are for T_J = 25°C, and in **bold type face** apply over the full **Operating Temperature Range** (T_J = −40°C to +125°C). Unless otherwise specified, V_{IN} = EN = 5.0V. Datasheet min/max specification limits are guaranteed by design, test, or statistical analysis.

Symbol	Parameter	Conditions	Min	Typ	Max	Unit
I_Q	Quiescent Current	EN = V_{IN} (PGATE Open)	**170**	260	**320**	µA
		EN = 0V	**4**	7	**10**	
V_{FB}	Feedback Voltage		**0.788**	0.8	**0.812**	V
$\%\Delta V_{FB}/\Delta V_{IN}$	Feedback Voltage Line Regulation	2.7V < V_{IN} < 10V		0.01		%/V
V_{HYST}	Comparator Hysteresis	2.7V < V_{IN} < 10V −40°C to +125°C		21 21	28 **32**	mV
I_{FB}	FB Bias Current			50	**600**	nA
Vth_{EN}	Enable Threshold Voltage	Increasing	**1.2**	1.5	**1.8**	V
	Hysteresis			365		mV
I_{EN}	Enable Leakage Current	EN = 10V		.025	**1**	µA
R_{PGATE}	Driver Resistance	Source I_{SOURCE} = 100mA		2.8		Ω
		Sink I_{Sink} = 100mA		1.8		

Copyright © 2004–2005, Texas Instruments Incorporated

Electrical Characteristics (continued)

Specifications in Standard type face are for T_J = 25°C, and in **bold type face** apply over the full **Operating Temperature Range** (T_J = −40°C to +125°C). Unless otherwise specified, V_{IN} = EN = 5.0V. Datasheet min/max specification limits are guaranteed by design, test, or statistical analysis.

Symbol	Parameter	Conditions	Min	Typ	Max	Unit
I_{PGATE}	Driver Output Current	Source V_{PGATE} = 3.5V C_{PGATE} = 1nF		0.475		A
		Sink V_{PGATE} = 3.5V C_{PGATE} = 1nF		1.0		
T_{SS}	Soft-Start Time	2.7V < V_{IN} < 10V (EN Rising)		4		ms
T_{ONMIN}	Minimum On-Time	PGATE Open		180		ns
V_{UVD}	Under Voltage Detection	Measured at the FB Pin	**0.487**	0.56	**0.613**	V

Copyright © 2004–2005, Texas Instruments Incorporated

Typical Performance Characteristics

Unless specified otherwise, all curves taken at V_{IN} = 5V, V_{OUT} = 2.5V, L = 10 µH, C_{OUT} = 100 µF, ESR = 100mΩ, and T_A = 25°C.

Quiescent Current vs Input Voltage

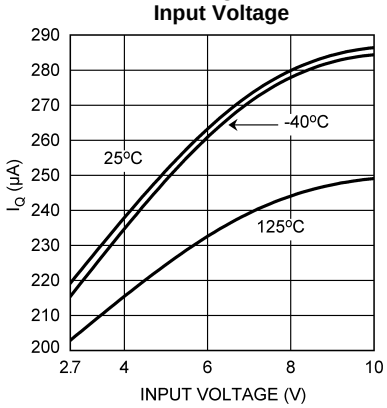

Figure 2.

Feedback Voltage vs Temperature

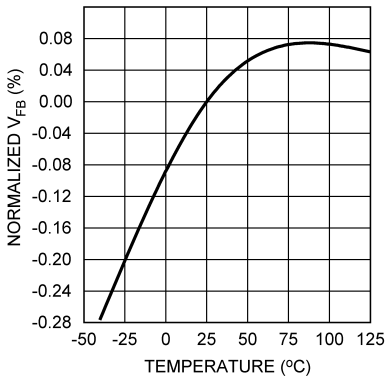

Figure 3.

Hysteresis Voltage vs Input Voltage

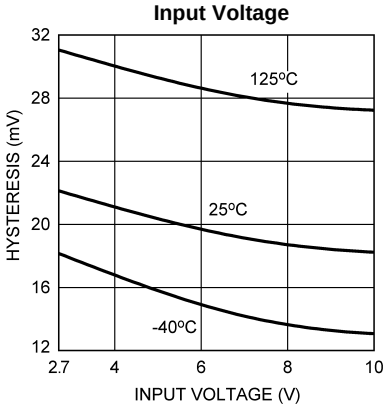

Figure 4.

Hysteresis Voltage vs Temperature

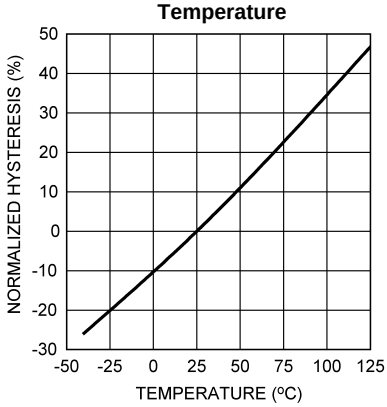

Figure 5.

Efficiency vs Load Current

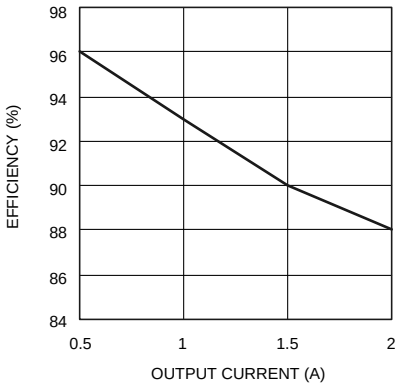

Figure 6.

Efficiency vs Input Voltage I_{OUT} = 2A

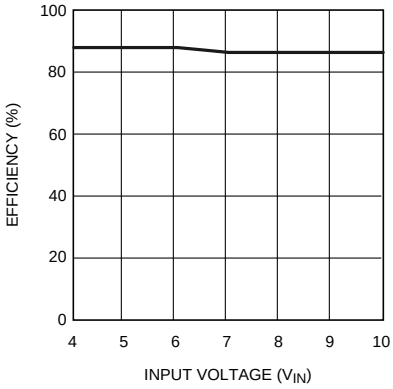

Figure 7.

Copyright © 2004–2005, Texas Instruments Incorporated

Typical Performance Characteristics (continued)

Unless specified otherwise, all curves taken at V_{IN} = 5V, V_{OUT} = 2.5V, L = 10 µH, C_{OUT} = 100 µF, ESR = 100mΩ, and T_A = 25°C.

Start Up

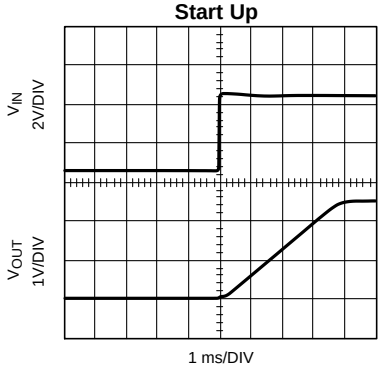

Figure 8.

Output Ripple Voltage

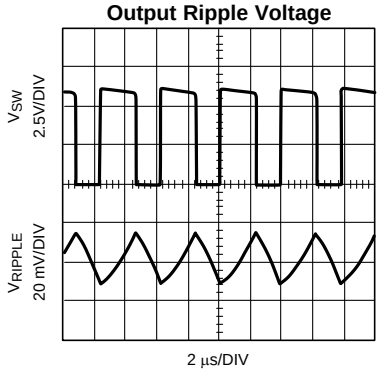

Figure 9.

Load Transient Response with External Ramp (Circuit from Figure 14)

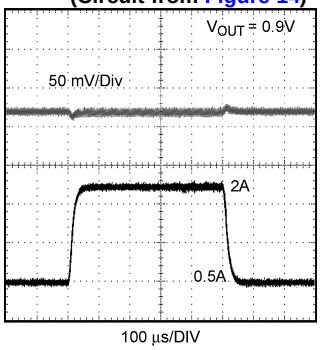

Figure 10.

Load Transient Response (Typical Application Circuit from Figure 16)

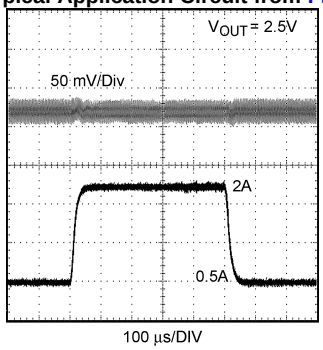

Figure 11.

Copyright © 2004–2005, Texas Instruments Incorporated

Block Diagram

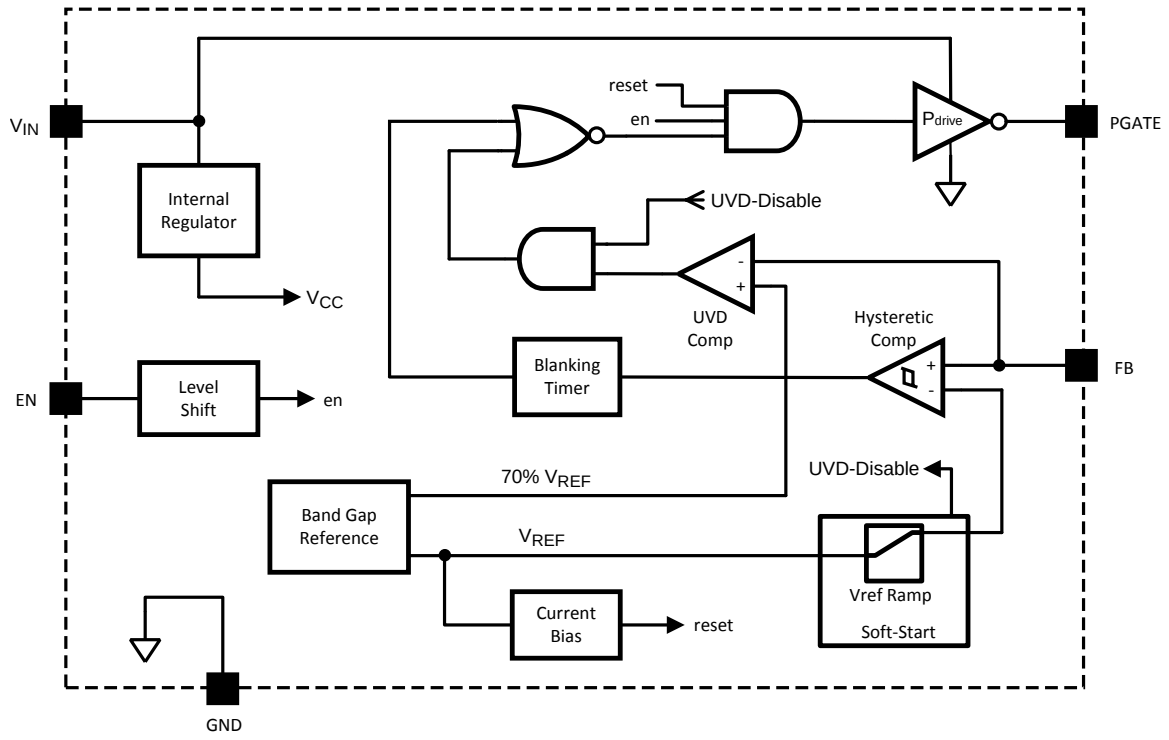

OPERATION DESCRIPTION

OVERVIEW

The LM3475 is a buck (step-down) DC-DC controller that uses a hysteretic control architecture, which results in Pulse Frequency Modulated (PFM) regulation. The hysteretic control scheme does not utilize an internal oscillator. Switching frequency depends on external components and operating conditions. Operating frequency decreases at light loads, resulting in excellent efficiency compared to PWM architectures. Because switching is directly controlled by the output conditions, hysteretic control provides exceptional load transient response.

HYSTERETIC CONTROL CIRCUIT

The LM3475 uses a comparator-based voltage control loop. The voltage on the feedback pin is compared to a 0.8V reference with 21mV of hysteresis. When the FB input to the comparator falls below the reference voltage, the output of the comparator goes low. This results in the driver output, PGATE, pulling the gate of the PFET low and turning on the PFET.

With the PFET on, the input supply charges C_{OUT} and supplies current to the load through the PFET and the inductor. Current through the inductor ramps up linearly, and the output voltage increases. As the FB voltage reaches the upper threshold (reference voltage plus hysteresis) the output of the comparator goes high, and the PGATE turns the PFET off. When the PFET turns off, the catch diode turns on, and the current through the inductor ramps down. As the output voltage falls below the reference voltage, the cycle repeats. The resulting output, inductor current, and switch node waveforms are shown in Figure 12.

Copyright © 2004–2005, Texas Instruments Incorporated

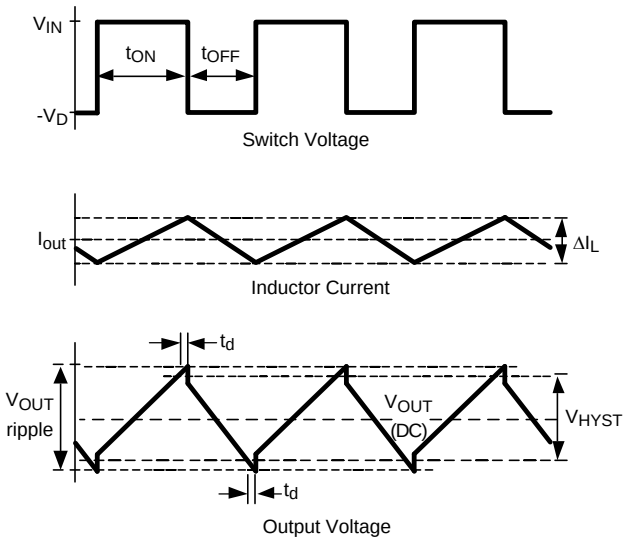

Figure 12. Hysteretic Waveforms

The LM3475 operates in discontinuous conduction mode at light load current and continuous conduction mode at heavy load current. In discontinuous conduction mode, current through the inductor starts at zero and ramps up to the peak, then ramps down to zero. The next cycle starts when the FB voltage reaches the reference voltage. Until then, the inductor current remains zero. Operating frequency is low, as are switching losses. In continuous conduction mode, current always flows through the inductor and never ramps down to zero.

SOFT-START

The LM3475 includes an internal soft-start function to protect components from excessive inrush current and output voltage overshoot. As V_{IN} rises above 2.7V (typical), the internal bias circuitry becomes active. When EN goes high, the device enters soft-start. During soft-start, the reference voltage is ramped up to the nominal value of 0.8V in approximately 4ms. Duty cycle and output voltage will increase as the reference voltage is ramped up.

UNDER VOLTAGE DETECTION

When the output voltage falls below 70% (typical) of the normal voltage, as measured at the FB pin, the device turns off PFET and restarts a new soft-start cycle. In short circuit, the PFET is always on, and the converter is effectively a resistor divider from input to output to ground. Whether the part restarts depends on the power path resistance and the short circuit resistance. This feature should not be considered as overcurrent protection or output short circuit protection.

PGATE

During switching, the PGATE pin swings from V_{IN} (off) to ground (on). As input voltage increases, the time it takes to slew the gate of the PFET on and off also increases. Also, as the PFET gate voltage approaches V_{IN}, the PGATE current driving capability decreases. This can cause a significant additional delay in turning the switch off when using a PFET with a low threshold voltage. These two effects will increase power dissipation and reduce efficiency. Therefore, a PFET with relatively high threshold voltage and low gate capacitance is recommended.

MINIMUM ON/OFF TIME

To ensure accurate comparator switching, the LM3475 imposes a blanking time after each comparator state change. This blanking time is 180ns typically. Immediately after the comparator goes high or low, it will be held in that state for the duration of the blanking time. This helps keep the hysteretic comparator from improperly responding to switching noise spikes (See REDUCING SWITCHING NOISE) and ESL spikes (See OUTPUT CAPACITOR SELECTION) at the output.

 Copyright © 2004–2005, Texas Instruments Incorporated

At very low or very high duty cycle operation, maximum frequency will be limited by the blanking time. The maximum operating frequency can be determined by the following equations:

$F_{MAX} = D / ton_{min}$ (1)

$F_{MAX} = (1-D) / toff_{min}$

where

- D is the duty cycle, defined as V_{OUT}/V_{IN}, and ton_{min}
- $toff_{min}$ is the sum of the blanking time, the propagation delay time, and the PFET delay time (see Figure 12) (2)

ENABLE PIN (EN)

The LM3475 provides a shutdown function via the EN pin to disable the device. The device is active when the EN pin is pulled above 1.5V (typ) and in shutdown mode when EN is below 1.135V (typ). In shutdown mode, total quiescent current is less than 10µA. The EN pin can be directly connected to V_{IN} for always-on operation.

Design Information

SETTING OUTPUT VOLTAGE

The output voltage is programmed using a resistor divider between V_{OUT} and GND as shown in Figure 13. The feedback resistors can be calculated as follows:

$$V_{OUT} = \frac{R_1 + R_2}{R_2} \times V_{FB}$$

where

- Vfb is 0.8V typically (3)

The feedback resistor ratio, α = (R1+R2) / R2, will also be used below to calculate output ripple and operating frequency.

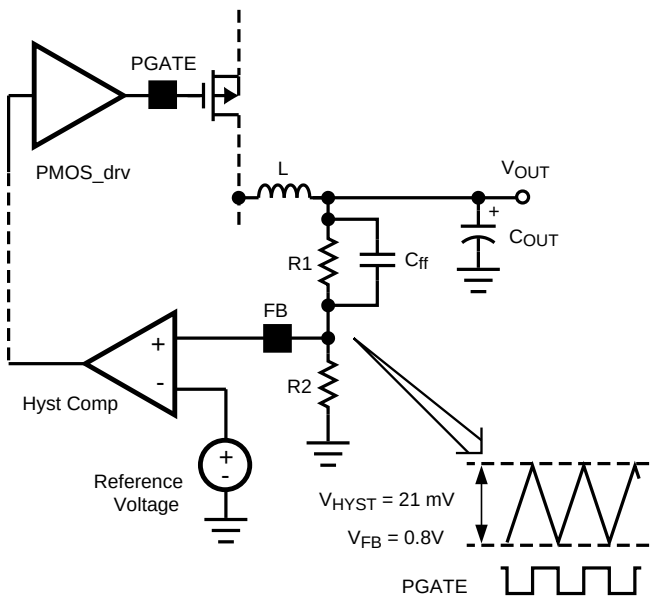

Figure 13. Hysteretic Window

SETTING OPERATING FREQUENCY AND OUTPUT RIPPLE

Although hysteretic control is a simple control scheme, the operating frequency and other performance characteristics depend on external conditions and components. If the inductance, output capacitance, ESR, V_{IN}, or C_{ff} is changed, there will be a change in the operating frequency and possibly output ripple. Therefore, care must be taken to select components which will provide the desired operating range. The best approach is to determine what operating frequency is desirable in the application and then begin with the selection of the inductor and output capacitor ESR. The design process usually involves a few iterations to select appropriate standard values that will result in the desired frequency and ripple.

Without the feedforward capacitor (C_{ff}), the operating frequency (F) can be approximately calculated using the formula:

$$F = \frac{V_{OUT}}{V_{IN}} \times \frac{(V_{IN} - V_{OUT}) \times ESR}{(V_{HYST} \times \alpha \times L) + (V_{IN} \times delay \times ESR)}$$

where

- Delay is the sum of the LM3475 propagation delay time and the PFET delay time
- The propagation delay is 90ns typically (4)

Minimum output ripple voltage can be determined using the following equation:

$$V_{OUT_PP} = V_{HYST} (R1 + R2) / R2 \quad (5)$$

USING A FEED-FORWARD CAPACITOR

The operating frequency and output ripple voltage can also be significantly influenced using a speed up capacitor, C_{ff}, as shown in Figure 13. C_{ff} is connected in parallel with the high side feedback resistor, R1. The output ripple causes a current to be sourced or sunk through this capacitor. This current is essentially a square wave. Since the input to the feedback pin (FB) is a high impedance node, the bulk of the current flows through R2. This superimposes a square wave ripple voltage on the FB node. The end result is a reduction in output ripple and an increase in operating frequency. When adding C_{ff}, calculate the formula above with α= 1. The value of C_{ff} depends on the desired operating frequency and the value of R2. A good starting point is 1nF ceramic at 100kHz decreasing linearly with increased operating frequency. Also note that as the output voltage is programmed below 1.6V, the effect of C_{ff} will decrease significantly.

INDUCTOR SELECTION

The most important parameters for the inductor are the inductance and the current rating. The LM3475 operates over a wide frequency range and can use a wide range of inductance values. Minimum inductance can be calculated using the following equation:

$$L = \frac{V_{IN} - V_{SD} - V_{OUT}}{\Delta I} \times \frac{D}{F}$$

where

- D is the duty cycle, defined as V_{OUT}/V_{IN}
- ΔI is the allowable inductor ripple current (6)

Maximum allowable inductor ripple current should be calculated as a function of output current (I_{OUT}) as shown below:

$$\Delta I_{max} = I_{OUT} \times 0.3$$

The inductor must also be rated to handle the peak current (I_{PK}) and RMS current given by:

$$I_{PK} = (I_{OUT} + \Delta I/2) \times 1.1 \quad (7)$$

$$I_{RMS} = \sqrt{I_{OUT}^2 + \frac{\Delta I^2}{3}} \quad (8)$$

The inductance value and the resulting ripple is one of the key parameters controlling operating frequency.

Copyright © 2004–2005, Texas Instruments Incorporated

OUTPUT CAPACITOR SELECTION

Once the desired operating frequency and inductance value are selected, ESR must be selected based on Equation 4. This process may involve a few iterations to select standard ESR and inductance values.

In general, the ESR of the output capacitor and the inductor ripple current create the output ripple of the regulator. However, the comparator hysteresis sets the first order value of this ripple. Therefore, as ESR and ripple current vary, operating frequency must also vary to keep the output ripple voltage regulated. The hysteretic control topology is well suited to using ceramic output capacitors. However, ceramic capacitors have a very low ESR, resulting in a 90° phase shift of the output voltage ripple. This results in low operating frequency and increased output ripple. To fix this problem a low value resistor could be added in series with the ceramic output capacitor. Although counter intuitive, this combination of a ceramic capacitor and external series resistance provide highly accurate control over the output voltage ripple. Another method is to add an external ramp at the FB pin as shown in Figure 14. By proper selection of R1 and C2, the FB pin sees faster voltage change than the output ripple can cause. As a result, the switching frequency is higher while the output ripple becomes lower. The switching frequency is approximately:

$$F = \frac{V_{IN}}{2\pi \times R_1 \times C_2 \times V_{HYS}} \tag{9}$$

Other types of capacitor, such as Sanyo POSCAP, OS-CON, and Nichicon 'NA' series are also recommended and may be used without additional series resistance. For all practical purposes, any type of output capacitor may be used with proper circuit verification.

Capacitors with high ESL (equivalent series inductance) values should not be used. As shown in Figure 12, the output ripple voltage contains a small step at both the high and low peaks. This step is caused by and is directly proportional to the output capacitor's ESL. A large ESL, such as in an electrolytic capacitor, can create a step large enough to cause abnormal switching behavior.

INPUT CAPACITOR SELECTION

A bypass capacitor is required between V_{IN} and ground. It must be placed near the source of the external PFET. The input capacitor prevents large voltage transients at the input and provides the instantaneous current when the PFET turns on. The important parameters for the input capacitor are the voltage rating and the RMS current rating. Follow the manufacturer's recommended voltage de-rating. RMS current and power dissipation (PD) can be calculated with the equations below:

$$I_{RMS_CIN} = \frac{I_{OUT}}{V_{IN}} \sqrt{V_{OUT} \times (V_{IN} - V_{OUT})} \tag{10}$$

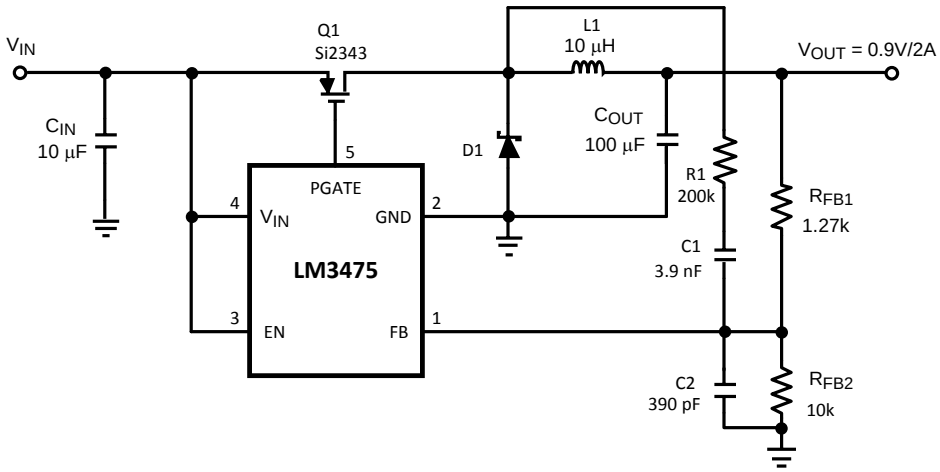

Figure 14. External Ramp

DIODE SELECTION

The catch diode provides the current path to the load during the PFET off time. Therefore, the current rating of the diode must be higher than the average current through the diode, which be calculated as shown:

$$I_{D_AVE} = I_{OUT} \times (1 - D) \quad (11)$$

The peak voltage across the catch diode is approximately equal to the input voltage. Therefore, the diode's peak reverse voltage rating should be greater than 1.3 times the input voltage.

A Schottky diode is recommended, since a low forward voltage drop will improve efficiency.

For high temperature applications, diode leakage current may become significant and require a higher reverse voltage rating to achieve acceptable performance.

P-CHANNEL MOSFET SELECTION

The PFET switch should be selected based on the maximum Drain-Source voltage (VDS), Drain current rating (I_D), maximum Gate-Source voltage (VGS), on resistance (R_{DSON}), and Gate capacitance. The voltage across the PFET when it is turned off is equal to the sum of the input voltage and the diode forward voltage. The VDS must be selected to provide some margin beyond the sum of the input voltage and Vd.

Since the current flowing through the PFET is equal to the current through the inductor, I_D must be rated higher than the maximum I_{PK}. During switching, PGATE swings the PFET's gate from V_{IN} to ground. Therefore, A PFET must be selected with a maximum VGS larger than V_{IN}. To insure that the PFET turns on completely and quickly, refer to the PGATE section.

The power loss in the PFET consists of switching losses and conducting losses. Although switching losses are difficult to precisely calculate, the equation below can be used to estimate total power dissipation. Increasing R_{DSON} will increase power losses and degrade efficiency. Note that switching losses will also increase with lower gate threshold voltages.

$$PD_{switch} = R_{DSON} \times (I_{OUT})^2 \times D + F \times I_{OUT} \times V_{IN} \times (t_{on} + t_{off})/2$$

where

- t_{on} = FET turn on time
- t_{off} = FET turn off time
- A value of 10ns to 50ns is typical for ton and toff (12)

Note that the R_{DSON} has a positive temperature coefficient. At 100°C, the R_{DSON} may be as much as 150% higher than the value at 25°C.

The Gate capacitance of the PFET has a direct impact on both PFET transition time and the power dissipation in the LM3475. Most of the power dissipated in the LM3475 is used to drive the PFET switch. This power can be calculated as follows:

The amount of average gate driver current required during switching (I_G) is:

$$I_G = Q_g \times F \quad (13)$$

And the total power dissipated in the device is:

$$I_q V_{IN} + I_G V_{IN}$$

where

- I_q is typically 260µA as shown in Electrical Characteristics (14)

As gate capacitance increases, operating frequency may need to be reduced, or additional heat sinking may be required to lower the power dissipation in the device.

In general, keeping the gate capacitance below 2000pF is recommended to keep transition times (switching losses), and power losses low.

REDUCING SWITCHING NOISE

Although the LM3475 employs internal noise suppression circuitry, external noise may continue to be excessive. There are several methods available to reduce noise and EMI.

Copyright © 2004–2005, Texas Instruments Incorporated

MOSFETs are very fast switching devices. The fast increase in PFET current coupled with parasitic trace inductance can create unwanted noise spikes at both the switch node and at V_{IN}. Switching noise will increase with load current and input voltage. This noise can also propagate through the ground plane, sometimes causing unpredictable device performance. Slowing the rise and fall times of the PFET can be very effective in reducing this noise. Referring to Figure 15, the PFET can be slowed down by placing a small (1Ω-10Ω) resistor in series with PGATE. However, this resistor will increase the switching losses in the PFET and will lower efficiency. Therefore it should be kept as small as possible and only used when necessary. Another method to reduce switching noise (other than good PCB layout, see Layout) is to use a small RC filter or snubber. The snubber should be placed in parallel with the catch diode, connected close to the drain of the PFET, as shown in Figure 15. Again, the snubber should be kept as small as possible to limit its impact on system efficiency. A typical range is a 10Ω-100Ω resistor and a 470pF to 2.2nF ceramic capacitor.

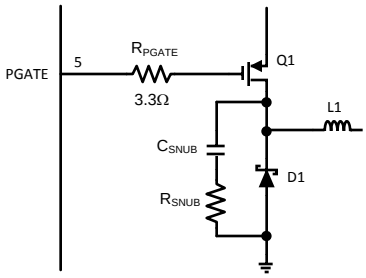

Figure 15. PGATE Resistor and Snubber

Layout

PC board layout is very important in all switching regulator designs. Poor layout can cause EMI problems, excess switching noise and poor operation.

As shown in Figure 17 and Figure 18, place the ground of the input capacitor as close as possible to the anode of the diode. This path also carries a large AC current. The switch node, the node connecting the diode cathode, inductor, and PFET drain, should be kept as small as possible. This node is one of the main sources for radiated EMI.

The feedback pin is a high impedance node and is therefore sensitive to noise. Be sure to keep all feedback traces away from the inductor and the switch node, which are sources of noise. Also, the resistor divider should be placed close to the FB pin. The gate pin of the external PFET should be located close to the PGATE pin.

Using a large, continuous ground plane is also recommended, particularly in higher current applications.

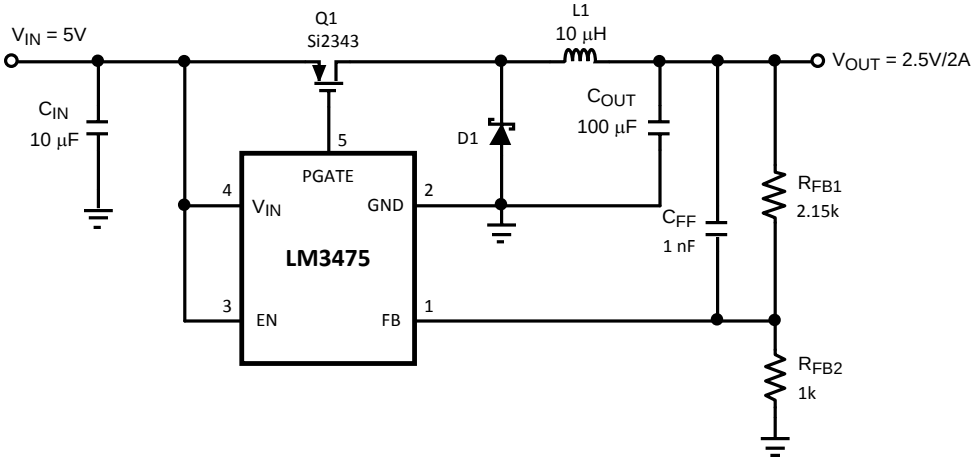

Figure 16.

Table 1. Bill of Materials

Designator	Description	Part Number	Vendor
C_{IN}	10µF, 16V, X5R	EMK325BJ106MN	TAIYO YUDEN
C_{OUT}	100µF, 6V, Ta	TPSY107M006R0100	AVX
C_{FF}	1nF, 25V, X7R	VJ1206Y102KXXA	Vishay
D1	Schottky, 20V, 2A	CMSH2-20L	Central Semiconductor
L1	10µH, 3.1A	CDRH103R100	Sumida
Q1	30V, 2.5A	Si2343	Vishay
R_{FB2}	1kΩ, 0805, 1%	CRW08051001F	Vishay
R_{FB1}	2.15kΩ, 0805, 1%	CRCW08052151F	Vishay

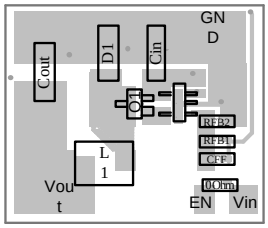

Figure 17. Top Layer (Standard Board)
(2:1 Scale)

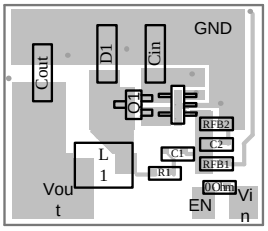

Figure 18. Top Layer (with External Ramp)
(2:1 Scale)

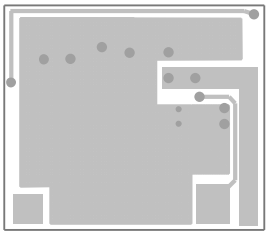

Figure 19. Bottom Layer
(2:1 Scale)

Copyright © 2004–2005, Texas Instruments Incorporated

PACKAGING INFORMATION

Orderable Device	Status (1)	Package Type	Package Drawing	Pins	Package Qty	Eco Plan (2)	Lead/Ball Finish	MSL Peak Temp (3)	Op Temp (°C)	Top-Side Markings (4)	Samples
LM3475MF	ACTIVE	SOT-23	DBV	5	1000	TBD	Call TI	Call TI	-40 to 125	S65B	Samples
LM3475MF/NOPB	ACTIVE	SOT-23	DBV	5	1000	Green (RoHS & no Sb/Br)	CU SN	Level-1-260C-UNLIM	-40 to 125	S65B	Samples
LM3475MFX	ACTIVE	SOT-23	DBV	5	3000	TBD	Call TI	Call TI	-40 to 125	S65B	Samples
LM3475MFX/NOPB	ACTIVE	SOT-23	DBV	5	3000	Green (RoHS & no Sb/Br)	CU SN	Level-1-260C-UNLIM	-40 to 125	S65B	Samples

(1) The marketing status values are defined as follows:
ACTIVE: Product device recommended for new designs.
LIFEBUY: TI has announced that the device will be discontinued, and a lifetime-buy period is in effect.
NRND: Not recommended for new designs. Device is in production to support existing customers, but TI does not recommend using this part in a new design.
PREVIEW: Device has been announced but is not in production. Samples may or may not be available.
OBSOLETE: TI has discontinued the production of the device.

(2) Eco Plan - The planned eco-friendly classification: Pb-Free (RoHS), Pb-Free (RoHS Exempt), or Green (RoHS & no Sb/Br) - please check http://www.ti.com/productcontent for the latest availability information and additional product content details.
TBD: The Pb-Free/Green conversion plan has not been defined.
Pb-Free (RoHS): TI's terms "Lead-Free" or "Pb-Free" mean semiconductor products that are compatible with the current RoHS requirements for all 6 substances, including the requirement that lead not exceed 0.1% by weight in homogeneous materials. Where designed to be soldered at high temperatures, TI Pb-Free products are suitable for use in specified lead-free processes.
Pb-Free (RoHS Exempt): This component has a RoHS exemption for either 1) lead-based flip-chip solder bumps used between the die and package, or 2) lead-based die adhesive used between the die and leadframe. The component is otherwise considered Pb-Free (RoHS compatible) as defined above.
Green (RoHS & no Sb/Br): TI defines "Green" to mean Pb-Free (RoHS compatible), and free of Bromine (Br) and Antimony (Sb) based flame retardants (Br or Sb do not exceed 0.1% by weight in homogeneous material)

(3) MSL, Peak Temp. -- The Moisture Sensitivity Level rating according to the JEDEC industry standard classifications, and peak solder temperature.

(4) Only one of markings shown within the brackets will appear on the physical device.

Important Information and Disclaimer: The information provided on this page represents TI's knowledge and belief as of the date that it is provided. TI bases its knowledge and belief on information provided by third parties, and makes no representation or warranty as to the accuracy of such information. Efforts are underway to better integrate information from third parties. TI has taken and continues to take reasonable steps to provide representative and accurate information but may not have conducted destructive testing or chemical analysis on incoming materials and chemicals. TI and TI suppliers consider certain information to be proprietary, and thus CAS numbers and other limited information may not be available for release.

In no event shall TI's liability arising out of such information exceed the total purchase price of the TI part(s) at issue in this document sold by TI to Customer on an annual basis.

TAPE AND REEL INFORMATION

REEL DIMENSIONS

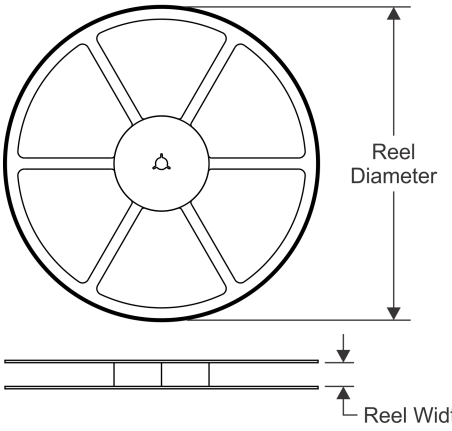

TAPE DIMENSIONS

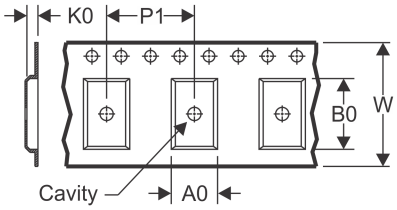

A0	Dimension designed to accommodate the component width
B0	Dimension designed to accommodate the component length
K0	Dimension designed to accommodate the component thickness
W	Overall width of the carrier tape
P1	Pitch between successive cavity centers

QUADRANT ASSIGNMENTS FOR PIN 1 ORIENTATION IN TAPE

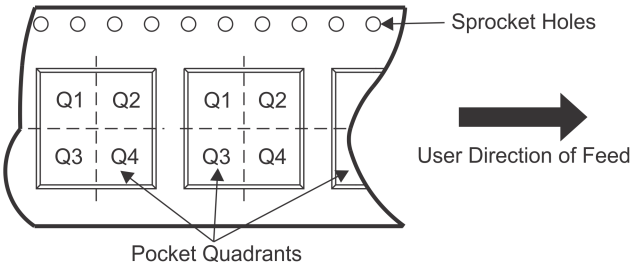

*All dimensions are nominal

Device	Package Type	Package Drawing	Pins	SPQ	Reel Diameter (mm)	Reel Width W1 (mm)	A0 (mm)	B0 (mm)	K0 (mm)	P1 (mm)	W (mm)	Pin1 Quadrant
LM3475MF	SOT-23	DBV	5	1000	178.0	8.4	3.2	3.2	1.4	4.0	8.0	Q3
LM3475MF/NOPB	SOT-23	DBV	5	1000	178.0	8.4	3.2	3.2	1.4	4.0	8.0	Q3
LM3475MFX	SOT-23	DBV	5	3000	178.0	8.4	3.2	3.2	1.4	4.0	8.0	Q3
LM3475MFX/NOPB	SOT-23	DBV	5	3000	178.0	8.4	3.2	3.2	1.4	4.0	8.0	Q3

TAPE AND REEL BOX DIMENSIONS

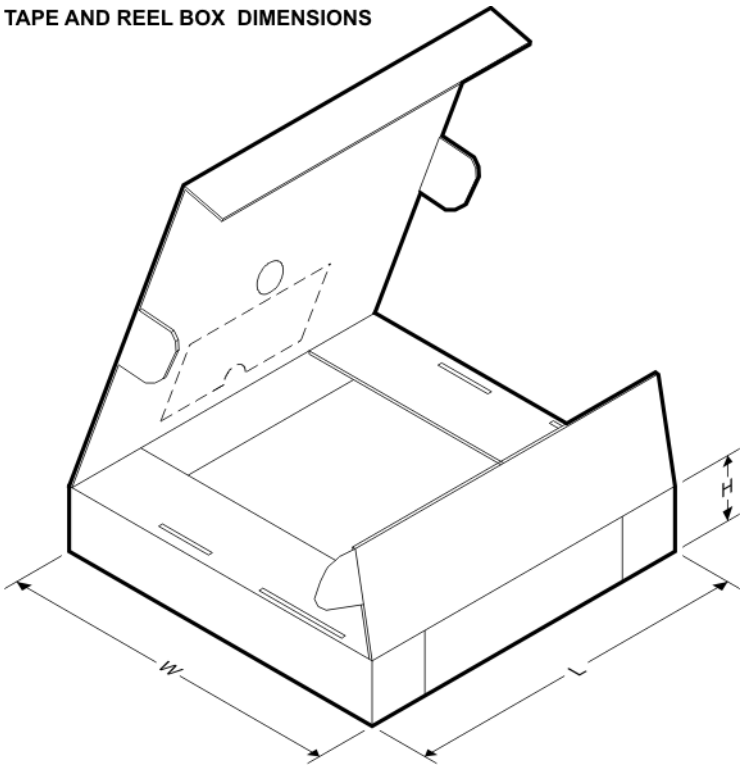

*All dimensions are nominal

Device	Package Type	Package Drawing	Pins	SPQ	Length (mm)	Width (mm)	Height (mm)
LM3475MF	SOT-23	DBV	5	1000	203.0	190.0	41.0
LM3475MF/NOPB	SOT-23	DBV	5	1000	203.0	190.0	41.0
LM3475MFX	SOT-23	DBV	5	3000	206.0	191.0	90.0
LM3475MFX/NOPB	SOT-23	DBV	5	3000	206.0	191.0	90.0

DBV (R–PDSO–G5) PLASTIC SMALL–OUTLINE PACKAGE

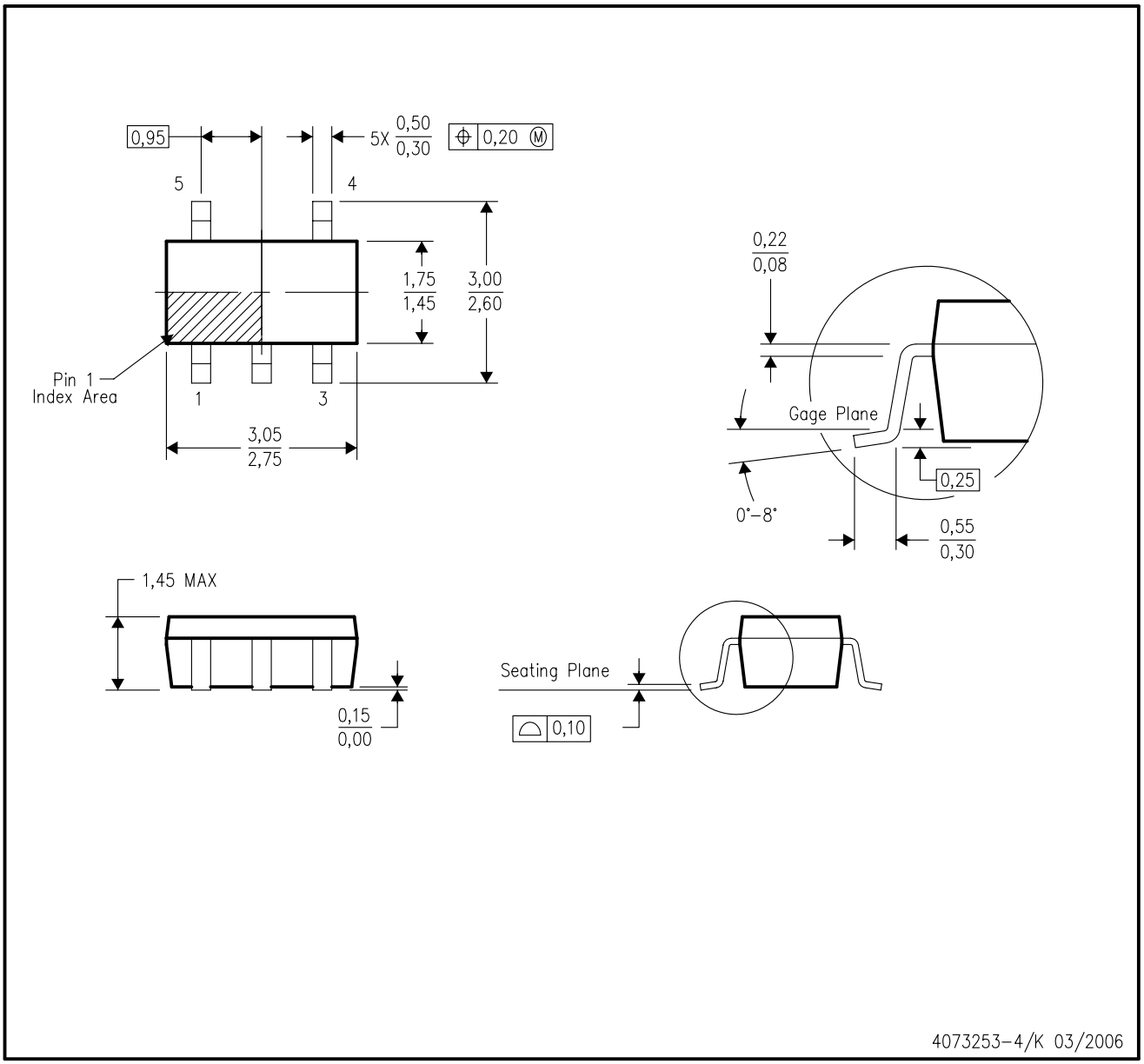

NOTES:
A. All linear dimensions are in millimeters.
B. This drawing is subject to change without notice.
C. Body dimensions do not include mold flash or protrusion. Mold flash and protrusion shall not exceed 0.15 per side.
D. Falls within JEDEC MO–178 Variation AA.

DBV (R-PDSO-G5) PLASTIC SMALL OUTLINE

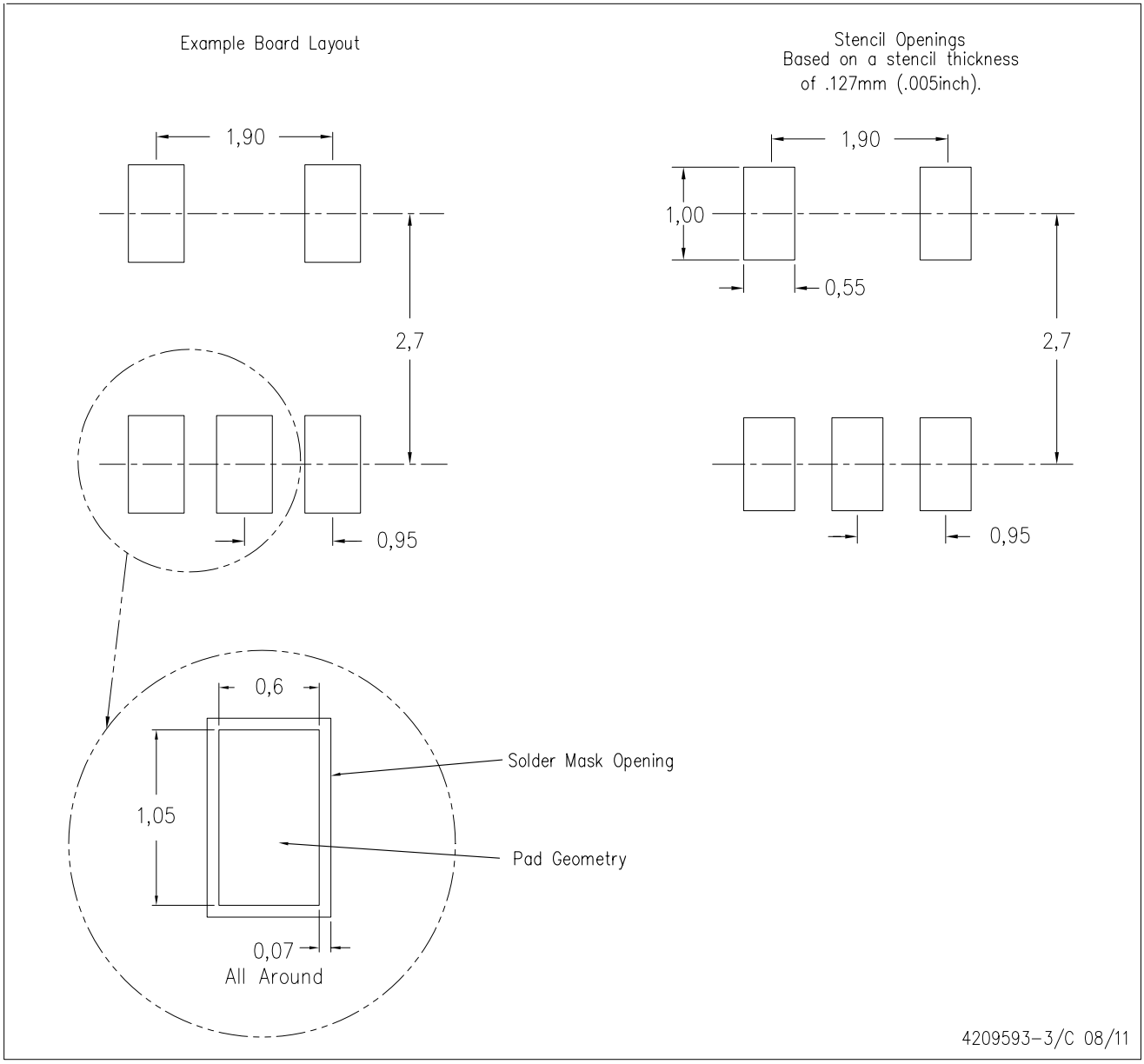

NOTES:
A. All linear dimensions are in millimeters.
B. This drawing is subject to change without notice.
C. Customers should place a note on the circuit board fabrication drawing not to alter the center solder mask defined pad.
D. Publication IPC-7351 is recommended for alternate designs.
E. Laser cutting apertures with trapezoidal walls and also rounding corners will offer better paste release. Customers should contact their board assembly site for stencil design recommendations. Example stencil design based on a 50% volumetric metal load solder paste. Refer to IPC-7525 for other stencil recommendations.

IMPORTANT NOTICE

Texas Instruments Incorporated and its subsidiaries (TI) reserve the right to make corrections, enhancements, improvements and other changes to its semiconductor products and services per JESD46, latest issue, and to discontinue any product or service per JESD48, latest issue. Buyers should obtain the latest relevant information before placing orders and should verify that such information is current and complete. All semiconductor products (also referred to herein as “components”) are sold subject to TI’s terms and conditions of sale supplied at the time of order acknowledgment.

TI warrants performance of its components to the specifications applicable at the time of sale, in accordance with the warranty in TI’s terms and conditions of sale of semiconductor products. Testing and other quality control techniques are used to the extent TI deems necessary to support this warranty. Except where mandated by applicable law, testing of all parameters of each component is not necessarily performed.

TI assumes no liability for applications assistance or the design of Buyers’ products. Buyers are responsible for their products and applications using TI components. To minimize the risks associated with Buyers’ products and applications, Buyers should provide adequate design and operating safeguards.

TI does not warrant or represent that any license, either express or implied, is granted under any patent right, copyright, mask work right, or other intellectual property right relating to any combination, machine, or process in which TI components or services are used. Information published by TI regarding third-party products or services does not constitute a license to use such products or services or a warranty or endorsement thereof. Use of such information may require a license from a third party under the patents or other intellectual property of the third party, or a license from TI under the patents or other intellectual property of TI.

Reproduction of significant portions of TI information in TI data books or data sheets is permissible only if reproduction is without alteration and is accompanied by all associated warranties, conditions, limitations, and notices. TI is not responsible or liable for such altered documentation. Information of third parties may be subject to additional restrictions.

Resale of TI components or services with statements different from or beyond the parameters stated by TI for that component or service voids all express and any implied warranties for the associated TI component or service and is an unfair and deceptive business practice. TI is not responsible or liable for any such statements.

Buyer acknowledges and agrees that it is solely responsible for compliance with all legal, regulatory and safety-related requirements concerning its products, and any use of TI components in its applications, notwithstanding any applications-related information or support that may be provided by TI. Buyer represents and agrees that it has all the necessary expertise to create and implement safeguards which anticipate dangerous consequences of failures, monitor failures and their consequences, lessen the likelihood of failures that might cause harm and take appropriate remedial actions. Buyer will fully indemnify TI and its representatives against any damages arising out of the use of any TI components in safety-critical applications.

In some cases, TI components may be promoted specifically to facilitate safety-related applications. With such components, TI’s goal is to help enable customers to design and create their own end-product solutions that meet applicable functional safety standards and requirements. Nonetheless, such components are subject to these terms.

No TI components are authorized for use in FDA Class III (or similar life-critical medical equipment) unless authorized officers of the parties have executed a special agreement specifically governing such use.

Only those TI components which TI has specifically designated as military grade or “enhanced plastic” are designed and intended for use in military/aerospace applications or environments. Buyer acknowledges and agrees that any military or aerospace use of TI components which have ***not*** been so designated is solely at the Buyer's risk, and that Buyer is solely responsible for compliance with all legal and regulatory requirements in connection with such use.

TI has specifically designated certain components as meeting ISO/TS16949 requirements, mainly for automotive use. In any case of use of non-designated products, TI will not be responsible for any failure to meet ISO/TS16949.

Products		**Applications**	
Audio	www.ti.com/audio	Automotive and Transportation	www.ti.com/automotive
Amplifiers	amplifier.ti.com	Communications and Telecom	www.ti.com/communications
Data Converters	dataconverter.ti.com	Computers and Peripherals	www.ti.com/computers
DLP® Products	www.dlp.com	Consumer Electronics	www.ti.com/consumer-apps
DSP	dsp.ti.com	Energy and Lighting	www.ti.com/energy
Clocks and Timers	www.ti.com/clocks	Industrial	www.ti.com/industrial
Interface	interface.ti.com	Medical	www.ti.com/medical
Logic	logic.ti.com	Security	www.ti.com/security
Power Mgmt	power.ti.com	Space, Avionics and Defense	www.ti.com/space-avionics-defense
Microcontrollers	microcontroller.ti.com	Video and Imaging	www.ti.com/video
RFID	www.ti-rfid.com		
OMAP Applications Processors	www.ti.com/omap	**TI E2E Community**	e2e.ti.com
Wireless Connectivity	www.ti.com/wirelessconnectivity		

Mailing Address: Texas Instruments, Post Office Box 655303, Dallas, Texas 75265
Copyright © 2013, Texas Instruments Incorporated

Mouser Electronics

Authorized Distributor

Click to View Pricing, Inventory, Delivery & Lifecycle Information:

Texas Instruments:

LM3475EVAL