TPS6024x 170-µVrms Zero-Ripple Switched Capacitor Buck-Boost Converter for VCO Supply

1 Features

- Wide Input Voltage Range from 1.8 V to 5.5 V
- Regulated 2.7-V, 3-V, 3.3-V or 5-V Output Voltage With ±2.5% Accuracy Over Load
- Up to 25-mA Output Current
- 170-µVrms Zero Ripple Output: at 20 Hz to 10 MHz Bandwidth
- Up to 90% Efficiency
- Minimum Number of External Components
  - No Inductors
  - Only Small Ceramic Chip Capacitors
- Shutdown Mode: 0.1 µA Typical
- Thermal Protection and Current Limit
- Micro-Small 8-Pin VSSOP Package
- EVM Available TPS60241EVM-194

2 Applications

- VCO and PLL Power for:
  - Smart Phones
  - Mobile Phones
  - PCMCIA Modems
- Smartcard Readers
- Digital Cameras
- MP3 Players
- SIM Modules
- Electronic Games
- Memory Backup
- Handheld Meters
- Bias Supplies

3 Description

The TPS6024x devices are a family of switched capacitor voltage converters, ideally suited for voltage-controlled oscillator (VCO) and phase-locked loop (PLL) applications that require low noise and tight tolerances. Its dual-cap design uses four ceramic capacitors to provide ultra-low output ripple with high efficiency, while eliminating the need for inefficient linear regulators.

The TPS6024x devices operate down to 1.8 V, supporting a 3.3-V, 2.7-V, 3-V output from two-cell, nickel- or alkaline-based chemistries, whereas the TPS60241 works with 2.7-V to 5.5-V input voltage providing a 5-V output. The devices work equally well for low EMI DC–DC step-up conversion without the need for an inductor. The high switching frequency (typical 160 kHz) promotes the use of small surface-mount capacitors, saving board space. The shutdown mode of the converter conserves battery energy.

The devices are thermally protected and current-limited for reliable operation even under persisting fault conditions. Normal quiescent current (ground pin current) is only 250 µA, and typically 0.1 µA in shutdown mode. The TPS6024x devices come in a thin, 8-pin VSSOP package with a component height of only 1.1 mm.

Device Information(1)

PART NUMBER	PACKAGE	OUTPUT VOLTAGE
TPS60240	VSSOP (8)	3.3 V
TPS60241		5 V
TPS60242		2.7 V
TPS60243		3 V

(1) For all available packages, see the orderable addendum at the end of the data sheet.

Typical Application Schematic

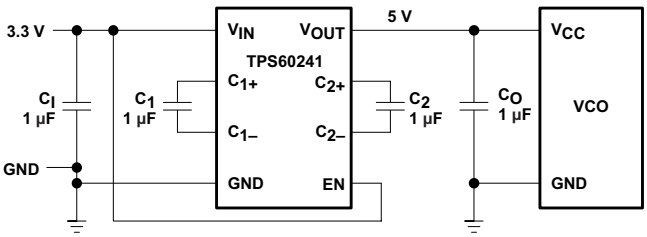

Efficiency vs Output Current

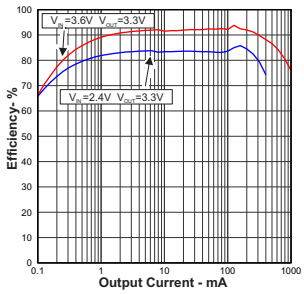

An IMPORTANT NOTICE at the end of this data sheet addresses availability, warranty, changes, use in safety-critical applications, intellectual property matters and other important disclaimers. PRODUCTION DATA.

Table of Contents

1 Features ... 1
2 Applications ... 1
3 Description ... 1
4 Revision History ... 2
5 Pin Configuration and Functions ... 3
6 Specifications ... 4
6.1 Absolute Maximum Ratings ... 4
6.2 ESD Ratings ... 4
6.3 Recommended Operating Conditions ... 4
6.4 Thermal Information ... 4
6.5 Electrical Characteristics ... 5
6.6 Typical Characteristics ... 6
7 Detailed Description ... 7
7.1 Overview ... 7
7.2 Functional Block Diagram ... 7
7.3 Feature Description ... 8
7.4 Device Functional Modes ... 8
8 Application and Implementation ... 9
8.1 Application Information ... 9
8.2 Typical Applications ... 9
9 Power Supply Recommendations ... 16
10 Layout ... 16
10.1 Layout Guidelines ... 16
10.2 Layout Examples ... 16
11 Device and Documentation Support ... 17
11.1 Device Support ... 17
11.2 Related Links ... 17
11.3 Community Resources ... 17
11.4 Trademarks ... 17
11.5 Electrostatic Discharge Caution ... 17
11.6 Glossary ... 17
12 Mechanical, Packaging, and Orderable Information ... 17

4 Revision History

NOTE: Page numbers for previous revisions may differ from page numbers in the current version.

Changes from Revision B (January 2002) to Revision C	Page
• Added *Pin Configuration and Functions* section, *ESD Ratings* table, *Feature Description* section, *Device Functional Modes*, *Application and Implementation* section, *Power Supply Recommendations* section, *Layout* section, *Device and Documentation Support* section, and *Mechanical, Packaging, and Orderable Information* section	1
• C1509178 - Changed the max values for quiescent current and switching frequency. Change From:* 325 µA / 220 kHz; Change To:* 400 µA / 300 kHz	5

Copyright © 2001–2015, Texas Instruments Incorporated

5 Pin Configuration and Functions

DGK Package
8-Pin VSSOP
Top View

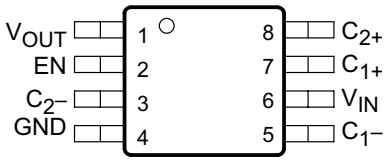

Pin Functions

PIN		I/O	DESCRIPTION
NAME	NO.		
C_{1+}	7	—	Positive pin of the flying capacitor C_1
C_{1-}	5	—	Negative pin of the flying capacitor C_1
C_{2+}	8	—	Positive pin of the flying capacitor C_2
C_{2-}	3	—	Negative pin of the flying capacitor C_2
EN	2	I	Enable pin, active high
GND	4	—	Ground
V_{IN}	6	I	Supply voltage input TPS60241: 2.7 V to 5.5 V, TPS60240/2/3: 1.8 V to 5.5 V. Bypass V_{IN} to GND with a 1-µF external capacitor (C_{IN}).
V_{OUT}	1	O	Regulated power output. Bypass V_{OUT} to GND with a 1-µF external filter capacitor (C_{OUT}). TPS60241: regulated 5-V output, TPS60240: regulated 3.3-V output, TPS60242: regulated 2.7-V output, TPS60243: regulated 3-V output

Copyright © 2001–2015, Texas Instruments Incorporated

6 Specifications

6.1 Absolute Maximum Ratings

Over operating free-air temperature range (unless otherwise noted) (1)

		MIN	MAX	UNIT
V_{DD}	Supply voltage	–0.3	6	V
P_D	Power dissipation	Internally limited		
	Voltage EN	–0.3	6	V
	Voltage C_{2-}, C_{1-}	–0.3	V_{IN} or 5.5 (2)	V
	Voltage C_{2+}, C_{1+}	–0.3	V_{IN}, V_{OUT}, or 5.5 (2)	V
T_J	Junction temperature		125	°C
	Short circuit output current		80	mA
T_{stg}	Storage temperature	–65	150	°C

(1) Stresses beyond those listed under *Absolute Maximum Ratings* may cause permanent damage to the device. These are stress ratings only, which do not imply functional operation of the device at these or any other conditions beyond those indicated under *Recommended Operating Conditions*. Exposure to absolute-maximum-rated conditions for extended periods may affect device reliability.
(2) Whichever is lowest.

6.2 ESD Ratings

			VALUE	UNIT
$V_{(ESD)}$	Electrostatic discharge	Human body model (HBM), per ANSI/ESDA/JEDEC JS-001 (1)	±2000	V
		Charged-device model (CDM), per JEDEC specification JESD22-C101 (2)	±500	

(1) JEDEC document JEP155 states that 500-V HBM allows safe manufacturing with a standard ESD control process.
(2) JEDEC document JEP157 states that 250-V CDM allows safe manufacturing with a standard ESD control process.

6.3 Recommended Operating Conditions

Over operating free-air temperature range (unless otherwise noted)

			MIN	NOM	MAX	UNIT
V_{IN}	Input voltage	TPS60240, TPS60242, TPS60243	1.8		5.5	V
		TPS60241	2.7		5.5	
I_{OUT}	Output current	All devices		25		mA
C_{IN}	Input capacitor			1		µF
C_1, C_2	Flying capacitors			1		µF
C_{OUT}	Output capacitor			1		µF
T_A	Operating temperature		–40		85	°C

6.4 Thermal Information

THERMAL METRIC (1)		TPS6024x DGK (VSSOP) 8 PINS	UNIT
$R_{\theta JA}$	Junction-to-ambient thermal resistance	174	°C/W
$R_{\theta JC(top)}$	Junction-to-case (top) thermal resistance	66	°C/W
$R_{\theta JB}$	Junction-to-board thermal resistance	95	°C/W
ψ_{JT}	Junction-to-top characterization parameter	8.8	°C/W
ψ_{JB}	Junction-to-board characterization parameter	94	°C/W
$R_{\theta JC(bot)}$	Junction-to-case (bottom) thermal resistance	n/a	°C/W

(1) For more information about traditional and new thermal metrics, see the *Semiconductor and IC Package Thermal Metrics* application report, SPRA953.

Copyright © 2001–2015, Texas Instruments Incorporated

6.5 Electrical Characteristics

For TPS6024x at T_A = 25°C, C_{IN} = C_{OUT} =1 µF, C_1 = C_2 = 1 µF (unless otherwise noted), limits apply over the specified temperature range, –40°C to 85°C.

PARAMETER				TEST CONDITIONS	MIN	TYP	MAX	UNIT
V_{IN}	Input voltage	TPS60240 assured start-up		I_{OUT} ≤ 5 mA, R_L = 600 Ω	1.8		5.5	V
		TPS60241 assured start-up		I_{OUT} ≤ 12 mA, R_L = 417 Ω	2.7		5.5	
		TPS60242 assured start-up		I_{OUT} ≤ 12 mA, R_L = 225 Ω	1.8		5.5	
		TPS60243 assured start-up		I_{OUT} ≤ 10 mA, R_L = 300 Ω	1.8		5.5	
V_{OUT}	Output voltage	TPS60240		1.8 V ≤ V_{IN} ≤ 5.5 V, 0 mA ≤ I_{OUT} ≤ 5 mA	3.2175	3.3	3.3825	V
				2.4 V ≤ V_{IN} ≤ 5.5 V, 0 mA ≤ I_{OUT} ≤ 25 mA	3.2175	3.3	3.3825	
		TPS60241		2.7 V ≤ V_{IN} ≤ 5.5 V, 0 mA ≤ I_{OUT} ≤ 12 mA	4.875	5	5.125	
				3 V ≤ V_{IN} ≤ 5.5 V, 0 mA ≤ I_{OUT} ≤ 25 mA	4.875	5	5.125	
		TPS60242		1.8 V ≤ V_{IN} ≤ 5.5 V, 0 mA ≤ I_{OUT} ≤ 12 mA	2.6325	2.7	2.7675	
				2.3 V ≤ V_{IN} ≤ 5.5 V, 0 mA ≤ I_{OUT} ≤ 25 mA	2.6325	2.7	2.7675	
		TPS60243		1.8 V ≤ V_{IN} ≤ 5.5 V, 0 mA ≤ I_{OUT} ≤ 10 mA	2.925	3	3.075	
				2.3 V ≤ V_{IN} ≤ 5.5 V, 0 mA ≤ I_{OUT} ≤ 25 mA	2.925	3	3.075	
I_{OUT}	Output current	TPS60240/2/3	Nominal	2 V ≤ V_{IN} ≤ 5.5 V	12			mA
			Short circuit	V_{IN} = 2 V			80	
		TPS60241	Nominal	2.7 V ≤ V_{IN} ≤ 5.5 V	12			
			Short circuit	V_{IN} = 3.25 V			80	
f_{OSC}	Internal clock source				100	160	300	kHz
V_n	Output noise voltage	TPS60240/2/3		V_{IN} < 2.5 V, I_{OUT} = 5 mA, ESR < 0.1 Ω, Measured over 20 Hz to 10 MHz, C_{OUT} = 4.7 µF		170		µV RMS
		TPS60241		V_{IN} = 2.7 V, I_{OUT} = 5 mA, ESR < 0.1 Ω, Measured over 20 Hz to 10 MHz, C_{OUT} = 4.7 µF		170		
V_{IH}	Logic high input voltage, EN				1.3		5.5	V
V_{IL}	Logic low input voltage, EN				–0.2		0.4	V
I_{IH}	Logic high input current, EN						100	nA
I_{IL}	Logic low input current, EN						100	nA
$t_{(EN)}$	Start-up time, EN			V_{OUT} > 90% of $V_{(NOM)}$, 0.1 mA ≤ I_{OUT} ≤ 10 mA, C_{OUT} = 1 µF		0.5		ms
η	Efficiency	TPS60240		I_{OUT} = 5 mA, V_{IN} = 1.8 V		89.6%		
		TPS60241		I_{OUT} = 10 mA, V_{IN} = 2.7 V		90.8%		
		TPS60242		I_{OUT} = 10 mA, V_{IN} = 1.8 V		73%		
		TPS60243		I_{OUT} = 10 mA, V_{IN} = 1.8 V		81%		
I_Q	Quiescent current			I_{OUT} = 0 mA, V_{IN} = 3 V		250	400	µA
				In shutdown mode		0.1	1	
	Thermal shutdown	Temperature activated				160		°C
		Temperature deactivated				140		

6.6 Typical Characteristics

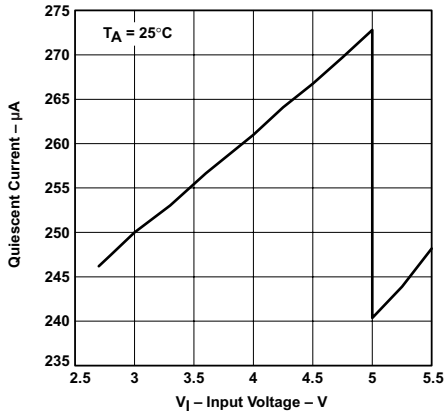

Figure 1. TPS60241
Quiescent Current vs Input Voltage

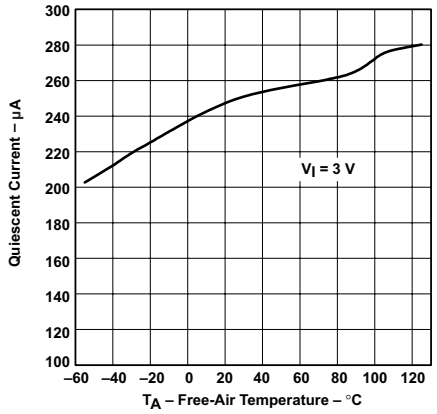

Figure 2. TPS60241
Quiescent Current vs Free-Air Temperature

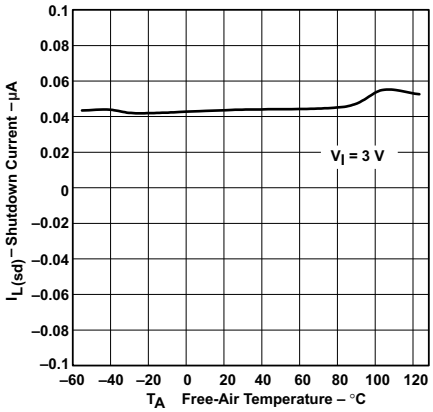

Figure 3. TPS60241
Shutdown Current vs Free-Air Temperature

Copyright © 2001–2015, Texas Instruments Incorporated

7 Detailed Description

7.1 Overview

The TPS6024x device is a fixed-frequency, dual-phase charge pump that provides 25 mA of continuous supply current for low-noise applications such as VCOs used in mobile phones and wireless applications.

Low-noise operation results from using a proprietary dual-phase charge pump topology that relies on an operational amplifier in the feedback loop to reduce ripple. During the first phase, C_1 is charged to the supply voltage. Pin C_{1+} is connected to V_{IN}, and C_{1-} is connected to GND. In the second phase, C_{1-} is connected to the output of the operational amplifier, and C_{1+} is connected to V_{OUT}. The operational amplifier then adjusts its output until the output V_{OUT} delivers the correct voltage to make the resistor divided feedback point equal to the reference voltage. During this second phase, C_2 is charged to supply voltage. Terminal C_{2-} is connected to GND, and C_{2+} is connected to V_{IN}. Phase one is then repeated with C_2, now acting to provide charge to the output in place of C_1, which is connected to the supply. The dual-phase operation lowers the output ripple voltage significantly compared to a standard single-phase charge pump. In addition, the linear feedback of the operational amplifier eliminates the ripple during discharge of the output capacitor (C_{OUT}).

7.2 Functional Block Diagram

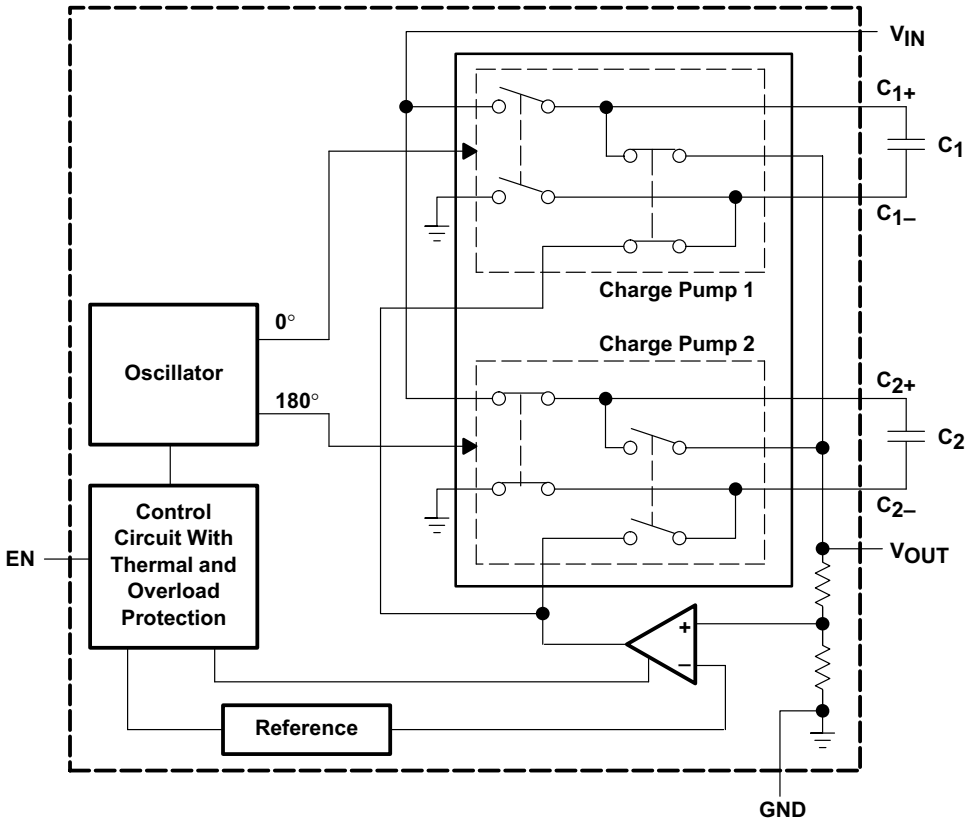

7.3 Feature Description

7.3.1 Thermal Shutdown

The TPS6024x device has a built-in thermal shutdown which turns off the power stage when the junction temperature exceeds typical 160°C. When the junction temperature drops to typical 140°C, the device starts switching again.

7.3.2 Current Limit

The TPS6024x device has a built-in overload protection which limits the output current.

7.4 Device Functional Modes

7.4.1 Start-up Procedure

The converter is enabled when EN is set from logic low to high. The start-up time to reach 90% of the nominal output voltage is typically 0.5 ms at load currents lower than 10 mA and with an output capacitor of 1 µF. Increasing the values of C_{OUT} delays the start-up time.

7.4.2 Shutdown

Driving EN low disables the converter. This disables the internal circuits and reduces input current to typically 0.1 µA. In this mode, the load is disconnected from the supply voltage. The device exits shutdown once EN is set to a high level.

Copyright © 2001–2015, Texas Instruments Incorporated

8 Application and Implementation

NOTE

Information in the following applications sections is not part of the TI component specification, and TI does not warrant its accuracy or completeness. TI's customers are responsible for determining suitability of components for their purposes. Customers should validate and test their design implementation to confirm system functionality.

8.1 Application Information

The TPS6024x is a switched capacitor voltage converter for VCO and PLL applications providing low noise conversion and tight tolerances. It supports regulated output voltages of 2.7 V, 3 V and 3.3 V from a 1.8-V to 5.5-V input voltage range. The TPS60241 generates 5-V output voltage from an 2.7-V to 5.5-V input voltage range.

8.2 Typical Applications

8.2.1 5-V Low-Noise VCO Supply from 3.3-V Input

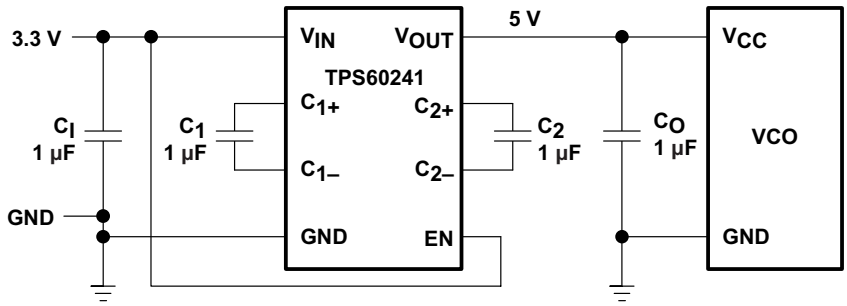

Figure 4. 5-V Low-Noise VCO Supply from 3.3-V Input

8.2.1.1 Design Requirements

The complete charge pump circuitry requires no inductors and only four small ceramic capacitors.

8.2.1.2 Detailed Design Procedure

8.2.1.2.1 Output Voltage Ripple

The output voltage ripple depends on the capacitors used. Table 1 shows the dependence between output voltage ripple and capacitor selection.

Table 1. Output Voltage Ripple and Capacitor Selection (1)

C_I	C_O	C_1	C_2	OUTPUT VOLTAGE RIPPLE [µVrms]
1 µF	1 µF	1 µF	1 µF	288
2.2 µF	2.2 µF	1 µF	1 µF	212
4.7 µF	4.7 µF	1 µF	1 µF	183
4.7 µF	1 µF	1 µF	1 µF	272
1 µF	4.7 µF	1 µF	1 µF	185

(1) NOTE: V_{IN} = 3.3 V, V_{OUT} = 5 V, R_L = 500 Ω, T_A = 25°C

For the best output ripple performance, low-ESR ceramic capacitors are recommended (see Table 2).

Table 2. Recommended Capacitors

PART	MANUFACTURER	PART NUMBER	VALUE	TOLERANCE	DIELECTRIC MATERIAL	PACKAGE	RATED VOLTAGE
CI	Taiyo Yuden	LMK212BJ105KG–T	1 µF	10%	X7R	0805	10
	TDK	C2012X5R0J475K	4.7 µF	10%	X5R	0805	6.3
CO	Taiyo Yuden	LMK212BJ105KG–T	1 µF	10%	X7R	0805	10
	TDK	C2012X5R0J475K	4.7 µF	10%	X5R	0805	6.3
C1, C2	Taiyo Yuden	LMK212BJ105KG–T	1 µF	10%	X7R	0805	10
CF	Taiyo Yuden	LMK212BJ105KG–T	1 µF	10%	X7R	0805	10

8.2.1.3 Application Curves

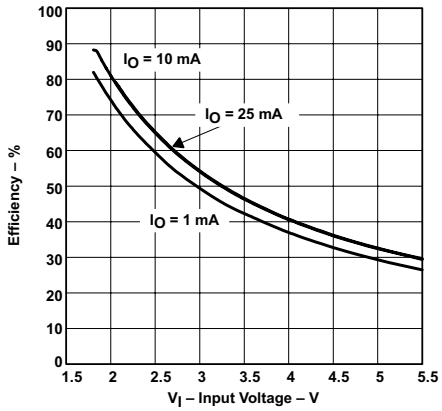

Figure 5. TPS60240 Efficiency vs Input Voltage

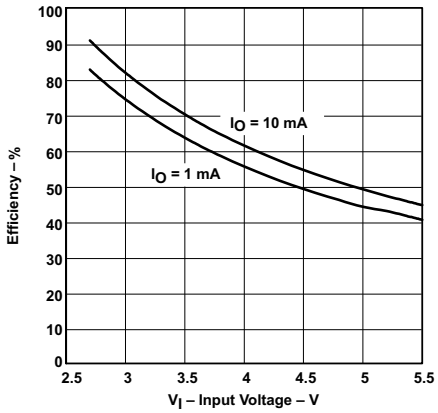

Figure 6. TPS60241 Efficiency vs Input Voltage

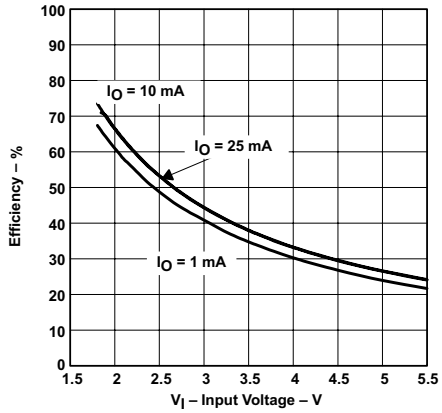

Figure 7. TPS60242 Efficiency vs Input Voltage

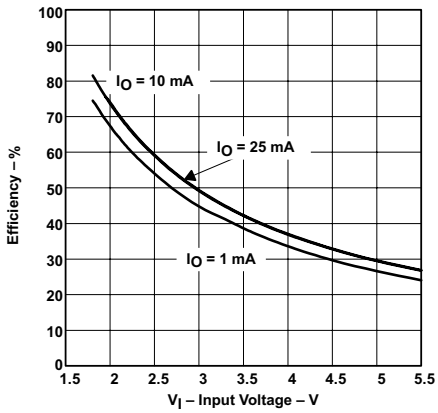

Figure 8. TPS60243 Efficiency vs Input Voltage

Copyright © 2001–2015, Texas Instruments Incorporated

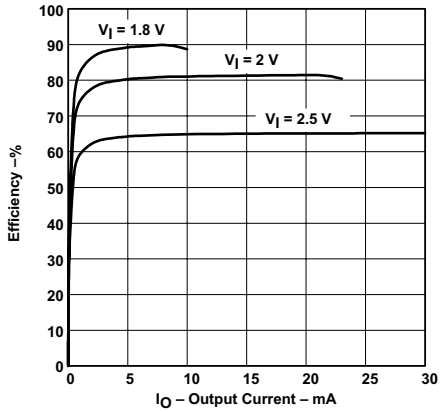

Figure 9. TPS60240
Efficiency vs Output Voltage

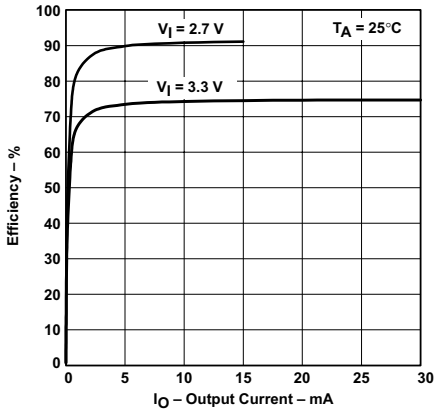

Figure 10. TPS60241
Efficiency vs Output Voltage

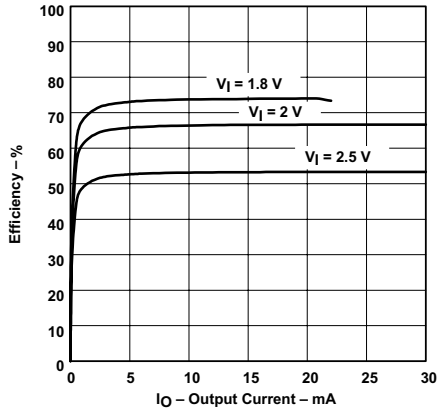

Figure 11. TPS60242
Efficiency vs Output Voltage

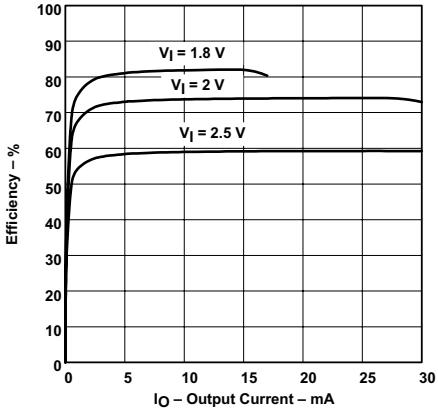

Figure 12. TPS60243
Efficiency vs Output Voltage

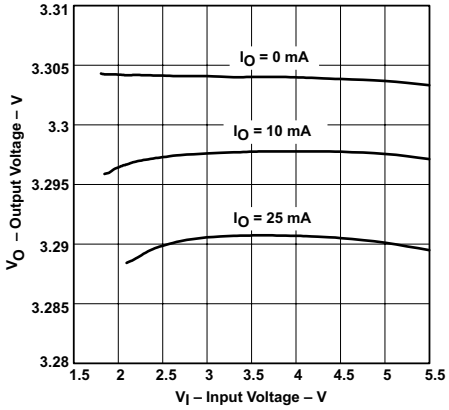

Figure 13. TPS60240
Output Voltage vs Input Voltage

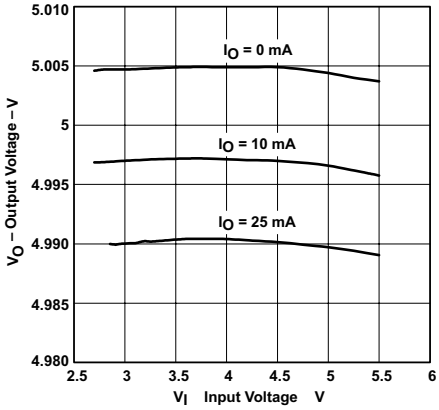

Figure 14. TPS60241
Output Voltage vs Input Voltage

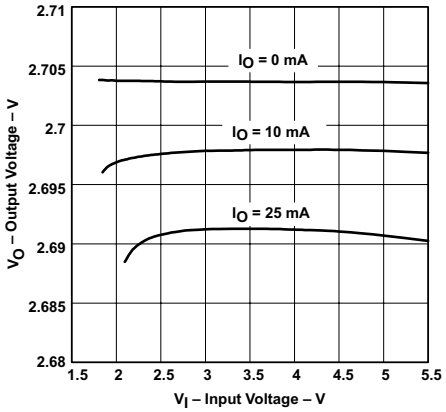

Figure 15. TPS60242
Output Voltage vs Input Voltage

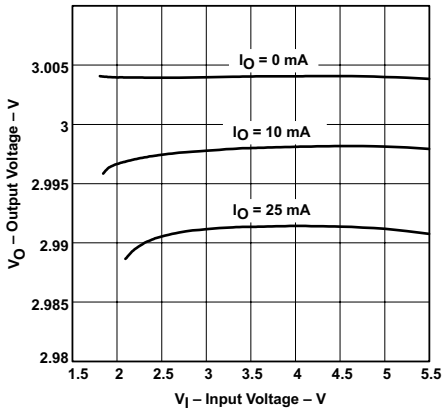

Figure 16. TPS60243
Output Voltage vs Input Voltage

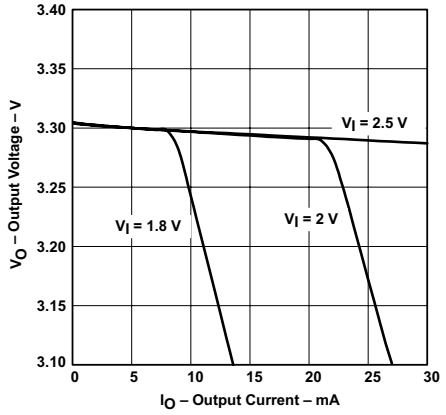

Figure 17. TPS60240
Output Voltage vs Output Current

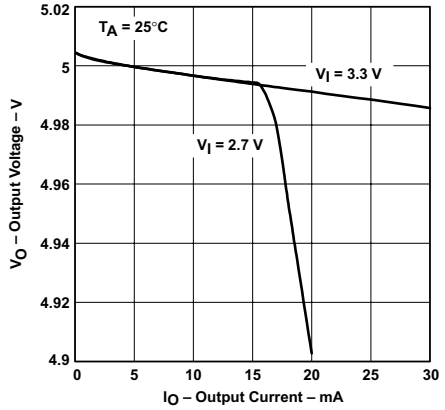

Figure 18. TPS60241
Output Voltage vs Output Current

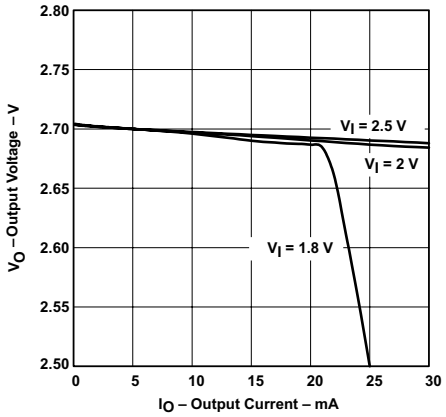

Figure 19. TPS60242
Output Voltage vs Output Current

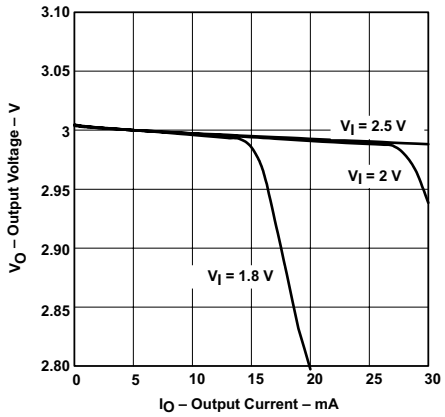

Figure 20. TPS60243
Output Voltage vs Output Current

Copyright © 2001–2015, Texas Instruments Incorporated

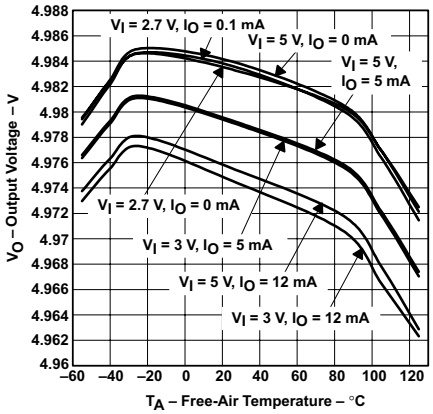

Figure 21. TPS60241
Output Voltage vs Free-Air Temperature

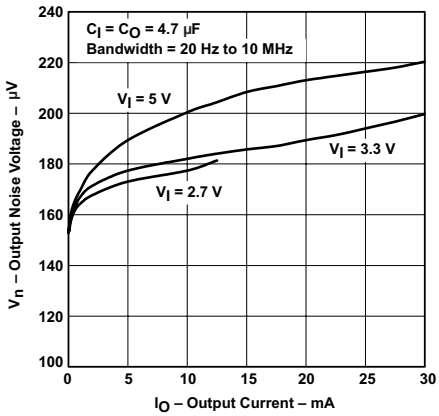

Figure 22. TPS60241
Output Noise Voltage vs Output Current

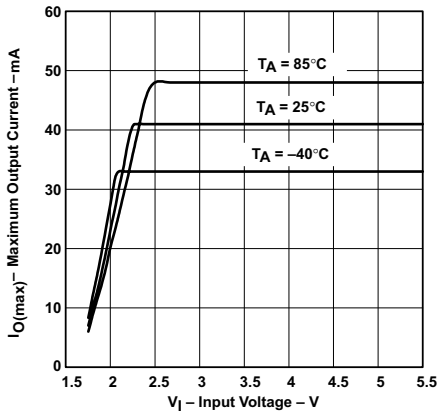

Figure 23. TPS60240
Maximum Output Current vs Input Voltage

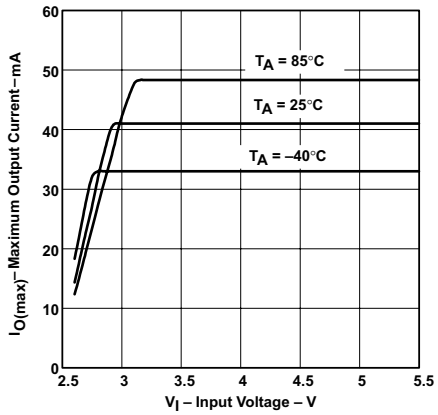

Figure 24. TPS60241
Maximum Output Current vs Input Voltage

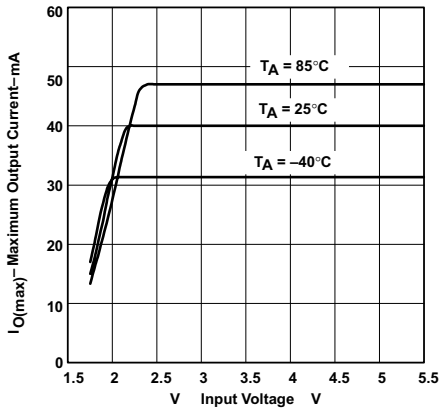

Figure 25. TPS60242
Maximum Output Current vs Input Voltage

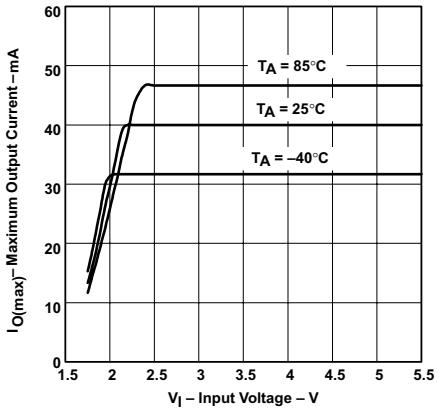

Figure 26. TPS60243
Maximum Output Current vs Input Voltage

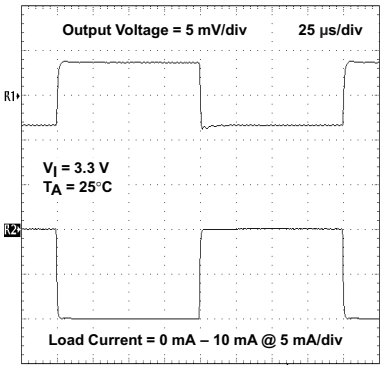

Figure 27. Load Transient Response

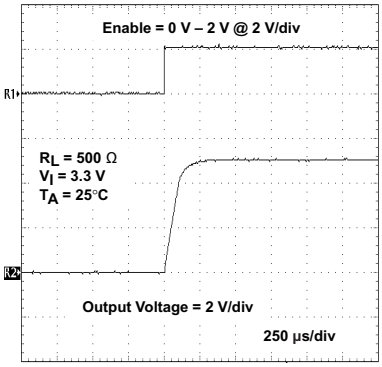

Figure 28. Start-Up Timing

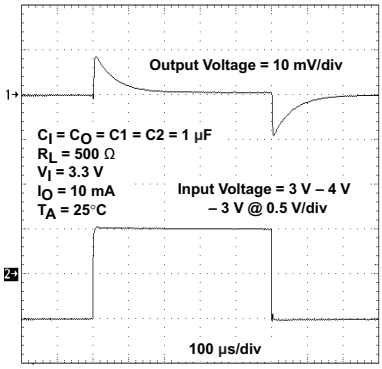

Figure 29. Line Transient Response

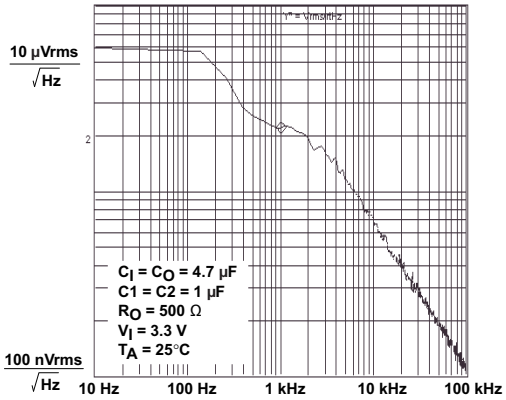

Figure 30. TPS60241
Noise Voltage Spectrum

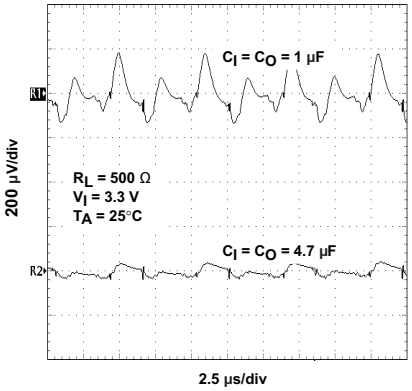

NOTE: Scope triggered by voltage at flying capacitors, noise removed by averaging function and bandwidth limit 20 MHz.

Figure 31. TPS60241
Output Voltage Ripple vs Time

Copyright © 2001–2015, Texas Instruments Incorporated

8.2.2 2-V to 3.3-V Low-Noise Converter

Standard application as a low noise boost converter. The device generates a regulated output voltage of 3.3 V from a 2-V supply with only 4 external 1-µF ceramic capacitors.

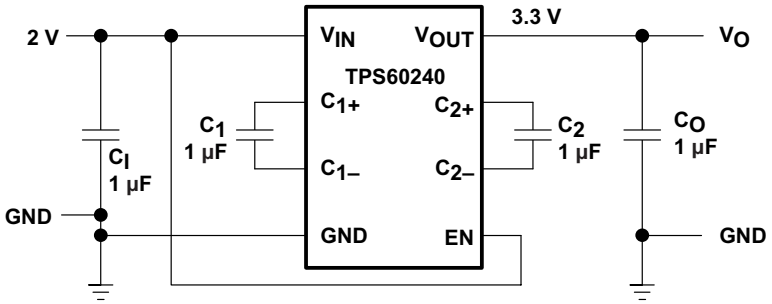

Figure 32. 2-V to 3.3-V Low-Noise Converter

9 Power Supply Recommendations

The TPS6024x devices have no special requirements for the input power supply. The output current of the input power supply must be rated according to the supply voltage, output voltage, and output current of the TPS6024x.

10 Layout

10.1 Layout Guidelines

To achieve optimal noise behavior, keep the power lines to the capacitors and load as short as possible. Use of power planes is recommended.

10.2 Layout Examples

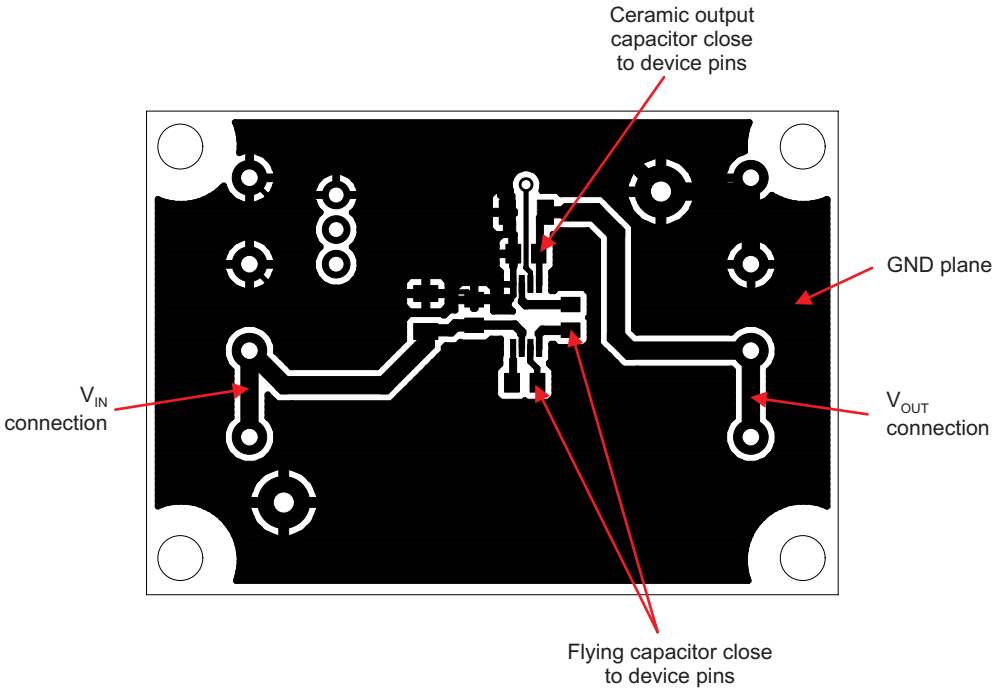

Figure 33. Top Layer

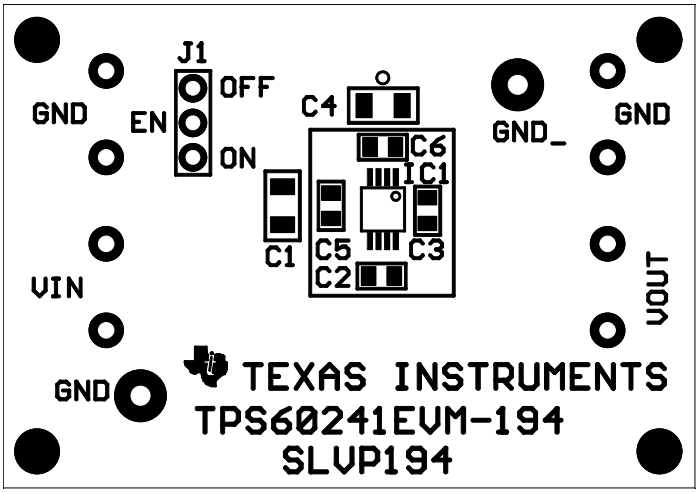

Figure 34. Top Silkscreen

Copyright © 2001–2015, Texas Instruments Incorporated

11 Device and Documentation Support

11.1 Device Support

11.1.1 Third-Party Products Disclaimer

TI'S PUBLICATION OF INFORMATION REGARDING THIRD-PARTY PRODUCTS OR SERVICES DOES NOT CONSTITUTE AN ENDORSEMENT REGARDING THE SUITABILITY OF SUCH PRODUCTS OR SERVICES OR A WARRANTY, REPRESENTATION OR ENDORSEMENT OF SUCH PRODUCTS OR SERVICES, EITHER ALONE OR IN COMBINATION WITH ANY TI PRODUCT OR SERVICE.

11.2 Related Links

The table below lists quick access links. Categories include technical documents, support and community resources, tools and software, and quick access to sample or buy.

Table 3. Related Links

PARTS	PRODUCT FOLDER	SAMPLE & BUY	TECHNICAL DOCUMENTS	TOOLS & SOFTWARE	SUPPORT & COMMUNITY
TPS60240	Click here	Click here	Click here	Click here	Click here
TPS60241	Click here	Click here	Click here	Click here	Click here
TPS60242	Click here	Click here	Click here	Click here	Click here
TPS60243	Click here	Click here	Click here	Click here	Click here

11.3 Community Resources

The following links connect to TI community resources. Linked contents are provided "AS IS" by the respective contributors. They do not constitute TI specifications and do not necessarily reflect TI's views; see TI's Terms of Use.

TI E2E™ Online Community ***TI's Engineer-to-Engineer (E2E) Community.*** Created to foster collaboration among engineers. At e2e.ti.com, you can ask questions, share knowledge, explore ideas and help solve problems with fellow engineers.

Design Support ***TI's Design Support*** Quickly find helpful E2E forums along with design support tools and contact information for technical support.

11.4 Trademarks

E2E is a trademark of Texas Instruments.
All other trademarks are the property of their respective owners.

11.5 Electrostatic Discharge Caution

These devices have limited built-in ESD protection. The leads should be shorted together or the device placed in conductive foam during storage or handling to prevent electrostatic damage to the MOS gates.

11.6 Glossary

SLYZ022 — *TI Glossary*.

This glossary lists and explains terms, acronyms, and definitions.

12 Mechanical, Packaging, and Orderable Information

The following pages include mechanical, packaging, and orderable information. This information is the most current data available for the designated devices. This data is subject to change without notice and revision of this document. For browser-based versions of this data sheet, refer to the left-hand navigation.

PACKAGING INFORMATION

Orderable Device	Status (1)	Package Type	Package Drawing	Pins	Package Qty	Eco Plan (2)	Lead/Ball Finish (6)	MSL Peak Temp (3)	Op Temp (°C)	Device Marking (4/5)	Samples
TPS60240DGK	OBSOLETE	VSSOP	DGK	8		TBD	Call TI	Call TI			
TPS60240DGKR	ACTIVE	VSSOP	DGK	8	2500	Green (RoHS & no Sb/Br)	CU NIPDAUAG	Level-2-260C-1 YEAR	-40 to 85	ATM	Samples
TPS60240DGKT	ACTIVE	VSSOP	DGK	8	250	Green (RoHS & no Sb/Br)	CU NIPDAUAG	Level-2-260C-1 YEAR	-40 to 85	ATM	Samples
TPS60240DGKTG4	ACTIVE	VSSOP	DGK	8	250	Green (RoHS & no Sb/Br)	CU NIPDAUAG	Level-2-260C-1 YEAR	-40 to 85	ATM	Samples
TPS60241DGKR	ACTIVE	VSSOP	DGK	8	2500	Green (RoHS & no Sb/Br)	CU NIPDAUAG	Level-2-260C-1 YEAR	-40 to 85	AUB	Samples
TPS60241DGKRG4	ACTIVE	VSSOP	DGK	8	2500	Green (RoHS & no Sb/Br)	CU NIPDAUAG	Level-2-260C-1 YEAR	-40 to 85	AUB	Samples
TPS60241DGKT	ACTIVE	VSSOP	DGK	8	250	Green (RoHS & no Sb/Br)	CU NIPDAUAG	Level-2-260C-1 YEAR	-40 to 85	AUB	Samples
TPS60241DGKTG4	ACTIVE	VSSOP	DGK	8	250	Green (RoHS & no Sb/Br)	CU NIPDAUAG	Level-2-260C-1 YEAR	-40 to 85	AUB	Samples
TPS60242DGK	OBSOLETE	VSSOP	DGK	8		TBD	Call TI	Call TI			
TPS60242DGKT	ACTIVE	VSSOP	DGK	8	250	Green (RoHS & no Sb/Br)	CU NIPDAUAG	Level-2-260C-1 YEAR	-40 to 85	AYF	Samples
TPS60243DGK	OBSOLETE	VSSOP	DGK	8		TBD	Call TI	Call TI			
TPS60243DGKR	ACTIVE	VSSOP	DGK	8	2500	Green (RoHS & no Sb/Br)	CU NIPDAUAG	Level-2-260C-1 YEAR	-40 to 85	AYG	Samples
TPS60243DGKT	ACTIVE	VSSOP	DGK	8	250	Green (RoHS & no Sb/Br)	CU NIPDAUAG	Level-2-260C-1 YEAR	-40 to 85	AYG	Samples
TPS60243DGKTG4	ACTIVE	VSSOP	DGK	8	250	Green (RoHS & no Sb/Br)	CU NIPDAUAG	Level-2-260C-1 YEAR	-40 to 85	AYG	Samples

(1) The marketing status values are defined as follows:
ACTIVE: Product device recommended for new designs.
LIFEBUY: TI has announced that the device will be discontinued, and a lifetime-buy period is in effect.
NRND: Not recommended for new designs. Device is in production to support existing customers, but TI does not recommend using this part in a new design.
PREVIEW: Device has been announced but is not in production. Samples may or may not be available.
OBSOLETE: TI has discontinued the production of the device.

(2) Eco Plan - The planned eco-friendly classification: Pb-Free (RoHS), Pb-Free (RoHS Exempt), or Green (RoHS & no Sb/Br) - please check http://www.ti.com/productcontent for the latest availability information and additional product content details.

TBD: The Pb-Free/Green conversion plan has not been defined.
Pb-Free (RoHS): TI's terms "Lead-Free" or "Pb-Free" mean semiconductor products that are compatible with the current RoHS requirements for all 6 substances, including the requirement that lead not exceed 0.1% by weight in homogeneous materials. Where designed to be soldered at high temperatures, TI Pb-Free products are suitable for use in specified lead-free processes.
Pb-Free (RoHS Exempt): This component has a RoHS exemption for either 1) lead-based flip-chip solder bumps used between the die and package, or 2) lead-based die adhesive used between the die and leadframe. The component is otherwise considered Pb-Free (RoHS compatible) as defined above.
Green (RoHS & no Sb/Br): TI defines "Green" to mean Pb-Free (RoHS compatible), and free of Bromine (Br) and Antimony (Sb) based flame retardants (Br or Sb do not exceed 0.1% by weight in homogeneous material)

(3) MSL, Peak Temp. - The Moisture Sensitivity Level rating according to the JEDEC industry standard classifications, and peak solder temperature.

(4) There may be additional marking, which relates to the logo, the lot trace code information, or the environmental category on the device.

(5) Multiple Device Markings will be inside parentheses. Only one Device Marking contained in parentheses and separated by a "~" will appear on a device. If a line is indented then it is a continuation of the previous line and the two combined represent the entire Device Marking for that device.

(6) Lead/Ball Finish - Orderable Devices may have multiple material finish options. Finish options are separated by a vertical ruled line. Lead/Ball Finish values may wrap to two lines if the finish value exceeds the maximum column width.

Important Information and Disclaimer: The information provided on this page represents TI's knowledge and belief as of the date that it is provided. TI bases its knowledge and belief on information provided by third parties, and makes no representation or warranty as to the accuracy of such information. Efforts are underway to better integrate information from third parties. TI has taken and continues to take reasonable steps to provide representative and accurate information but may not have conducted destructive testing or chemical analysis on incoming materials and chemicals. TI and TI suppliers consider certain information to be proprietary, and thus CAS numbers and other limited information may not be available for release.

In no event shall TI's liability arising out of such information exceed the total purchase price of the TI part(s) at issue in this document sold by TI to Customer on an annual basis.

TAPE AND REEL INFORMATION

REEL DIMENSIONS

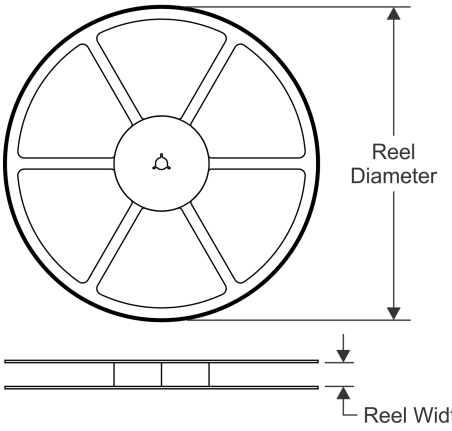

TAPE DIMENSIONS

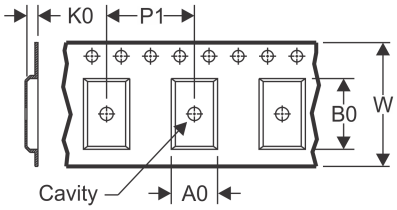

A0	Dimension designed to accommodate the component width
B0	Dimension designed to accommodate the component length
K0	Dimension designed to accommodate the component thickness
W	Overall width of the carrier tape
P1	Pitch between successive cavity centers

QUADRANT ASSIGNMENTS FOR PIN 1 ORIENTATION IN TAPE

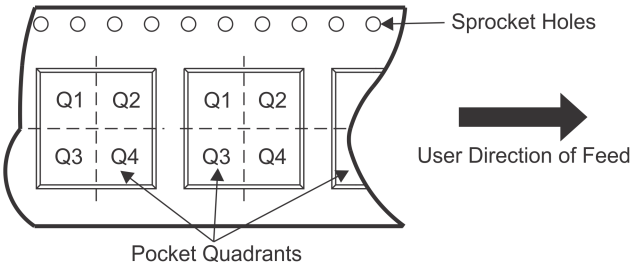

*All dimensions are nominal

Device	Package Type	Package Drawing	Pins	SPQ	Reel Diameter (mm)	Reel Width W1 (mm)	A0 (mm)	B0 (mm)	K0 (mm)	P1 (mm)	W (mm)	Pin1 Quadrant
TPS60240DGKR	VSSOP	DGK	8	2500	330.0	12.4	5.3	3.4	1.4	8.0	12.0	Q1
TPS60240DGKT	VSSOP	DGK	8	250	330.0	12.4	5.3	3.4	1.4	8.0	12.0	Q1
TPS60241DGKR	VSSOP	DGK	8	2500	330.0	12.4	5.3	3.4	1.4	8.0	12.0	Q1
TPS60241DGKT	VSSOP	DGK	8	250	330.0	12.4	5.3	3.4	1.4	8.0	12.0	Q1
TPS60242DGKT	VSSOP	DGK	8	250	330.0	12.4	5.3	3.4	1.4	8.0	12.0	Q1
TPS60243DGKR	VSSOP	DGK	8	2500	330.0	12.4	5.3	3.4	1.4	8.0	12.0	Q1
TPS60243DGKT	VSSOP	DGK	8	250	330.0	12.4	5.3	3.4	1.4	8.0	12.0	Q1

TAPE AND REEL BOX DIMENSIONS

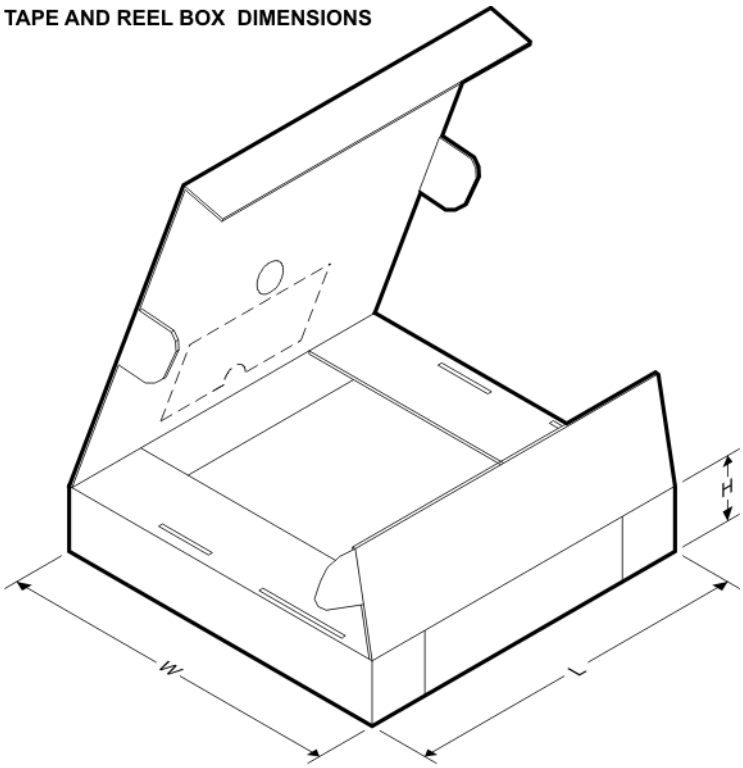

*All dimensions are nominal

Device	Package Type	Package Drawing	Pins	SPQ	Length (mm)	Width (mm)	Height (mm)
TPS60240DGKR	VSSOP	DGK	8	2500	366.0	364.0	50.0
TPS60240DGKT	VSSOP	DGK	8	250	366.0	364.0	50.0
TPS60241DGKR	VSSOP	DGK	8	2500	366.0	364.0	50.0
TPS60241DGKT	VSSOP	DGK	8	250	366.0	364.0	50.0
TPS60242DGKT	VSSOP	DGK	8	250	366.0	364.0	50.0
TPS60243DGKR	VSSOP	DGK	8	2500	366.0	364.0	50.0
TPS60243DGKT	VSSOP	DGK	8	250	366.0	364.0	50.0

IMPORTANT NOTICE

Texas Instruments Incorporated and its subsidiaries (TI) reserve the right to make corrections, enhancements, improvements and other changes to its semiconductor products and services per JESD46, latest issue, and to discontinue any product or service per JESD48, latest issue. Buyers should obtain the latest relevant information before placing orders and should verify that such information is current and complete. All semiconductor products (also referred to herein as “components”) are sold subject to TI’s terms and conditions of sale supplied at the time of order acknowledgment.

TI warrants performance of its components to the specifications applicable at the time of sale, in accordance with the warranty in TI’s terms and conditions of sale of semiconductor products. Testing and other quality control techniques are used to the extent TI deems necessary to support this warranty. Except where mandated by applicable law, testing of all parameters of each component is not necessarily performed.

TI assumes no liability for applications assistance or the design of Buyers’ products. Buyers are responsible for their products and applications using TI components. To minimize the risks associated with Buyers’ products and applications, Buyers should provide adequate design and operating safeguards.

TI does not warrant or represent that any license, either express or implied, is granted under any patent right, copyright, mask work right, or other intellectual property right relating to any combination, machine, or process in which TI components or services are used. Information published by TI regarding third-party products or services does not constitute a license to use such products or services or a warranty or endorsement thereof. Use of such information may require a license from a third party under the patents or other intellectual property of the third party, or a license from TI under the patents or other intellectual property of TI.

Reproduction of significant portions of TI information in TI data books or data sheets is permissible only if reproduction is without alteration and is accompanied by all associated warranties, conditions, limitations, and notices. TI is not responsible or liable for such altered documentation. Information of third parties may be subject to additional restrictions.

Resale of TI components or services with statements different from or beyond the parameters stated by TI for that component or service voids all express and any implied warranties for the associated TI component or service and is an unfair and deceptive business practice. TI is not responsible or liable for any such statements.

Buyer acknowledges and agrees that it is solely responsible for compliance with all legal, regulatory and safety-related requirements concerning its products, and any use of TI components in its applications, notwithstanding any applications-related information or support that may be provided by TI. Buyer represents and agrees that it has all the necessary expertise to create and implement safeguards which anticipate dangerous consequences of failures, monitor failures and their consequences, lessen the likelihood of failures that might cause harm and take appropriate remedial actions. Buyer will fully indemnify TI and its representatives against any damages arising out of the use of any TI components in safety-critical applications.

In some cases, TI components may be promoted specifically to facilitate safety-related applications. With such components, TI’s goal is to help enable customers to design and create their own end-product solutions that meet applicable functional safety standards and requirements. Nonetheless, such components are subject to these terms.

No TI components are authorized for use in FDA Class III (or similar life-critical medical equipment) unless authorized officers of the parties have executed a special agreement specifically governing such use.

Only those TI components which TI has specifically designated as military grade or “enhanced plastic” are designed and intended for use in military/aerospace applications or environments. Buyer acknowledges and agrees that any military or aerospace use of TI components which have ***not*** been so designated is solely at the Buyer's risk, and that Buyer is solely responsible for compliance with all legal and regulatory requirements in connection with such use.

TI has specifically designated certain components as meeting ISO/TS16949 requirements, mainly for automotive use. In any case of use of non-designated products, TI will not be responsible for any failure to meet ISO/TS16949.

Products		**Applications**	
Audio	www.ti.com/audio	Automotive and Transportation	www.ti.com/automotive
Amplifiers	amplifier.ti.com	Communications and Telecom	www.ti.com/communications
Data Converters	dataconverter.ti.com	Computers and Peripherals	www.ti.com/computers
DLP® Products	www.dlp.com	Consumer Electronics	www.ti.com/consumer-apps
DSP	dsp.ti.com	Energy and Lighting	www.ti.com/energy
Clocks and Timers	www.ti.com/clocks	Industrial	www.ti.com/industrial
Interface	interface.ti.com	Medical	www.ti.com/medical
Logic	logic.ti.com	Security	www.ti.com/security
Power Mgmt	power.ti.com	Space, Avionics and Defense	www.ti.com/space-avionics-defense
Microcontrollers	microcontroller.ti.com	Video and Imaging	www.ti.com/video
RFID	www.ti-rfid.com		
OMAP Applications Processors	www.ti.com/omap	**TI E2E Community**	e2e.ti.com
Wireless Connectivity	www.ti.com/wirelessconnectivity		

Mailing Address: Texas Instruments, Post Office Box 655303, Dallas, Texas 75265
Copyright © 2016, Texas Instruments Incorporated