MWPR1124ZVHT/ MWPR1024IZVHT Data Sheet

Wireless Power Receiver with Integrated Bluetooth® Low Energy Radio

MWPR1124ZVHT
MWPR1024IZVHT

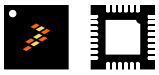

48 LQFN
7 x 7 x 0.98 mm Pitch 0.5 mm

Multi-Standard Radio
- 2.4 GHz Bluetooth Low Energy ver. 4.2 compliant supporting up to 2 simultaneous hardware connections
- Typical Receiver Sensitivity (Bluetooth LE) = -95 dBm
- Prog Transmitter Output Power: -30 dBm to 3.5 dBm
- Low external component counts for low cost application
- On-chip balun with single ended bidirectional RF port

MCU and Memories
- Up to 48 MHz Arm® Cortex-M0+ core
- On-chip 512 KB Flash memory
- On-chip 128 KB SRAM

Low Power Consumption
- Transceiver current (DC-DC buck mode, 3.6 V supply)
  - Typical Rx Current: 6.8 mA
  - Typical Tx current: 6.1 mA (0 dBm output)
- Low Power Mode (VLLS0) Current: 182 nA

Clocks
- 26 and 32 MHz supported for Bluetooth LE
- 32.768 kHz Crystal Oscillator

Operating Characteristics
- Voltage range: 0.9 V to 4.2 V
- Temperature range:
  - –40 to 105 °C (Laminate-QFN)

Human-machine interface
- Touch sensing input
- General-purpose input/output

System peripherals
- Nine MCU low-power modes to provide power optimization based on application requirements
- DC-DC Converter supporting Buck, Boost, and Bypass operating modes
- Direct memory access(DMA) Controller
- Computer operating properly(COP) watchdog
- Serial wire debug(SWD) Interface and Micro Trace buffer
- Bit Manipulation Engine (BME)

Analog Modules
- 16-bit Analog-to-Digital Converter (ADC)
- 12-bit Digital-to-Analog Converter (DAC)
- 6-bit High Speed Analog Comparator (CMP)
- 1.2 V voltage reference (VREF)

Timers
- 16-bit low-power timer (LPTMR)
- 3 Timers Modules(TPM): One 4 channel TPM and two 2 channel TPMs
- Programmable Interrupt Timer (PIT)
- Real-Time Clock (RTC)

Communication interfaces
- 2 serial peripheral interface (SPI) modules
- 2 inter-integrated circuit (I2C) modules
- Low Power UART module
- Carrier Modulator Timer (CMT)

Security
- AES-128 Hardware Accelerator (AESA)
- True Random Number Generator (TRNG)

NXP reserves the right to change the production detail specifications as may be required to permit improvements in the design of its products.

- Advanced flash security
- 80-bit unique identification number per chip
- 40-bit unique media access control (MAC) sub-address
- Bluetooth LE v4.2 Secure Connections

Table of Contents

1 Introduction.... 4
2 Ordering Information.... 5
3 Feature Descriptions.... 5
3.1 Block Diagram....6
3.2 Radio features....6
3.3 Microcontroller features.... 7
3.4 System features.... 8
3.5 Peripheral features....10
3.6 Security Features....15
4 Transceiver Description....16
4.1 Key Specifications....16
4.2 Channel Map Frequency Plans 17
4.2.1 Channel Plan for Bluetooth Low Energy.... 17
4.3 Transceiver Functions....19
5 Transceiver Electrical Characteristics.... 19
5.1 Radio operating conditions.... 19
5.2 Receiver Feature Summary....20
5.3 Transmit and PLL Feature Summary....22
6 System and Power Management.... 25
6.1 Power Management....25
6.1.1 DC-DC Converter....26
6.2 Modes of Operation.... 26
6.2.1 Power modes.... 26
7 MCU Electrical Characteristics....29
7.1 AC electrical characteristics....29
7.2 Nonswitching electrical specifications....29
7.2.1 Voltage and current operating requirements....29
7.2.2 LVD and POR operating requirements.... 30
7.2.3 Voltage and current operating behaviors.... 31
7.2.4 Power mode transition operating behaviors.....32
7.2.5 Power consumption operating behaviors....33
7.2.6 Diagram: Typical IDD_RUN operating behavior.... 41
7.2.7 SoC Power Consumption....42
7.2.8 Designing with radiated emissions in mind..... 43
7.2.9 Capacitance attributes.... 43
7.3 Switching electrical specifications....43
7.3.1 Device clock specifications.... 43
7.3.2 General switching specifications....44
7.4 Thermal specifications.... 45
7.4.1 Thermal operating requirements....45
7.4.2 Thermal attributes.... 45
7.5 Peripheral operating requirements and behaviors.....46
7.5.1 Core modules....46
7.5.2 System modules.... 47
7.5.3 Clock modules.... 48
7.5.4 Memories and memory interfaces....51
7.5.5 Security and integrity modules....53
7.5.6 Analog....53
7.5.7 Timers.... 64
7.5.8 Communication interfaces....64
7.5.9 Human-machine interfaces (HMI).... 69
7.6 DC-DC Converter Operating Requirements.... 70
7.7 Ratings....72
7.7.1 Thermal handling ratings.... 73
7.7.2 Moisture handling ratings....73
7.7.3 ESD handling ratings.... 73
7.7.4 Voltage and current operating ratings....73
8 Pin Diagrams and Pin Assignments....74
8.1 Pinouts....74
8.2 Signal Multiplexing and Pin Assignments.... 75
8.3 Module Signal Description Tables.... 78
8.3.1 Core Modules....78
8.3.2 Radio Modules....79
8.3.3 System Modules.... 80
8.3.4 Clock Modules.... 80
8.3.5 Analog Modules.... 81
8.3.6 Timer Modules.... 82
8.3.7 Communication Interfaces.... 82
8.3.8 Human-Machine Interfaces(HMI)....84
9 Package Information.... 84
9.1 Obtaining package dimensions....84
10 Revision History.... 85

1 Introduction

The MWPR1x24 is a wireless power receiver controller with integrated Bluetooth® Low Energy ver. 4.2 compliant transceiver. The wireless power receiver controller measures the current and voltage of the power output of the wireless power system and transmits the values via Bluetooth LE to wireless power transmitter controller which controls the power transfer.

The key characteristics and features of the system are:

- Enables single or multi-coil power transmitter topology.
- Variable Z-gap range (vertical movement) from 4 mm to 35 mm – depends on coils setup. This range is limited by the 65-W power transfer programable thresholds.
- Modularity in design of power transmitter unit to extend the number of transmitter coils to form a larger active area, which requires:
  - Minor reconfiguration of software.
  - Extension of the multiplexer hardware (coil switches and control signal multiplexer).
  - No major impact on the system topology.
- Fast wireless power transfer start-up time below 2.5 s (applicable for up to seven transmitter coils).
- No power from powered device is needed for the power receiver unit to start-up.
- Support of one Power Class 1 (PC1) device with up to 65 W of PRU output.Premium version support also one Qi-certified Power Class 0 (PC0) device with support for 5-W and 15-W receivers.
- Peak power transfer efficiency (input of power transmitter unit to output of power receiver unit) of over 86 % at the best coil placement and 65 W of power receiver unit output.
- Power receiver unit output-integrated protections for over-power and over-current scenarios.
- Run-time system resonant frequency tracking ranging from 100 kHz to 145 kHz to improve the power-transfer efficiency.
- The power receiver unit power output acts as a constant 19.5-V source, forming an alternative to standard 65-W (or lower) AC power adapters, and thus simplifying its integration into the target system. Output voltage is adjustable.
- Foreign Object Detection during and prior to the power transfer.
- Interface for Bluetooth Low Energy (Bluetooth LE) out-band communication between the power receiver unit and power transmitter unit for secured data and firmware update transfer towards the power transmitter unit.

- The power receiver unit is enabled with authentication devices to ensure that only safe and authentic devices initiate the power transfer in premium version.
- Compliance with the EMC regulation for commercial electronic devices.
- The wireless communication link represents proprietary system which is not opened to the end user.

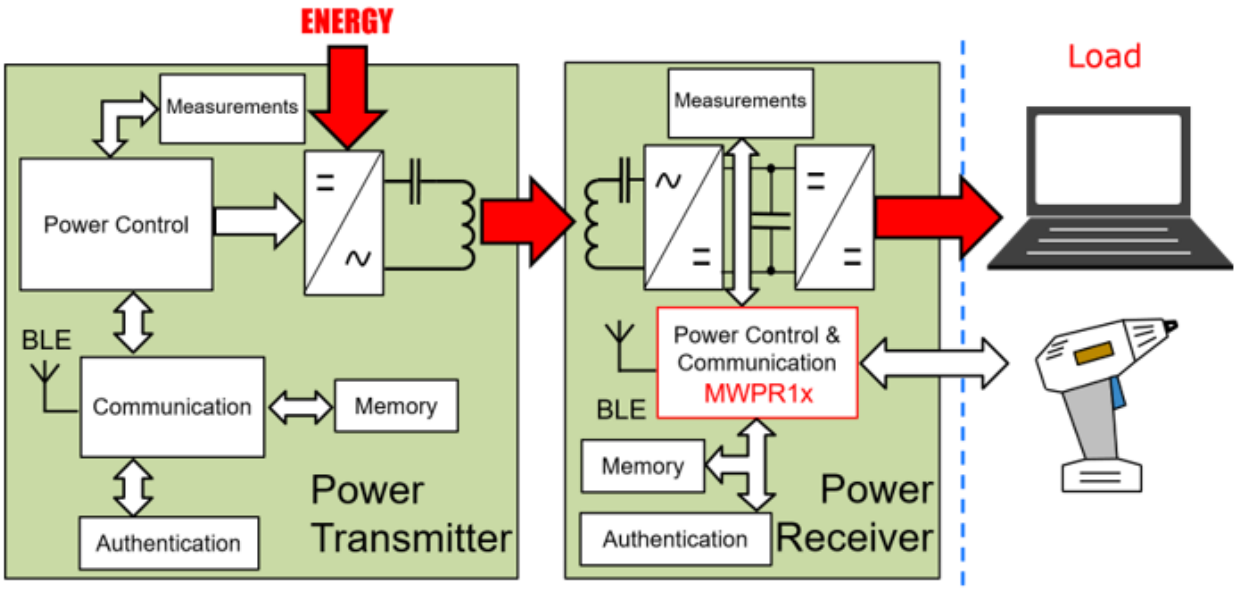

Figure 1. Wireless charging system-functional diagram

2 Ordering Information

Table 1. Orderable parts details

Device	Part Marking	Memory Configuration	Package	Description
MWPR1124ZVHT	MWPR1124	512 KB Flash 128 KB SRAM	48-pin Laminate QFN	Bluetooth Low Energy
MWPR1024IZVHT	MWPR1024	512 KB Flash 128 KB SRAM	48-pin Laminate QFN	Bluetooth Low Energy

3 Feature Descriptions

This section provides a simplified block diagram and highlights the MWPR1124ZVHT/MWPR1024IZVHT features.

3.1 Block Diagram

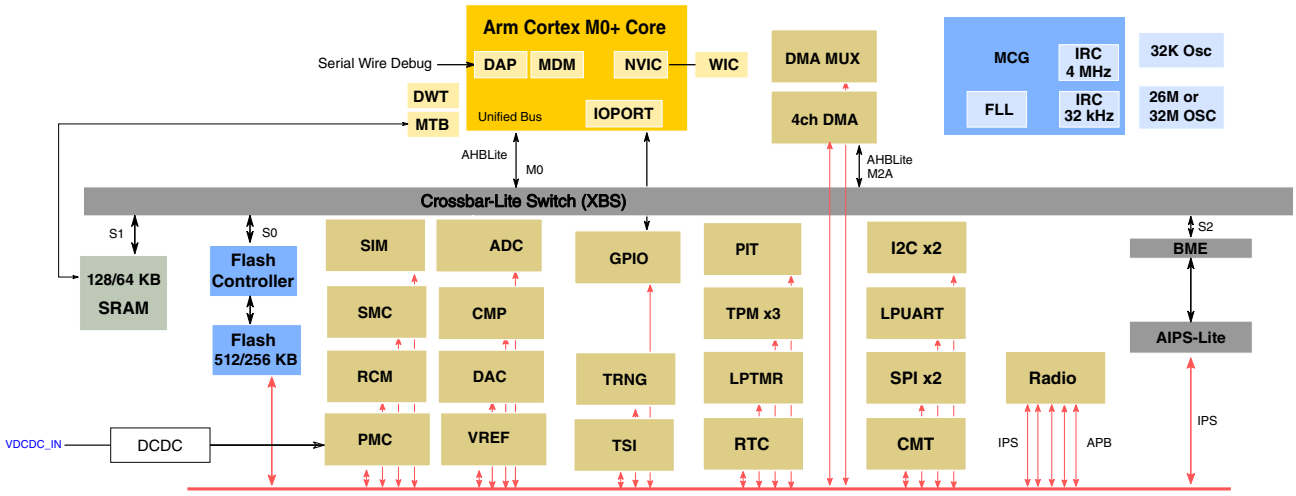

Figure 2. MWPR1x24 Detailed Block Diagram

3.2 Radio features

Operating frequencies:

- 2.4 GHz ISM band (2400-2483.5 MHz)
- MBAN 2360-2400 MHz

Supported standards:

- Bluetooth v4.2 Low Energy compliant 1 Mbps GFSK modulation supporting up to 2 simultaneous connections in hardware (master-slave, master-master, slave-slave)
- Bluetooth Low Energy (Bluetooth LE) Application Profiles

Receiver performance:

- Receive sensitivity of -95 dBm for Bluetooth LE

Other features:

- Programmable transmit output power from -30 dBm to 3.5 dBm
- Integrated on-chip balun
- Single ended bidirectional RF port shared by transmit and receive
- Low external component count
- Supports transceiver range extension using external PA and/or LNA

- 26 and 32 MHz supported for Bluetooth LE
- Bluetooth Low Energy ver. 4.2 Link Layer hardware with 2 independent hardware connection engines

3.3 Microcontroller features

Arm Cortex-M0+ CPU

- Up to 48 MHz CPU
- As compared to Cortex-M0, the Cortex-M0+ uses an optimized 2-stage pipeline microarchitecture for reduced power consumption and improved architectural performance (cycles per instruction)
- Supports up to 32 interrupt request sources
- Binary compatible instruction set architecture with the Cortex-M0 core
- Thumb instruction set combines high code density with 32-bit performance
- Serial Wire Debug (SWD) reduces the number of pins required for debugging
- Micro Trace Buffer (MTB) provides lightweight program trace capabilities using system RAM as the destination memory

Nested Vectored Interrupt Controller (NVIC)

- 32 vectored interrupts, 4 programmable priority levels
- Includes a single non-maskable interrupt

Wake-up Interrupt Controller (WIC)

- Supports interrupt handling when system clocking is disabled in low power modes
- Takes over and emulates the NVIC behavior when correctly primed by the NVIC on entry to very-deep-sleep
- A rudimentary interrupt masking system with no prioritization logic signals for wake-up as soon as a non-masked interrupt is detected

Debug Controller

- Two-wire Serial Wire Debug (SWD) interface
- Hardware breakpoint unit for 2 code addresses
- Hardware watchpoint unit for 2 data items
- Micro Trace Buffer for program tracing

On-Chip Memory

- Up to 512 KB Flash

  - Flash implemented as two equal blocks each of 256 KB block. Code can execute or read from one block while the other block is being erased or programmed.
  - Firmware distribution protection. Program flash can be marked execute-only on a per-sector (8 KB) basis to prevent firmware contents from being read by third parties.
- 128 KB SRAM
- Security circuitry to prevent unauthorized access to RAM and flash contents through the debugger

3.4 System features

Power Management Control Unit (PMC)

- Programmable power saving modes
- Available wake-up from power saving modes via internal and external sources
- Integrated Power-on Reset (POR)
- Integrated Low Voltage Detect (LVD) with reset (brownout) capability
- Selectable LVD trip points
- Programmable Low Voltage Warning (LVW) interrupt capability
- Individual peripheral clocks can be gated off to reduce current consumption
- Internal Buffered bandgap reference voltage
- Factory programmed trim for bandgap and LVD
- 1 kHz Low Power Oscillator (LPO)

DC-DC Converters

- Internal switched mode power supply supporting Buck, Boost, and Bypass operating modes
- Buck operation supports external voltage sources of 2.1 V to 4.2 V. This reduces peak current consumption during Rx and Tx by ~25%, ideal for single coin-cell battery operation (typical CR2032 cell).
- Boost operation supports external voltage sources of 0.9 V to 1.795 V, which is efficiently increased to the static internal core voltage level, ideal for single battery operation (typical AA or AAA alkaline cell).
- When DC-DC is not used, the device supports an external voltage range of 1.5 V to 3.6 V (1.5 - 3.6 V on VDD_RF1, VDD_RF2, VDD_XTAL and VDD_1P5OUT_PMCIN pins. 1.71 - 3.6 V on VDD_0, VDD_1 and VDDA pins)

- An external inductor is required to support the Buck or Boost modes
- The DC-DC Converter 1.8 V output current drive for external devices (MCU in RUN mode, Radio is enabled, other peripherals are disabled)
  - Up to 44 mA in buck mode with VDD_1P8 = 1.8 V
  - Up to 31.4 mA in buck mode with VDD_1P8 = 3.0 V

Direct Memory Access (DMA) Controller

- All data movement via dual-address transfers: read from source, write to destination
- Programmable source and destination addresses and transfer size
- Support for enhanced addressing modes
- 4-channel implementation that performs complex data transfers with minimal intervention from a host processor
- Internal data buffer, used as temporary storage to support 16- and 32-byte transfers
- Connections to the crossbar switch for bus mastering the data movement
- Transfer control descriptor (TCD) organized to support two-deep, nested transfer operations
- 32-byte TCD stored in local memory for each channel
- An inner data transfer loop defined by a minor byte transfer count
- An outer data transfer loop defined by a major iteration count
- Channel activation via one of three methods:
  - Explicit software initiation
  - Initiation via a channel-to-channel linking mechanism for continuous transfers
  - Peripheral-paced hardware requests, one per channel
- Fixed-priority and round-robin channel arbitration
- Channel completion reported via optional interrupt requests
- One interrupt per channel, optionally asserted at completion of major iteration count
- Optional error terminations per channel and logically summed together to form one error interrupt to the interrupt controller
- Optional support for scatter/gather DMA processing
- Support for complex data structures

DMA Channel Multiplexer (DMA MUX)

- 4 independently selectable DMA channel routers
- 2 periodic trigger sources available
- Each channel router can be assigned to 1 of the peripheral DMA sources

COP Watchdog Module

- Independent clock source input (independent from CPU/bus clock)
- Choice between two clock sources
  - LPO oscillator
  - Bus clock

System Clocks

- Both 26 MHz and 32 MHz crystal reference oscillator supported for Bluetooth LE
- 32.768 kHz crystal reference oscillator used to maintain precise Bluetooth radio time in low power modes
- Multipurpose Clock Generator (MCG)
- Internal reference clocks — Can be used as a clock source for other on-chip peripherals
  - On-chip RC oscillator range of 31.25 kHz to 39.0625 kHz with 2% accuracy across full temperature range
  - On-chip 4MHz oscillator with 5% accuracy across full temperature range
- Frequency-locked loop (FLL) controlled by internal or external reference
  - 20 MHz to 48 MHz FLL output

Unique Identifiers

- 10 bytes(or 80-bits) of the Unique ID represents a unique identifier for each chip
- 40 bits of unique media access control (MAC) address, which can be used to build a unique 48-bit Bluetooth LE device address

3.5 Peripheral features

16-bit Analog-to-Digital Converter (ADC)

- Linear successive approximation algorithm with 16-bit resolution
- Output formatted in differential-ended 16-, 13-, 11-, and 9-bit mode
- Output formatted in single-ended 16-, 12-, 10-, and 8-bit mode
- Single or continuous conversion
- Configurable sample time and conversion speed / power
- Conversion rates in 16-bit mode with no averaging up to ~500Ksamples/sec
- Input clock selection
- Operation in low power modes for lower noise operation
- Asynchronous clock source for lower noise operation
- Selectable asynchronous hardware conversion trigger

- Automatic compare with interrupt for less-than, or greater than, or equal to programmable value
- Temperature sensor
- Battery voltage measurement
- Hardware average function
- Selectable voltage reverence
- Self-calibration mode

12-Bit Digital-to-Analog Converter (DAC)

- 12-bit resolution
- Guaranteed 6-sigma monotonicity over input word
- High- and low-speed conversions
  - 1 μs conversion rate for high speed, 2 μs for low speed
- Power-down mode
- Automatic mode allows the DAC to generate its own output waveforms including square, triangle, and sawtooth
- Automatic mode allows programmable period, update rate, and range
- DMA support with configurable watermark level

High-Speed Analog Comparator (CMP)

- 6-bit DAC programmable reference generator output
- Up to eight selectable comparator inputs; each input can be compared with any input by any polarity sequence
- Selectable interrupt on rising edge, falling edge, or either rising or falling edges of comparator output
- Two performance modes:
  - Shorter propagation delay at the expense of higher power
  - Low power, with longer propagation delay
- Operational in all MCU power modes except VLLS0 mode

Voltage Reference(VREF1)

- Programmable trim register with 0.5 mV steps, automatically loaded with factory trimmed value upon reset
- Programmable buffer mode selection:
  - Off
  - Bandgap enabled/standby (output buffer disabled)
  - High power buffer mode (output buffer enabled)
- 1.2 V output at room temperature
- VREF_OUT output signal

Low Power Timer (LPTMR)

- One channel
- Operation as timer or pulse counter
- Selectable clock for prescaler/glitch filter
    - 1 kHz internal LPO
    - External low power crystal oscillator
    - Internal reference clock
- Configurable glitch filter or prescaler
- Interrupt generated on timer compare
- Hardware trigger generated on timer compare
- Functional in all power modes

Timer/PWM (TPM)

- TPM0: 4 channels, TPM1 and TPM2: 2 channels each
- Selectable source clock
- Programmable prescaler
- 16-bit counter supporting free-running or initial/final value, and counting is up or up-down
- Input capture, output compare, and edge-aligned and center-aligned PWM modes
- Input capture and output compare modes
- Generation of hardware triggers
- TPM1 and TPM2: Quadrature decoder with input filters
- Global time base mode shares single time base across multiple TPM instances

Programmable Interrupt Timer (PIT)

- Up to 2 interrupt timers for triggering ADC conversions
- 32-bit counter resolution
- Clocked by bus clock frequency

Real-Time Clock (RTC)

- 32-bit seconds counter with 32-bit alarm
    - Can be invalidated on detection of tamper detect
- 16-bit prescaler with compensation
- Register write protection
    - Hard Lock requires MCU POR to enable write access
    - Soft lock requires POR or software reset to enable write/read access
- Capable of waking up the system from low power modes

Inter-Integrated Circuit (I^2C)

- Two channels
- Compatible with I2C bus standard and SMBus Specification Version 2 features
- Up to 400 kHz operation
- Multi-master operation
- Software programmable for one of 64 different serial clock frequencies
- Programmable slave address and glitch input filter
- Interrupt driven byte-by-byte data transfer
- Arbitration lost interrupt with automatic mode switching from master to slave
- Calling address identification interrupt
- Bus busy detection broadcast and 10-bit address extension
- Address matching causes wake-up when processor is in low power mode

LPUART

- One channel
- Full-duplex operation
- Standard mark/space non-return-to-zero (NRZ) format
- 13-bit baud rate selection with fractional divide of 32
- Programmable 8-bit or 9-bit data format
- Programmable 1 or 2 stop bits
- Separately enabled transmitter and receiver
- Programmable transmitter output polarity
- Programmable receive input polarity
- 13-bit break character option
- 11-bit break character detection option
- Two receiver wakeup methods:
    - Idle line wakeup
    - Address mark wakeup
- Address match feature in receiver to reduce address mark wakeup ISR overhead
- Interrupt or DMA driven operation
- Receiver framing error detection
- Hardware parity generation and checking
- Configurable oversampling ratio to support from 1/4 to 1/32 bit-time noise detection
- Operation in low power modes
- Hardware Flow Control RTS\CTS
- Functional in Stop/VLPS modes

Serial Peripheral Interface (SPI)

- Two independent SPI channels
- Master and slave mode

- Full-duplex, three-wire synchronous transfers
- Programmable transmit bit rate
- Double-buffered transmit and receive data registers
- Serial clock phase and polarity options
- Slave select output
- Control of SPI operation during wait mode
- Selectable MSB-first or LSB-first shifting
- Support for both transmit and receive by DMA

Carrier Modulator Timer (CMT)

- Four modes of operation
  - Time; with independent control of high and low times
  - Baseband
  - Frequency shift key (FSK)
  - Direct software control of CMT_IRO signal
- Extended space operation in time, baseband, and FSK modes
- Selectable input clock divider
- Interrupt on end of cycle
- Ability to disable CMT_IRO signal and use as timer interrupt

General Purpose Input/Output (GPIO)

- Hysteresis and configurable pull up device on all input pins
- Independent pin value register to read logic level on digital pin
- All GPIO pins can generate IRQ and wakeup events
- Configurable drive strength on some output pins

Touch Sensor Input (TSI)

- Support up to 16 external electrodes
- Automatic detection of electrode capacitance across all operational power modes
- Internal reference oscillator for high-accuracy measurement
- Configurable software or hardware scan trigger
- Capability to wake MCU from low power modes
- Compensate for temperature and supply voltage variations
- High sensitivity change with 16-bit resolution register
- Configurable up to 4096 scan times
- Support DMA data transfer

Keyboard Interface

- GPIO can be configured to function as a interrupt driven keyboard scanning matrix

- In the 48-pin package there are a total of 26 digital pins
- These pins can be configured as needed by the application as GPIO, LPUART, SPI, I2C, ADC, timer I/O as well as other functions

3.6 Security Features

Advanced Encryption Standard Accelerator(AES-128 Accelerator)

The advanced encryption standard accelerator (AESA) module is a standalone hardware coprocessor capable of accelerating the 128-bit advanced encryption standard (AES) cryptographic algorithms.

The AESA engine supports the following cryptographic features.

LTC includes the following features:

- Cryptographic authentication
  - Message authentication codes (MAC)
    - Cipher-based MAC (AES-CMAC)
    - Extended cipher block chaining message authentication code (AES-XCBC-MAC)
  - Auto padding
  - Integrity Check Value(ICV) checking
- Authenticated encryption algorithms
  - Counter with CBC-MAC (AES-CCM)
  - Galois counter mode (AES-GCM)
- Symmetric key block ciphers
  - AES (128-bit keys)
  - Cipher modes:
    - AES-128 modes
      - Electronic codebook (ECB)
      - Cipher block chaining (CBC)
      - Counter (CTR)
    - DES modes
      - Electronic codebook (ECB)
      - Cipher block chaining (CBC)
      - Cipher feedback (CFB)
      - Output Feedback (OFB)
- Secure scan

True Random Number Generator (TRNG)

True Random Number Generator (TRNG) is a hardware accelerator module that constitutes a high-quality entropy source.

- TRNG generates a 512-bit (4x 128-bit) entropy as needed by an entropy-consuming module, such as a deterministic random number generator.
- TRNG output can be read and used by a deterministic pseudo-random number generator (PRNG) implemented in software.
- TRNG-PRNG combination achieves NIST compliant true randomness and cryptographic-strength random numbers using the TRNG output as the entropy source.
- A fully FIPS 180 compliant solution can be realized using the TRNG together with a FIPS compliant deterministic random number generator and the SoC-level security.

Flash Memory Protection

The on-chip flash memory controller enables the following useful features:

- Program flash protection scheme prevents accidental program or erase of stored data.
- Program flash access control scheme prevents unauthorized access to selected code segments.
- The flash can be protected from mass erase even when the MCU is not secured.
- Automated, built-in, program and erase algorithms with verify.
- Read access to one program flash block is possible while programming or erasing data in the other program flash block.

4 Transceiver Description

- Direct Conversion Receiver
- Constant Envelope Transmitter
- 2.36 GHz to 2.483 GHz PLL Range
- Low Transmit and Receive Current Consumption
- Low BOM

4.1 Key Specifications

The MWPR1x24 SoC meets or exceeds all Bluetooth Low Energy v4.2 performance specifications applicable to 2.4 GHz ISM and MBAN (Medical Band Area Network) bands. Key specification for the MWPR1x24 are:

Frequency Band:

- ISM Band: 2400 to 2483.5MHz
- MBAN Band: 2360 to 2400MHz

Bluetooth Low Energy v4.2 modulation scheme:

- Symbol rate: 1000 kbps
- Modulation: GFSK
- Receiver sensitivity: -95 dBm, typical
- Programmable transmitter output power: -30 dBm to 3.5 dBm

4.2 Channel Map Frequency Plans

4.2.1 Channel Plan for Bluetooth Low Energy

This section describes the frequency plan / channels associated with 2.4GHz ISM and MBAN bands for Bluetooth Low Energy.

2.4 GHz ISM Channel numbering:

- Fc=2402 + k * 2 MHz, k=0,.....,39.

MBAN Channel numbering:

- Fc=2363 + 5*k in MHz, for k=0,.....,6
- Fc=2367 + 5*(k-7) in MHz, for k=7,8.....,13)

where k is the channel number.

Table 2. 2.4 GHz ISM and MBAN frequency plan and channel designations

2.4 GHz ISM[1]		MBAN[2]		2.4GHz ISM + MBAN	
Channel	Freq (MHz)	Channel	Freq (MHz)	Channel	Freq (MHz)
0	2402	0	2360	28	2390
1	2404	1	2361	29	2391

Table continues on the next page...

Table 2. 2.4 GHz ISM and MBAN frequency plan and channel designations (continued)

2.4 GHz ISM[1]		MBAN[2]		2.4GHz ISM + MBAN	
Channel	Freq (MHz)	Channel	Freq (MHz)	Channel	Freq (MHz)
2	2406	2	2362	30	2392
3	2408	3	2363	31	2393
4	2410	4	2364	32	2394
5	2412	5	2365	33	2395
6	2414	6	2366	34	2396
7	2416	7	2367	35	2397
8	2418	8	2368	36	2398
9	2420	9	2369	0	2402
10	2422	10	2370	1	2404
11	2424	11	2371	2	2406
12	2426	12	2372	3	2408
13	2428	13	2373	4	2410
14	2430	14	2374	5	2412
15	2432	15	2375	6	2414
16	2434	16	2376	7	2416
17	2436	17	2377	8	2418
18	2438	18	2378	9	2420
19	2440	19	2379	10	2422
20	2442	20	2380	11	2424
21	2444	21	2381	12	2426
22	2446	22	2382	13	2428
23	2448	23	2383	14	2430
24	2450	24	2384	15	2432
25	2452	25	2385	16	2434
26	2454	26	2386	17	2436
27	2456	27	2387	18	2438
28	2458	28	2388	19	2440
29	2460	29	2389	20	2442
30	2462	30	2390	21	2444
31	2464	31	2391	22	2446
32	2466	32	2392	23	2448
33	2468	33	2393	24	2450
34	2470	34	2394	25	2452
35	2472	35	2395	26	2454
36	2474	36	2396	27	2456
37	2476	37	2397	37	2476
38	2478	38	2398	38	2478

Table continues on the next page...

Table 2. 2.4 GHz ISM and MBAN frequency plan and channel designations (continued)

2.4 GHz ISM[1]		MBAN[2]		2.4GHz ISM + MBAN	
Channel	Freq (MHz)	Channel	Freq (MHz)	Channel	Freq (MHz)
39	2480	39	2399	39	2480

1. ISM frequency of operation spans from 2400.0 MHz to 2483.5 MHz
2. Per FCC guideline rules, Bluetooth Low Energy single mode operation is allowed in these channels.

4.3 Transceiver Functions

Receive

The receiver architecture is Zero IF (ZIF) where the received signal after passing through RF front end is down-converted to a baseband signal. The signal is filtered and amplified before it is fed to analog-to-digital converter. The digital signal is then decimated to a baseband clock frequency before it is digitally processed, demodulated and passed on to packet processing/link-layer processing.

Transmit

The transmitter transmits O-QPSK or GFSK/FSK modulation having power and channel selection adjustment per user application. After the channel of operation is determined, coarse and fine tuning is executed within the Frac-N PLL to engage signal lock. After signal lock is established, the modulated buffered signal is then routed to a multi-stage amplifier for transmission. The differential signals at the output of the PA (RF_P, RF_N) are converted to a single ended(SE) output signal by an on-chip balun.

5 Transceiver Electrical Characteristics

5.1 Radio operating conditions

Table 3. Radio operating conditions

Characteristic	Symbol	Min	Typ	Max	Unit
Input Frequency	f_{in}	2.360	—	2.480	GHz

Table continues on the next page...

Table 3. Radio operating conditions (continued)

Characteristic	Symbol	Min	Typ	Max	Unit
Ambient Temperature Range	T_A	-40	25	105	°C
Logic Input Voltage Low	V_{IL}	0	—	30% VDD_{INT} [1]	V
Logic Input Voltage High	V_{IH}	70% VDD_{INT}	—	VDD_{INT}	V
SPI Clock Rate	f_{SPI}	—	—	12.0	MHz
RF Input Power	P_{max}	—	—	10	dBm
Crystal Reference Oscillator Frequency(±40 ppm over operating conditions)	f_{ref}	26 MHz or 32 MHz			

1. VDD_{INT} is the internal LDO regulated voltage supplying various circuit blocks, VDD_{INT}=1.2 V

5.2 Receiver Feature Summary

Table 4. Top Level Receiver Specifications (TA=25°C, nominal process unless otherwise noted)

Characteristic[1]	Symbol	Min.	Typ.	Max.	Unit
Supply current power down on VDD_RFx supplies	I_{pdn}	—	200	1000	nA
Supply current Rx On with DC-DC converter enable (Buck; VDD_{DCDC_in} = 3.6 V) [,2]	I_{Rxon}	—	6.76	—	mA
Supply current Rx On with DC-DC converter disabled (Bypass) [2]	I_{Rxon}	—	16.2	—	mA
Input RF Frequency	f_{in}	2.360	—	2.4835	GHz
GFSK Rx Sensitivity(250 kbps GFSK-BT=0.5, h=0.5)	$SENS_{GFSK}$	—	-100	—	dBm
Bluetooth LE Rx Sensitivity [3]	$SENS_{Bluetooth\ LE}$	—	-95	—	dBm
Noise Figure for max gain mode @ typical sensitivity	NF_{HG}	—	7.5	—	dB
Receiver Signal Strength Indicator Range[4]	$RSSI_{Range}$	-100	—	5	dBm
Receiver Signal Strength Indicator Resolution	$RSSI_{Res}$	—	1	—	dBm
Typical RSSI variation over frequency		-2	—	2	dB
Typical RSSI variation over temperature		-2	—	2	dB
Narrowband RSSI accuracy[5]	$RSSI_{Acc}$	-3	—	3	dB
Bluetooth LE Co-channel Interference (Wanted signal at -67 dBm , BER <0.1%. Measurement resolution 1 MHz).	Bluetooth $LE_{co\text{-}channel}$		-7		dB
Adjacent/Alternate Channel Performance[6]					
Bluetooth LE Adjacent +/- 1 MHz Interference offset (Wanted signal at -67 dBm , BER <0.1%. Measurement resolution 1 MHz.)	$SEL_{Bluetooth\ LE,\ 1\ MHz}$	—	2	—	dB

Table continues on the next page...

Table 4. Top Level Receiver Specifications (TA=25°C, nominal process unless otherwise noted) (continued)

Characteristic[1]	Symbol	Min.	Typ.	Max.	Unit
Bluetooth LE Adjacent +/- 2 MHz Interference offset (Wanted signal at -67 dBm , BER <0.1%. Measurement resolution 1 MHz.)	$SEL_{Bluetooth\ LE,\ 2\ MHz}$	—	40	—	dB
Bluetooth LE Alternate ≥ +/-3 MHz Interference offset (Wanted signal at -67 dBm, BER <0.1%. Measurement resolution 1 MHz.)	$SEL_{Bluetooth\ LE,\ 3\ MHz}$	—	50	—	dB
Intermodulation Performance					
Bluetooth LE Intermodulation with continuous wave interferer at ± 3MHz and modulated interferer is at ± 6MHz (Wanted signal at -67 dBm , BER<0.1%.)		—	-42	—	dBm
Bluetooth LE Intermodulation with continuous wave interferer at ±5MHz and modulated interferer is at ±10MHz (Wanted signal at -67 dBm , BER<0.1%.)		—	-35	—	dBm
Blocking Performance[6]					
Bluetooth LE Out of band blocking from 30 MHz to 1000 MHz and 4000 MHz to 5000 MHz (Wanted signal at -67 dBm , BER<0.1%. Interferer continuous wave signal.)[7]	—	—	-5	—	dBm
Bluetooth LE Out of band blocking from 1000 MHz to 2000 MHz and 3000 MHz to 4000MHz (Wanted signal at -67 dBm , BER<0.1%. Interferer continuous wave signal.)	—	—	-12	—	dBm
Bluetooth LE Out of band blocking from 2001 MHz to 2339MHz and 2484 MHz to 2999 MHz (Wanted signal at -67 dBm , BER<0.1%. Interferer continuous wave signal.)	—	—	-20	—	dBm
Bluetooth LE Out of band blocking from 5000 MHz to 12750 MHz (Wanted signal at -67 dBm , BER<0.1%. Interferer continuous wave signal.)[7]	—	—	0	—	dBm
Spurious Emission < 1.6 MHz offset (Measured with 100 kHz resolution and average detector. Device transmit on RF channel with center frequency fc and spurious power measured in 1 MHz at RF frequency f), where |f-fc|< 1.6 MHz	—	—	-54	—	dBc
Spurious Emission > 2.5 MHz offset (Measured with 100 kHz resolution and average detector. Device transmit on RF channel with center frequency fc and spurious power measured in 1 MHz at RF frequency f), where |f-fc|> 2.5 MHz[8]	—	—	-70	—	dBc

1. All the RX parameters are measured at the MWPR1x24 RF pins
2. Transceiver power consumption
3. Measured at 0.1% BER using 37 byte long packets in max gain mode and nominal conditions
4. RSSI performance in narrowband mode
5. With one point calibration over frequency and temperature
6. Bluetooth LE Adjacent and Block parameters are measured with modulated interference signals
7. Exceptions allowed for carrier frequency harmonics.
8. Exceptions allowed for twice the reference clock frequency(fref) multiples.

Table 5. Receiver Specifications with Generic FSK Modulations

				Adjacent/Alternate Channel Selectivity (dB)[1]					
Modulation Type	Data Rate (kbps)	Channel BW (kHz)	Typical Sensitivity (dBm)	Desired signal level (dBm)	Interferer at -/+1* channel BW offset	Interferer at -/+ 2* channel BW offset	Interferer at -/+ 3* channel BW offset	Interferer at -/+ 4* channel BW offset	Co-channel
GFSK BT = 0.5, h=0.5	1000	2000	-95	-67	45	50	52	52	-7
	500	1000	-97	-85	33	44	49	51	-7
	250	500	-100	-85	20	33	42	46	-7
GFSK, BT = 0.5, h=0.3	1000	1000	-89	-67	30	36	41	42	-7
	500	800	-91	-85	25	36	37	43	-13
	250	500	-93	-85	25	25	37	37	-13
GFSK, BT = 0.5, h=0.7	1000	2000	-96	-85	35	45	50	55	-7
	500	1000	-98	-85	32	44	47	50	-7
	250	600	-99	-85	30	34	46	45	-7
GMSK BT=0.3	1000	1600	-91	-85	35	40	45	50	-8
	500	800	-93	-85	30	40	40	45	-7
	250	500	-95	-85	20	32	32	40	-7
GMSK, BT = 0.7	1000	2000	-96	-85	35	45	50	55	-7
	500	1000	-97	-85	30	45	48	50	-7
	250	600	-99	-85	30	33	45	45	-7
Generic MSK	1000	3000	-96	-85	39	50	58	63	-7
	500	1600	-98	-85	38	47	50	55	-7
	250	800	-99	-85	30	46	45	50	-7

1. Selectivity measured with an unmodulated blocker

5.3 Transmit and PLL Feature Summary

- Supports constant envelope modulation of 2.4 GHz ISM and 2.36 GHz MBAN frequency bands
- Fast PLL Lock time: < 25 µs
- Reference Frequency:
  - 26 and 32 MHz supported for Bluetooth LE

Table 6. Top level Transmitter Specifications (TA=25°C, nominal process unless otherwise noted)

Characteristic[1]	Symbol	Min.	Typ.	Max.	Unit
Supply current power down on VDD_RFx supplies	I_{pdn}	—	200	—	nA

Table continues on the next page...

Table 6. Top level Transmitter Specifications (TA=25°C, nominal process unless otherwise noted) (continued)

Characteristic[1]	Symbol	Min.	Typ.	Max.	Unit
Supply current Tx On with P_{RF} = 0dBm and DC-DC converter enabled (Buck; VDD_{DCDC_in} = 3.6 V) [2]	I_{Txone}	—	6.08	—	mA
Supply current Tx On with P_{RF} = 0 dBm and DC-DC converter disabled (Bypass) [2]	I_{Txond}	—	14.7	—	mA
Output Frequency	f_c	2.360	—	2.4835	GHz
Maximum RF Output power [3]	$P_{RF,max}$	—	3.5	—	dBm
Minimum RF Output power [3]	$P_{RF,min}$	—	-30	—	dBm
RF Output power control range	P_{RFCR}	—	34	—	dB
Bluetooth LE TX Output Spectrum 20dB BW	$TXBW_{Bluetooth\ LE}$	1.0		—	MHz
Bluetooth LE average frequency deviation using a 00001111 modulation sequence	$\Delta f1_{avg,Bluetooth\ LE}$		250		kHz
Bluetooth LE average frequency deviation using a 01010101 modulation sequence	$\Delta f2_{avg,Bluetooth\ LE}$		220		kHz
Bluetooth LE RMS FSK Error	$FSK_{err,Bluetooth\ LE}$		3%		
Bluetooth LE Maximum Deviation of the Center Frequency[4]	$F_{cdev,Bluetooth\ LE}$	—	±10	—	kHz
Bluetooth LE Adjacent Channel Transmit Power at 2MHz offset[5]	$P_{RF2MHz,Bluetooth\ LE}$	—	—	-50	dBm
Bluetooth LE Adjacent Channel Transmit Power at >= 3MHz offset[5]	$P_{RF3MHz,\ Bluetooth\ LE}$	—	—	-55	dBm
Bluetooth LE Frequency Hopping Support			YES		
2nd Harmonic of Transmit Carrier Frequency (Pout = PRF,max)[6]	TXH2	—	-46	—	dBm/MHz
3rd Harmonic of Transmit Carrier Frequency (Pout = PRF,max)[6]	TXH3	—	-58	—	dBm/MHz

1. All the TX parameters are measured at test hardware SMA connector
2. Transceiver power consumption
3. Measured at the MWPR1x24 RF pins
4. Maximum drift of carrier frequency of the PLL during a Bluetooth LE packet with a nominal 32MHz reference crystal
5. Measured at Pout = 5dBm and recommended TX match
6. Harmonic Levels based on recommended 2 component match. Transmit harmonic levels depend on the tolerances and quality of the matching components.

Transmit PA driver output as a function of the PA_POWER[5:0] field when measured at the IC pins is as follows:

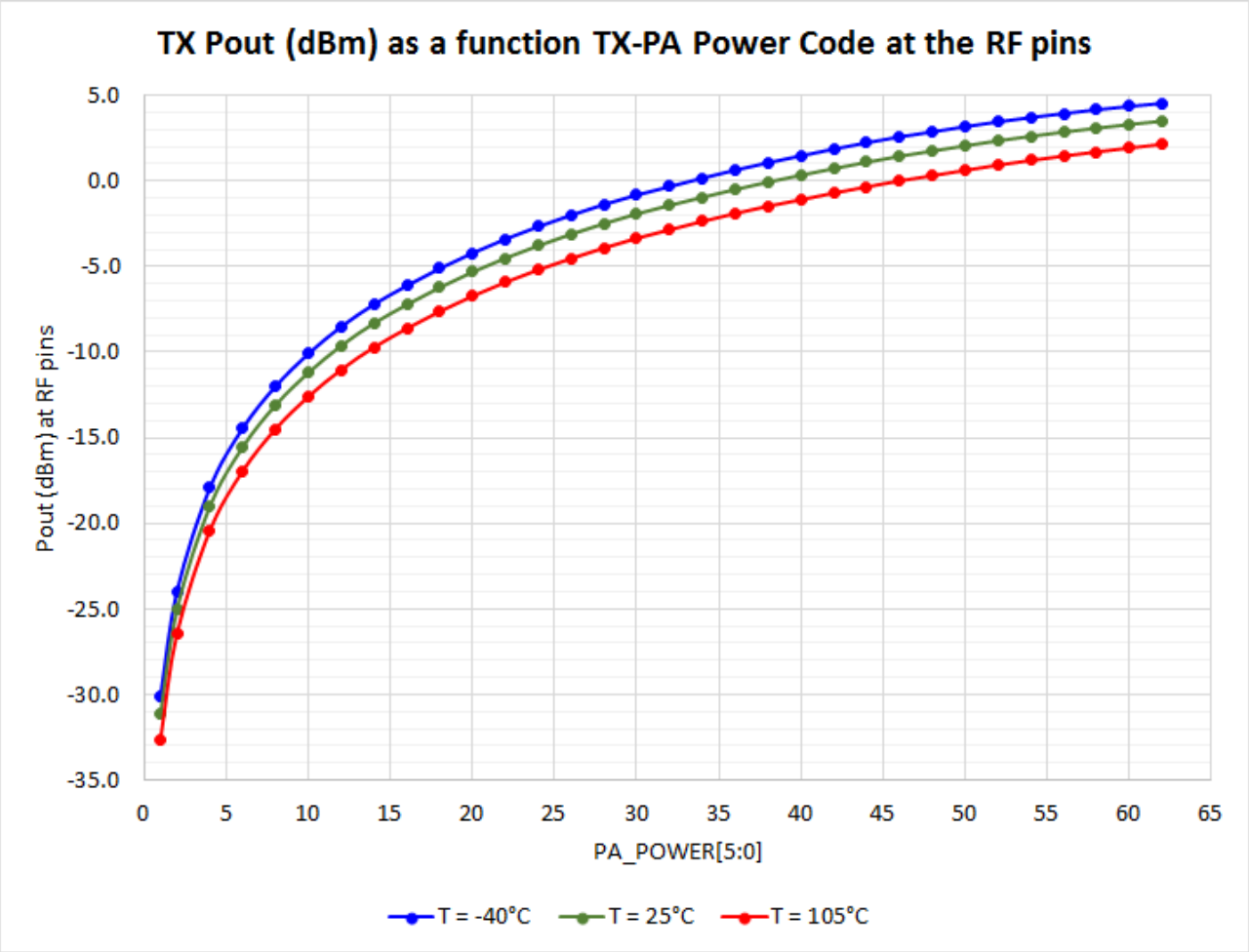

Table 7. Transmit Output Power as a function of PA_POWER[5:0]

	TX Pout (dBm)		
PA_POWER[5:0]	**T = -40 °C**	**T = 25 °C**	**T = 105 °C**
1	-30.1	-31.1	-32.6
2	-24.0	-25.0	-26.4
4	-17.9	-19.0	-20.4
6	-14.5	-15.6	-17.0
8	-12.0	-13.1	-14.5
10	-10.1	-11.2	-12.6
12	-8.5	-9.6	-11.0
14	-7.2	-8.3	-9.7
16	-6.1	-7.2	-8.6

Table continues on the next page...

Table 7. Transmit Output Power as a function of PA_POWER[5:0] (continued)

	TX Pout (dBm)		
PA_POWER[5:0]	T = -40 °C	T = 25 °C	T = 105 °C
18	-5.1	-6.2	-7.6
20	-4.2	-5.3	-6.7
22	-3.4	-4.5	-5.9
24	-2.7	-3.8	-5.2
26	-2.0	-3.1	-4.5
28	-1.4	-2.5	-3.9
30	-0.8	-1.9	-3.3
32	-0.3	-1.4	-2.8
34	0.2	-1.0	-2.4
36	0.6	-0.5	-1.9
38	1.1	-0.1	-1.5
40	1.5	0.3	-1.1
42	1.9	0.7	-0.7
44	2.2	1.1	-0.3
46	2.6	1.4	0.0
48	2.9	1.8	0.3
50	3.2	2.1	0.6
52	3.5	2.4	0.9
54	3.7	2.6	1.2
56	3.9	2.9	1.5
58	4.2	3.1	1.7
60	4.4	3.3	1.9
62	4.5	3.5	2.1

6 System and Power Management

6.1 Power Management

The MWPR1x24 includes internal power management features that can be used to control the power usage. The power management of the MWPR1x24 includes power management controller (PMC) and a DC-DC converter which can operate in a buck, boost or bypass configuration. The PMC is designed such that the RF radio will

remain in state-retention while the core is in various stop modes. It can make sure the device can stay in low current consumption mode while the RF radio can wakeup quick enough for communication.

6.1.1 DC-DC Converter

The features of the DC-DC converter include the following:

- Single inductor, multiple outputs.
- Boost mode (pin selectable; CFG=GND).
- Buck mode (pin selectable; CFG=VDCDC_IN).
- Continuous or pulsed operation (hardware/software configurable).
- Power switch input to allow external control of power up, and to select bypass mode.
- Output signal to indicate power stable. Purpose is for the rest of the chip to be used as a POR.
- Scaled battery output voltage suitable for SAR ADC utilization.
- Internal oscillator for support when the reference oscillator is not present.
- 1.8 V output is capable of supplying the external device a maximum of 38.9 mA (VDD_1P8OUT = 1.8 V, VDCDC_IN = 3.0 V) and 20.9 mA (VDD_1P8OUT = 3.0 V, VDCDC_IN = 3.0 V), with MCU in RUN mode, peripherals are disabled.

6.2 Modes of Operation

The Arm Cortex-M0+ core in the MWPR1x24 has three primary modes of operation: Run, Wait, and Stop modes. For each run mode, there is a corresponding wait and stop mode. Wait modes are similar to Arm sleep modes. Stop modes are similar to Arm deep sleep modes. The very low power run (VLPR) operation mode can drastically reduce runtime power when the maximum bus frequency is not required to handle the application needs.

The WFI instruction invokes both wait and stop modes. The primary modes are augmented in a number of ways to provide lower power based on application needs.

6.2.1 Power modes

The power management controller (PMC) provides multiple power options to allow the user to optimize power consumption for the level of functionality needed.

Depending on the stop requirements of the user application, a variety of stop modes are available that provide state retention, partial power down or full power down of certain logic and/or memory. I/O states are held in all modes of operation. The following table compares the various power modes available.

For each run mode there is a corresponding wait and stop mode. Wait modes are similar to Arm sleep modes. Stop modes (VLPS, STOP) are similar to Arm sleep deep mode. The very low power run (VLPR) operating mode can drastically reduce runtime power when the maximum bus frequency is not required to handle the application needs.

The three primary modes of operation are run, wait and stop. The WFI instruction invokes either wait or stop depending on the SLEEPDEEP bit in Cortex-M0+ System Control Register. The primary modes are augmented in a number of ways to provide lower power based on application needs.

Table 8. Power modes (At 25 deg C)

Power mode	Description	CPU recovery method	Radio
Normal Run (all peripherals clock off)	Allows maximum performance of chip.	—	Radio can be active
Normal Wait - via WFI	Allows peripherals to function, while allowing CPU to go to sleep reducing power.	Interrupt	
Normal Stop - via WFI	Places chip in static state. Lowest power mode that retains all registers while maintaining LVD protection.	Interrupt	
PStop2 (Partial Stop 2)	Core and system clocks are gated. Bus clock remains active. Masters and slaves clocked by bus clock remain in Run or VLPRun mode. The clock generators in MCG and the on-chip regulator in the PMC also remain in Run or VLPRun mode.	Interrupt	
PStop1 (Partial Stop 1)	Core, system clocks and bus clock are gated. All bus masters and slaves enter Stop mode. The clock generators in MCG and the on-chip regulator in the PMC also remain in Run or VLPRun mode.	Interrupt	
VLPR (Very Low Power Run) (all peripherals off)	Reduced frequency (1MHz) Flash access mode, regulator in low power mode, LVD off. Internal oscillator can provide low power 4 MHz source for core. (Values @2MHz core/ 1MHz bus and flash, module off, execution from flash). Biasing is disabled when DC-DC is configured for continuous mode in VLPR/W	—	Radio operation is possible only when DC-DC is configured for continuous mode.[1] However, there may be insufficient MIPS with a 4MHz MCU to support much in the way of radio operation.
VLPW (Very Low Power Wait) - via WFI (all peripherals off)	Similar to VLPR, with CPU in sleep to further reduce power. (Values @4MHz core/ 1MHz bus, module off)	Interrupt	

Table continues on the next page...

Table 8. Power modes (At 25 deg C) (continued)

Power mode	Description	CPU recovery method	Radio
	Biasing is disabled when DC-DC is configured for continous mode in VLPR/W		
VLPS (Very Low Power Stop) via WFI	Places MCU in static state with LVD operation off. Lowest power mode with ADC and all pin interrupts functional. LPTMR, RTC, CMP, TSI can be operational. Biasing is disabled when DC-DC is configured for continuous mode in VLPS	Interrupt	
LLS3 (Low Leakage Stop)	State retention power mode. LLWU, LPTMR, RTC, CMP, TSI can be operational. All of the radio Sea of Gates (SOG) logic is in state retention	Wakeup Interrupt	Radio SOG is in state retention in LLSx. The Bluetooth LElogic can be active using the 32 kHz clock
LLS2 (Low Leakage Stop)	State retention power mode. LLWU, LPTMR, RTC, CMP, TSI can be operational. 16 KB or 32 KB of programmable RAM can be powered on. All of the radio SOG logic is in state retention	Wakeup Interrupt	
VLLS3 (Very Low Leakage Stop3)	Full SRAM retention. LLWU, LPTMR, RTC, CMP, TSI can be operational. All of the radio SOG logic is in state retention.	Wakeup Reset	Radio SOG is in state retention in VLLS3/2. The Bluetooth LE logic can be active using the 32 kHz clock.
VLLS2 (Very Low Leakage Stop2)	Partial SRAM retention. 16 KB or 32 KB of programmable RAM can be powered on. LLWU, LPTMR, RTC, CMP, TSI can be operational. All of the radio SOG logic is in state retention.	Wakeup Reset	
VLLS1 (Very Low Leakage Stop1) with RTC + 32 kHz OSC	All SRAM powered off. The 32-byte system register file remains powered for customer-critical data. LLWU, LPTMR, RTC, CMP can be operational. Radio logic is power gated.	Wakeup Reset	Radio operation not supported. The Radio SOG is power-gated in VLLS1/0. Radio state is lost at VLLS1 and lower power states
VLLS1 (Very Low Leakage Stop1) with LPTMR + LPO	All SRAM powered off. The 32-byte system register file remains powered for customer-critical data. LLWU, LPTMR, RTC, CMP, TSI can be operational.	Wakeup Reset	
VLLS0 (Very Low Leakage Stop0) with Brown-out Detection	VLLS0 is not supported with DC-DC The 32-byte system register file remains powered for customer-critical data. Disable all analog modules in PMC and retains I/O state and DGO state. LPO disabled, POR brown-out detection enabled, Pin interrupt only. Radio logic is power gated.	Wakeup Reset	Radio operation not supported. The Radio digital is power-gated in VLLS1/0
VLLS0 (Very Low Leakage Stop0) without Brown-out Detection	VLLS0 is not supported with DC-DC buck/boost configuration but is supported with bypass configuration The 32-byte system register file remains powered for customer-critical data. Disable all analog modules in PMC and retains I/O state and DGO state. LPO disabled, POR brown-out detection disabled, Pin interrupt only. Radio logic is power gated.	Wakeup Reset	

1. Biasing is disabled, but the flash is in a low power mode for VLPx, so this configuration can realize some power savings over use of Run/Wait/Stop

7 MCU Electrical Characteristics

7.1 AC electrical characteristics

Unless otherwise specified, propagation delays are measured from the 50% to the 50% point, and rise and fall times are measured at the 20% and 80% points, as shown in the following figure.

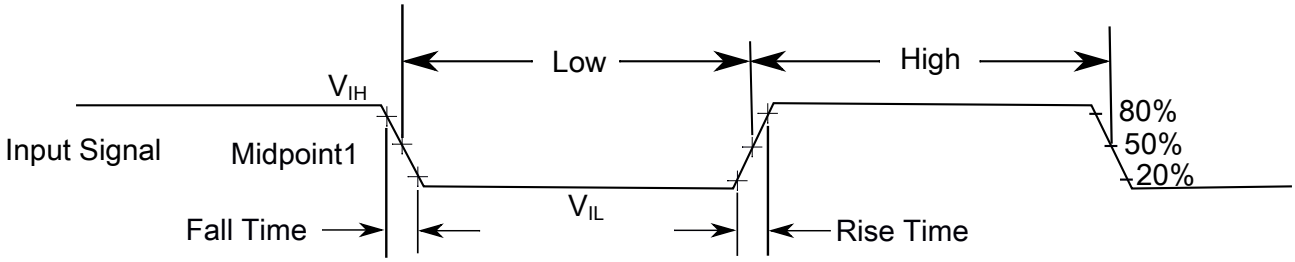

The midpoint is $V_{IL} + (V_{IH} - V_{IL}) / 2$

Figure 3. Input signal measurement reference

All digital I/O switching characteristics, unless otherwise specified, assume that the output pins have the following characteristics.

- C_L=30 pF loads
- Slew rate disabled
- Normal drive strength

7.2 Nonswitching electrical specifications

7.2.1 Voltage and current operating requirements

Table 9. Voltage and current operating requirements

Symbol	Description	Min.	Max.	Unit	Notes
V_{DD}	Supply voltage	1.71	3.6	V	
V_{DDA}	Analog supply voltage	1.71	3.6	V	

Table continues on the next page...

Table 9. Voltage and current operating requirements (continued)

Symbol	Description	Min.	Max.	Unit	Notes
$V_{DD} – V_{DDA}$	V_{DD}-to-V_{DDA} differential voltage	–0.1	0.1	V	
$V_{SS} – V_{SSA}$	V_{SS}-to-V_{SSA} differential voltage	–0.1	0.1	V	
V_{IH}	Input high voltage • 2.7 V ≤ V_{DD} ≤ 3.6 V • 1.7 V ≤ V_{DD} ≤ 2.7 V	 0.7 × V_{DD} 0.75 × V_{DD}	 — —	 V V	
V_{IL}	Input low voltage • 2.7 V ≤ V_{DD} ≤ 3.6 V • 1.7 V ≤ V_{DD} ≤ 2.7 V	 — —	 0.35 × V_{DD} 0.3 × V_{DD}	 V V	
V_{HYS}	Input hysteresis	0.06 × V_{DD}	—	V	
I_{ICIO}	IO pin negative DC injection current — single pin • V_{IN} < V_{SS}-0.3V	-3	—	mA	1
I_{ICcont}	Contiguous pin DC injection current —regional limit, includes sum of negative injection currents of 16 contiguous pins • Negative current injection	-25	—	mA	
V_{ODPU}	Open drain pullup voltage level	V_{DD}	V_{DD}	V	2
V_{RAM}	V_{DD} voltage required to retain RAM	1.2	—	V	

1. All I/O pins are internally clamped to V_{SS} through a ESD protection diode. There is no diode connection to V_{DD}. If V_{IN} greater than V_{IO_MIN} (= V_{SS}-0.3 V) is observed, then there is no need to provide current limiting resistors at the pads. If this limit cannot be observed then a current limiting resistor is required. The negative DC injection current limiting resistor is calculated as $R = (V_{IO_MIN} - V_{IN})/|I_{ICIO}|$.
2. Open drain outputs must be pulled to V_{DD}.

7.2.2 LVD and POR operating requirements

Table 10. V_{DD} supply LVD and POR operating requirements

Symbol	Description	Min.	Typ.	Max.	Unit	Notes
V_{POR}	Falling V_{DD} POR detect voltage	0.8	1.1	1.5	V	
V_{LVDH}	Falling low-voltage detect threshold — high range (LVDV = 01)	2.48	2.56	2.64	V	
	Low-voltage warning thresholds — high range					1
V_{LVW1H}	• Level 1 falling (LVWV = 00)	2.62	2.70	2.78	V	
V_{LVW2H}	• Level 2 falling (LVWV = 01)	2.72	2.80	2.88	V	
V_{LVW3H}	• Level 3 falling (LVWV = 10)	2.82	2.90	2.98	V	
V_{LVW4H}	• Level 4 falling (LVWV = 11)	2.92	3.00	3.08	V	

Table continues on the next page...

Table 10. V_{DD} supply LVD and POR operating requirements (continued)

Symbol	Description	Min.	Typ.	Max.	Unit	Notes
V_{HYSH}	Low-voltage inhibit reset/recover hysteresis — high range	—	±60	—	mV	
V_{LVDL}	Falling low-voltage detect threshold — low range (LVDV=00)	1.54	1.60	1.66	V	
	Low-voltage warning thresholds — low range					1
V_{LVW1L}	• Level 1 falling (LVWV = 00)	1.74	1.80	1.86	V	
V_{LVW2L}	• Level 2 falling (LVWV = 01)	1.84	1.90	1.96	V	
V_{LVW3L}	• Level 3 falling (LVWV = 10)	1.94	2.00	2.06	V	
V_{LVW4L}	• Level 4 falling (LVWV = 11)	2.04	2.10	2.16	V	
V_{HYSL}	Low-voltage inhibit reset/recover hysteresis — low range	—	±40	—	mV	
V_{BG}	Bandgap voltage reference	0.97	1.00	1.03	V	
t_{LPO}	Internal low power oscillator period — factory trimmed	900	1000	1100	μs	

1. Rising thresholds are falling threshold + hysteresis voltage

7.2.3 Voltage and current operating behaviors

Table 11. Voltage and current operating behaviors

Symbol	Description	Min.	Max.	Unit	Notes
V_{OH}	Output high voltage — Normal drive pad (except RESET_b)				1, 2
	• $2.7\ V \le V_{DD} \le 3.6\ V$, $I_{OH} = -5\ mA$	$V_{DD} - 0.5$	—	V	
	• $1.71\ V \le V_{DD} \le 2.7\ V$, $I_{OH} = -2.5\ mA$	$V_{DD} - 0.5$	—	V	
V_{OH}	Output high voltage — High drive pad (except RESET_b)				1, 2
	• $2.7\ V \le V_{DD} \le 3.6\ V$, $I_{OH} = -20\ mA$	$V_{DD} - 0.5$	—	V	
	• $1.71\ V \le V_{DD} \le 2.7\ V$, $I_{OH} = -10\ mA$	$V_{DD} - 0.5$	—	V	
I_{OHT}	Output high current total for all ports	—	100	mA	
V_{OL}	Output low voltage — Normal drive pad				1
	• $2.7\ V \le V_{DD} \le 3.6\ V$, $I_{OL} = 5\ mA$	—	0.5	V	
	• $1.71\ V \le V_{DD} \le 2.7\ V$, $I_{OL} = 2.5\ mA$	—	0.5	V	
V_{OL}	Output low voltage — High drive pad				1
	• $2.7\ V \le V_{DD} \le 3.6\ V$, $I_{OL} = 20\ mA$	—	0.5	V	
	• $1.71\ V \le V_{DD} \le 2.7\ V$, $I_{OL} = 10\ mA$	—	0.5	V	
I_{OLT}	Output low current total for all ports	—	100	mA	

Table continues on the next page...

Table 11. Voltage and current operating behaviors (continued)

Symbol	Description	Min.	Max.	Unit	Notes
I_{IN}	Input leakage current (per pin) for full temperature range	—	500	nA	3
I_{IN}	Input leakage current (per pin) at 25 °C	—	0.025	μA	3
I_{IN}	Input leakage current (total all pins) for full temperature range	—	5	μA	3
R_{PU}	Internal pullup resistors	20	50	kΩ	4

1. PTB0-1 and PTC0-3, PTC6, PTC7, PTC17, PTC18 I/O have both high drive and normal drive capability selected by the associated PTx_PCRn[DSE] control bit. All other GPIOs are normal drive only.
2. The reset pin only contains an active pull up device when configured as the RESET signal or as a GPIO. When configured as a GPIO output, it acts as a pseudo open drain output.
3. Measured at V_{DD} = 3.6 V
4. Measured at V_{DD} supply voltage = V_{DD} min and Vinput = V_{SS}

7.2.4 Power mode transition operating behaviors

All specifications except t_{POR} and VLLSx→RUN recovery times in the following table assume this clock configuration:

- CPU and system clocks = 48 MHz
- Bus and flash clock = 24 MHz
- FEI clock mode

POR and VLLSx→RUN recovery use FEI clock mode at the default CPU and system frequency of 21 MHz, and a bus and flash clock frequency of 10.5 MHz.

Table 12. Power mode transition operating behaviors

Symbol	Description	Max.	Unit	Notes
t_{POR}	After a POR event, amount of time from the point V_{DD} reaches 1.8 V to execution of the first instruction across the operating temperature range of the chip.	300	μs	1
	• VLLS0 → RUN	147	μs	
	• VLLS1 → RUN	144	μs	
	• VLLS2 → RUN	76	μs	
	• VLLS3 → RUN	76	μs	

Table continues on the next page...

Table 12. Power mode transition operating behaviors (continued)

Symbol	Description	Max.	Unit	Notes
	• LLS2 → RUN	5.8	µs	
	• LLS3 → RUN	5.8	µs	
	• VLPS → RUN	6.2	µs	
	• STOP → RUN	6.2	µs	

1. Normal boot (FTFA_FOPT[LPBOOT]=11). When the DC-DC converter is in bypass mode, TPOR will not meet the 300µs spec when 1) VDD_1P5 < 1.6V at 25°C and °C. 2) 1.5V ≤ VDD_1P5 ≤ 1.8V. For the bypass mode special case where VDD_1P5 = VDD_1P8, TPOR did not meet the 300µs maximum spec when the supply slew rate <=100V/s.

7.2.5 Power consumption operating behaviors

Table 13. Power consumption operating behaviors - Bypass Mode

Symbol	Description	Typ.	Max.	Unit	Notes
I_{DDA}	Analog supply current	—	See note	mA	1
$I_{DD_RUNCO_CM}$	Run mode current in compute operation - 48 MHz core / 24 MHz flash / bus disabled, LPTMR running using LPO clock at 1kHz, CoreMark benchmark code executing from flash at 3.0 V	7.79	8.64	mA	2
I_{DD_RUNCO}	Run mode current in compute operation - 48 MHz core / 24 MHz flash / bus clock disabled, code of while(1) loop executing from flash at 3.0 V	4.6	5.45	mA	3
I_{DD_RUN}	Run mode current - 48 MHz core / 24 MHz bus and flash, all peripheral clocks disabled, code of while(1) loop executing from flash at 3.0 V	5.6	6.45	mA	3
I_{DD_RUN}	Run mode current - 48 MHz core / 24 MHz bus and flash, all peripheral clocks enabled, code of while(1) loop executing from flash at 3.0 V				3, 4
	at 25 °C	6.9	7.2	mA	
	at 105 °C	7.7	8.5	mA	
I_{DD_WAIT}	Wait mode current - core disabled / 48 MHz system / 24 MHz bus / flash disabled (flash doze enabled), all peripheral clocks disabled at 3.0 V	4.2	5.05	mA	3
I_{DD_WAIT}	Wait mode current - core disabled / 24 MHz system / 24 MHz bus / flash disabled (flash doze enabled), all peripheral clocks disabled at 3.0 V	3.5	4.35	mA	3
I_{DD_PSTOP2}	Stop mode current with partial stop 2 clocking option - core and system disabled / 10.5 MHz bus at 3.0 V	2.7	3.55	mA	3

Table continues on the next page...

Table 13. Power consumption operating behaviors - Bypass Mode (continued)

Symbol	Description	Typ.	Max.	Unit	Notes
$I_{DD_VLPRCO_CM}$	Very-low-power run mode current in compute operation - 4 MHz core / 0.8 MHz flash / bus clock disabled, LPTMR running using LPO clock at 1 kHz reference clock, CoreMark benchmark code executing from flash at 3.0 V	760	960	μA	5
I_{DD_VLPRCO}	Very-low-power run mode current in compute operation - 4 MHz core / 0.8 MHz flash / bus clock disabled, code of while(1) loop executing from flash at 3.0 V	157	357	μA	6
I_{DD_VLPR}	Very-low-power run mode current - 4 MHz core / 0.8 MHz bus and flash, all peripheral clocks disabled, code of while(1) loop executing from flash at 3.0 V	195	395	μA	6
I_{DD_VLPR}	Very-low-power run mode current - 4 MHz core / 0.8 MHz bus and flash, all peripheral clocks enabled, code of while(1) loop executing from flash at 3.0 V	250	450	μA	4, 6
I_{DD_VLPW}	Very-low-power wait mode current - core disabled / 4 MHz system / 0.8 MHz bus / flash disabled (flash doze enabled), all peripheral clocks disabled at 3.0 V	142	342	μA	6
I_{DD_STOP}	Stop mode current at 3.0 V				
	at 25 °C	0.204	0.294	mA	
	at 70 °C	0.275	0.692	mA	
	at 105 °C	0.561	1.3	mA	
I_{DD_VLPS}	Very-low-power stop mode current at Bypass mode(3.0 V),				
	at 25 °C	4.3	18	μA	
	at 70 °C	17	42	μA	
	at 105 °C	157	328	μA	
I_{DD_LLS3}	Low-leakage stop mode 3 current at Bypass mode(3.0 V),				
	at 25 °C	2.7	5	μA	
	at 70 °C	9	16.5	μA	
	at 105 °C	69	128	μA	
I_{DD_LLS2}	Low-leakage stop mode 2 current at Bypass mode(3.0 V),				
	at 25 °C	2	3.13	μA	
	at 70 °C	3.2	10.5	μA	
	at 105 °C	39	65.5	μA	
I_{DD_VLLS3}	Very-low-leakage stop mode 3 current at Bypass mode(3.0 V),				
	at 25 °C	2.3	4	μA	
	at 70 °C	15	28.5	μA	

Table continues on the next page...

Table 13. Power consumption operating behaviors - Bypass Mode (continued)

Symbol	Description	Typ.	Max.	Unit	Notes
	at 105 °C	58	108	μA	
I_{DD_VLLS2}	Very-low-leakage stop mode 2 current at Bypass mode(3.0 V),				
	at 25 °C	1.5	2.21	μA	
	at 70 °C	6.3	11.8	μA	
	at 105 °C	27	42.6	μA	
I_{DD_VLLS1}	Very-low-leakage stop mode 1 current at Bypass mode(3.0 V),				
	at 25°C	0.56	1.3	μA	
	at 70°C	3	9.4	μA	
	at 105°C	16.8	27.1	μA	
I_{DD_VLLS0}	Very-low-leakage stop mode 0 current (SMC_STOPCTRL[PORPO] = 0) at 3.0 V				
	at 25 °C	0.36	0.949	μA	
	at 70 °C	2.7	8.2	μA	
	at 85 °C	16.5	27	μA	
	at 105 °C				
I_{DD_VLLS0}	Very-low-leakage stop mode 0 current (SMC_STOPCTRL[PORPO] = 1) at 3.0 V				7
	at 25 °C	0.182	0.765	μA	
	at 70 °C	2.5	6.7	μA	
	at 85 °C	16.3	26	μA	
	at 105 °C				

1. The analog supply current is the sum of the active or disabled current for each of the analog modules on the device. See each module's specification for its supply current.
2. MCG configured for FEImode. CoreMark benchmark compiled using IAR 7.70 with optimization level high, optimized for balanced.
3. MCG configured for FEI mode.
4. Incremental current consumption from peripheral activity is not included.
5. MCG configured for BLPI mode. CoreMark benchmark compiled using IAR 7.70 with optimization level high, optimized for balanced.
6. MCG configured for BLPI mode.
7. No brownout

Table 14. Power consumption operating behaviors - Buck Mode

Symbol	Description	Typ.	Max.	Unit	Notes
I_{DDA}	Analog supply current	—	See note	mA	1
I_{DD_RUNCO}	Run mode current in compute operation - 48 MHz core / 24 MHz flash / bus clock disabled, code of while(1) loop executing from flash at 3.0 V	3.1	—	mA	2

Table continues on the next page...

Table 14. Power consumption operating behaviors - Buck Mode (continued)

Symbol	Description	Typ.	Max.	Unit	Notes
I_{DD_RUN}	Run mode current - 48 MHz core / 24 MHz bus and flash, all peripheral clocks disabled, code of while(1) loop executing from flash at 3.0 V	3.85	—	mA	2
I_{DD_RUN}	Run mode current - 48 MHz core / 24 MHz bus and flash, all peripheral clocks enabled, code of while(1) loop executing from flash at 3.0 V				2, 3
	at 25 °C	4.8	—	mA	
	at 85 °C	5.3	—	mA	
	at 105 °C	5.7	—	mA	
I_{DD_WAIT}	Wait mode current - core disabled / 48 MHz system / 24 MHz bus / flash disabled (flash doze enabled), all peripheral clocks disabled at 3.0 V	3.1	—	mA	2
I_{DD_WAIT}	Wait mode current - core disabled / 24 MHz system / 24 MHz bus / flash disabled (flash doze enabled), all peripheral clocks disabled at 3.0 V	2.9	—	mA	2
I_{DD_PSTOP2}	Stop mode current with partial stop 2 clocking option - core and system disabled / 10.5 MHz bus at 3.0 V	1.9	—	mA	2
I_{DD_VLPRCO}	Very-low-power run mode current in compute operation - 4 MHz core / 0.8 MHz flash / bus clock disabled, code of while(1) loop executing from flash at 3.0 V	137	—	µA	4
I_{DD_VLPR}	Very-low-power run mode current - 4 MHz core / 0.8 MHz bus and flash, all peripheral clocks disabled, code of while(1) loop executing from flash at 3.0 V	154	—	µA	-1
I_{DD_VLPR}	Very-low-power run mode current - 4 MHz core / 0.8 MHz bus and flash, all peripheral clocks enabled, code of while(1) loop executing from flash at 3.0 V	216	—	µA	3, 4
I_{DD_VLPW}	Very-low-power wait mode current - core disabled / 4 MHz system / 0.8 MHz bus / flash disabled (flash doze enabled), all peripheral clocks disabled at 3.0 V	131	—	µA	4
I_{DD_STOP}	Stop mode current at 3.0 V				
	at 25 °C	1.61	2.32	mA	
	at 70 °C	1.73	4.35	mA	
	at 105 °C	2.02	4.68	mA	
I_{DD_VLPS}	Very-low-power stop mode current at Buck mode(3.0 V),				
	at 25 °C	3.58	14.98	µA	
	at 70 °C	15.08	37.27	µA	
	at 105 °C	116.94	244.30	µA	
I_{DD_LLS3}	Low-leakage stop mode 3 current at Buck mode(3.0 V),				
	at 25 °C	2.20	4.08	µA	

Table continues on the next page...

Table 14. Power consumption operating behaviors - Buck Mode (continued)

Symbol	Description	Typ.	Max.	Unit	Notes
	at 70 °C	7.44	13.63	μA	
	at 105 °C	48.78	90.49	μA	
I_{DD_LLS2}	Low-leakage stop mode 2 current at Buck mode(3.0 V),				
	at 25 °C	1.86	2.91	μA	
	at 70 °C	3.19	10.48	μA	
	at 105 °C	31.44	52.80	μA	
I_{DD_VLLS3}	Very-low-leakage stop mode 3 current at Buck mode(3.0 V),				
	at 25 °C	1.79	3.12	μA	
	at 70 °C	12	22.8	μA	
	at 105 °C	37.49	69.81	μA	
I_{DD_VLLS2}	Very-low-leakage stop mode 2 current at Buck mode(3.0 V),				
	at 25 °C	1.09	1.60	μA	
	at 70 °C	5.56	10.40	μA	
	at 105 °C	18.71	29.52	μA	
I_{DD_VLLS1}	Very-low-leakage stop mode 1 current at Buck mode(3.0 V),				
	at 25 °C	0.46	1.07	μA	
	at 70 °C	2.17	6.8	μA	
	at 105 °C	14.08	22.71	μA	

1. The analog supply current is the sum of the active or disabled current for each of the analog modules on the device. See each module's specification for its supply current.
2. MCG configured for FEI mode.
3. Incremental current consumption from peripheral activity is not included.
4. MCG configured for BLPI mode.

Table 15. Power consumption operating behaviors - Boost Mode

Symbol	Description	Typ.	Max.	Unit	Notes
I_{DDA}	Analog supply current	—	See note	mA	1
I_{DD_RUNCO}	Run mode current in compute operation - 48 MHz core / 24 MHz flash / bus clock disabled, code of while(1) loop executing from flash at 1.3 V	8.1	—	mA	2
I_{DD_RUN}	Run mode current - 48 MHz core / 24 MHz bus and flash, all peripheral clocks disabled, code of while(1) loop executing from flash at 1.3 V	9.76	—	mA	2
I_{DD_RUN}	Run mode current - 48 MHz core / 24 MHz bus and flash, all peripheral clocks enabled, code of while(1) loop executing from flash at 1.3 V				2, 3
	at 25 °C	13.2	—	mA	

Table continues on the next page...

Table 15. Power consumption operating behaviors - Boost Mode (continued)

Symbol	Description	Typ.	Max.	Unit	Notes
	at 85 °C	14.1	—	mA	
	at 105 °C	15.2	—	mA	
I_{DD_WAIT}	Wait mode current - core disabled / 48 MHz system / 24 MHz bus / flash disabled (flash doze enabled), all peripheral clocks disabled at 1.3 V	6.9	—	mA	2
I_{DD_WAIT}	Wait mode current - core disabled / 24 MHz system / 24 MHz bus / flash disabled (flash doze enabled), all peripheral clocks disabled at 1.3 V	5.8	—	mA	2
I_{DD_PSTOP2}	Stop mode current with partial stop 2 clocking option - core and system disabled / 10.5 MHz bus at 1.3 V	8.3	—	mA	2
I_{DD_VLPRCO}	Very-low-power run mode current in compute operation - 4 MHz core / 0.8 MHz flash / bus clock disabled, code of while(1) loop executing from flash at 1.3 V	378	—	µA	4
I_{DD_VLPR}	Very-low-power run mode current - 4 MHz core / 0.8 MHz bus and flash, all peripheral clocks disabled, code of while(1) loop executing from flash at 1.3 V	476	—	µA	4
I_{DD_VLPR}	Very-low-power run mode current - 4 MHz core / 0.8 MHz bus and flash, all peripheral clocks enabled, code of while(1) loop executing from flash at 1.3 V	606	—	µA	3, 4
I_{DD_VLPW}	Very-low-power wait mode current - core disabled / 4 MHz system / 0.8 MHz bus / flash disabled (flash doze enabled), all peripheral clocks disabled at 1.3 V	357	—	µA	4
I_{DD_STOP}	Stop mode current at 1.3 V				
	at 25 °C	3.22	4.64	mA	
	at 70 °C	3.56	8.96	mA	
	at 105 °C	3.74	9.73	mA	
I_{DD_VLPS}	Very-low-power stop mode current at Boost mode(1.3 V),				
	at 25 °C	29.89	125.13	µA	
	at 70 °C	191.62	473.41	µA	
	at 105 °C	1429.24	2985.93	µA	
I_{DD_LLS3}	Low-leakage stop mode 3 current at Boost mode(1.3 V),				
	at 25 °C	12.16	22.53	µA	
	at 70 °C	84.61	155.12	µA	
	at 105 °C	534.09	990.79	µA	
I_{DD_LLS2}	Low-leakage stop mode 2 current at Boost mode(1.3 V),				
	at 25 °C	12.05	18.86	µA	
	at 70 °C	17.36	56.96	µA	

Table continues on the next page...

Table 15. Power consumption operating behaviors - Boost Mode (continued)

Symbol	Description	Typ.	Max.	Unit	Notes
	at 105 °C	221.29	371.66	μA	
I_{DD_VLLS3}	Very-low-leakage stop mode 3 current at Boost mode(1.3 V),				
	at 25 °C	7.99	13.89	μA	
	at 70 °C	88.4	167.96	μA	
	at 105 °C	287.14	534.67	μA	
I_{DD_VLLS2}	Very-low-leakage stop mode 2 current at Boost mode(1.3 V),				
	at 25 °C	7.09	10.45	μA	
	at 70 °C	23.38	43.79	μA	
	at 105 °C	95.67	150.94	μA	
I_{DD_VLLS1}	Very-low-leakage stop mode 1 current at Boost mode(1.3 V),				
	at 25 °C	3.63	8.44	μA	
	at 70 °C	16.23	50.86	μA	
	at 105 °C	67.77	109.32	μA	

1. The analog supply current is the sum of the active or disabled current for each of the analog modules on the device. See each module's specification for its supply current.
2. MCG configured for FEI mode.
3. Incremental current consumption from peripheral activity is not included.
4. MCG configured for BLPI mode.

Table 16. Low power mode peripheral adders — typical value

Symbol	Description	Temperature (°C)					Unit
		-40	25	50	70	85	
$I_{IREFSTEN4MHz}$	4 MHz internal reference clock (IRC) adder. Measured by entering STOP or VLPS mode with 4 MHz IRC enabled.	46	46	47	47	47	μA
$I_{IREFSTEN32KHz}$	32 kHz internal reference clock (IRC) adder. Measured by entering STOP mode with the 32 kHz IRC enabled.	88	91	90	89	88	μA
$I_{EREFSTEN32KHz}$	External 32 kHz crystal clock adder by means of the RTC bits. Measured by entering all modes with the crystal enabled.						
	VLLS1	1.4	1.3	1.6	2.4	4.1	
	VLLS2	1.6	1.5	1.9	4.2	7.7	μA
	VLLS3	2.7	1.9	2.9	7.7	15	
	LLS2	1.8	1.4	1.7	4.1	8	
	LLS3	2.6	1.7	2.8	7.6	15.2	

Table continues on the next page...

Table 16. Low power mode peripheral adders — typical value (continued)

Symbol	Description	Temperature (°C)					Unit
		-40	25	50	70	85	
I_{CMP}	CMP peripheral adder measured by placing the device in VLLS1 mode with CMP enabled using the 6-bit DAC and a single external input for compare. Includes 6-bit DAC power consumption.	22	19	20	21	21	μA
I_{RTC}	RTC peripheral adder measured by placing the device in VLLS1 mode with external 32 kHz crystal enabled by means of the RTC_CR[OSCE] bit and the RTC ALARM set for 1 minute. Includes ERCLK32K (32 kHz external crystal) power consumption.	1.4	1.3	1.6	2.4	4.3	μA
I_{LPUART}	LPUART peripheral adder measured by placing the device in STOP or VLPS mode with selected clock source waiting for RX data at 115200 baud rate. Includes selected clock source power consumption. MCGIRCLK (4 MHz internal reference clock)	53	54	54	54	54	μA
I_{LPTMR}	LPTMR peripheral adder measured by placing the device in VLLS1 mode with LPTMR enabled using LPO.	30	30	30	85	100	nA
I_{TPM}	TPM peripheral adder measured by placing the device in STOP or VLPS mode with selected clock source configured for output compare generating 100 Hz clock signal. No load is placed on the I/O generating the clock signal. Includes selected clock source and I/O switching currents. MCGIRCLK (4 MHz internal reference clock)	58	59	59	59	59	μA
I_{BG}	Bandgap adder when BGEN bit is set and device is placed in VLPx, LLS, or VLLSx mode.	76	82	85	87	87	μA
I_{ADC}	ADC peripheral adder combining the measured values at V_{DD} and V_{DDA} by placing the device in STOP or VLPS mode. ADC is configured for low-power mode using the internal clock and continuous conversions.	331	327	327	327	328	μA

7.2.6 Diagram: Typical IDD_RUN operating behavior

The following data was measured from previous devices with same MCU core (Arm® Cortex-M0+) under these conditions:

- No GPIOs toggled
- Code execution from flash with cache enabled
- For the ALLOFF curve, all peripheral clocks are disabled except FTFA

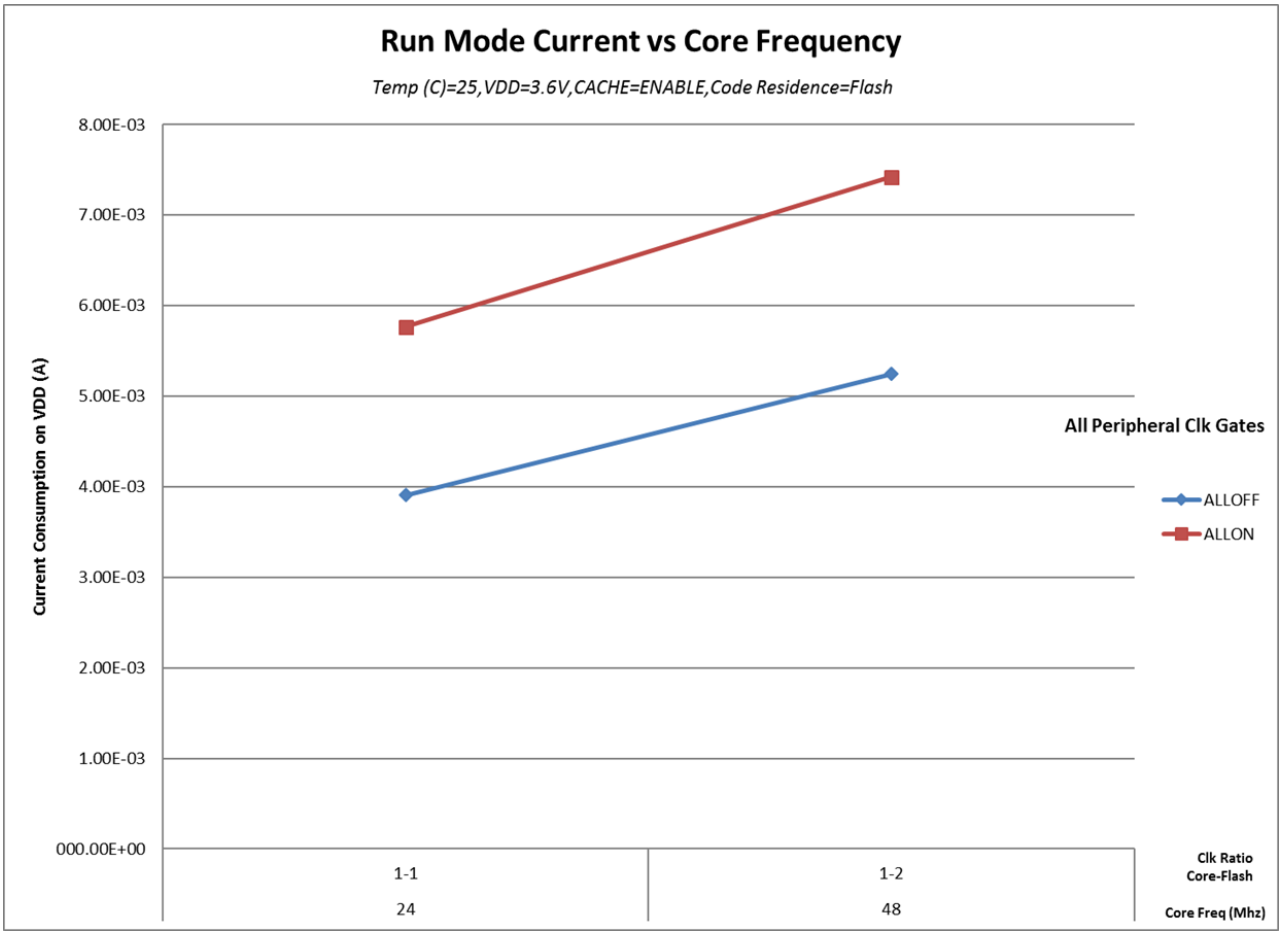

Figure 4. Run mode supply current vs. core frequency

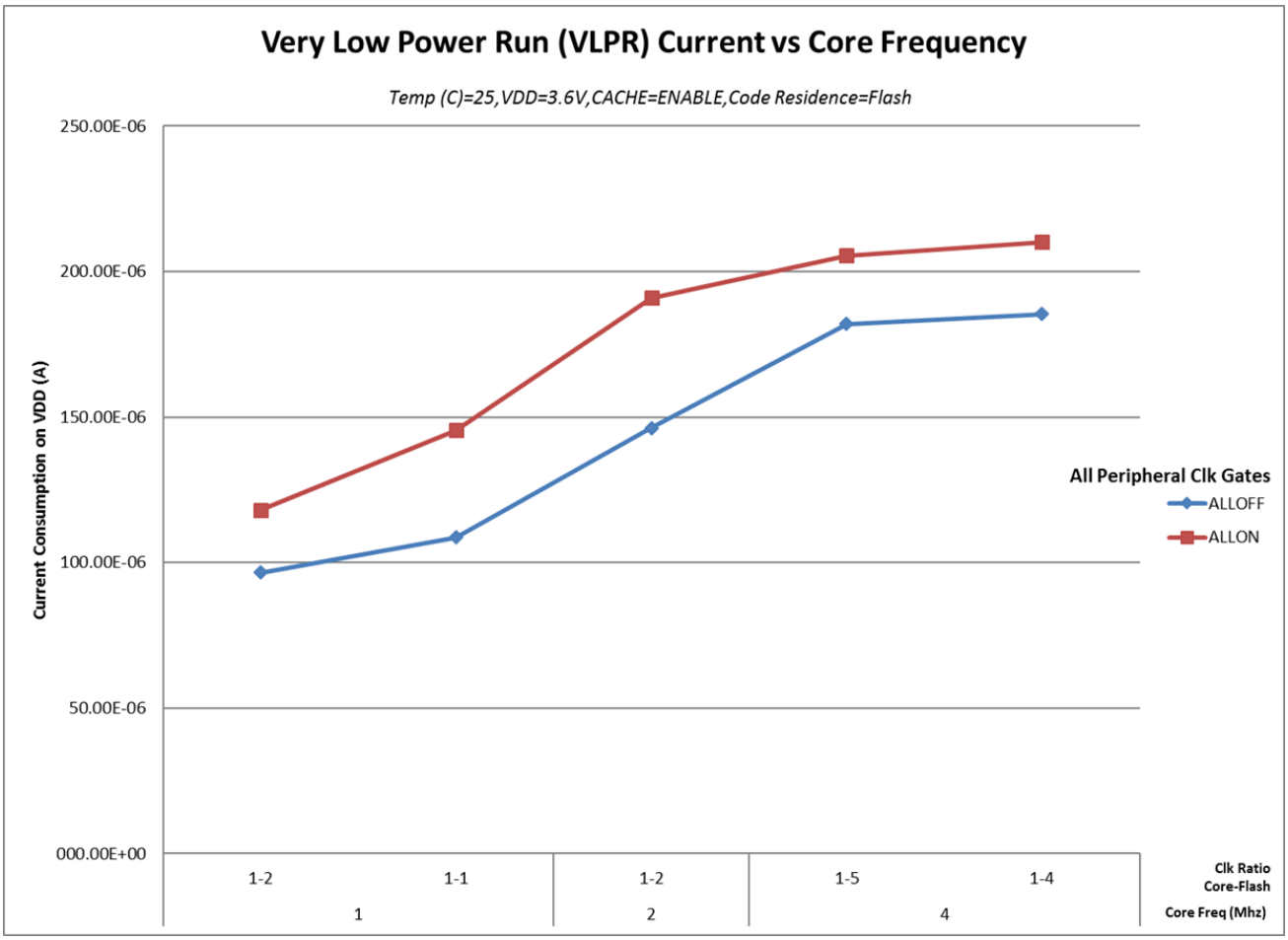

Figure 5. VLPR mode current vs. core frequency

7.2.7 SoC Power Consumption

Full MWPR1x24 system-on-chip (SoC) power consumption is a function of the many configurations possible for the MCU platform and its peripherals including the 2.4GHz radio and the DC-DC converter. A few measured SoC configurations are as follows:

Table 17. SoC Power Consumption

MCU State	Flash State	Radio State	DCDC State	Typical Average IC current	Unit
STOP	Doze	Rx	Buck(VDD_{DCDC_in}=3.6 V)	8.4	mA
STOP	Doze	Tx(at 0 dBm)	Buck(VDD_{DCDC_in}=3.6 V)	7.6	mA
RUN	Enabled	Rx	Buck(VDD_{DCDC_in}=3.6 V)	10.2	mA
RUN	Enabled	Tx(at 0 dBm)	Buck(VDD_{DCDC_in}=3.6 V)	9.6	mA

Table continues on the next page...

Table 17. SoC Power Consumption (continued)

MCU State	Flash State	Radio State	DCDC State	Typical Average IC current	Unit
STOP	Doze	Rx	Disabled/Bypass	16.6	mA
STOP	Doze	Tx(at 0 dBm)	Disabled/Bypass	15.2	mA
RUN	Enabled	Rx	Disabled/Bypass	19.7	mA
RUN	Enabled	Tx(at 0 dBm)	Disabled/Bypass	19.2	mA

7.2.8 Designing with radiated emissions in mind

To find application notes that provide guidance on designing your system to minimize interference from radiated emissions:

1. Go to www.nxp.com
2. Perform a keyword search for “EMC design.”

7.2.9 Capacitance attributes

Table 18. Capacitance attributes

Symbol	Description	Min.	Max.	Unit
C_{IN}	Input capacitance	—	7	pF

7.3 Switching electrical specifications

7.3.1 Device clock specifications

Table 19. Device clock specifications

Symbol	Description	Min.	Max.	Unit
Normal run mode				
f_{SYS}	System and core clock	—	48	MHz
f_{BUS}	Bus clock	—	24	MHz
f_{FLASH}	Flash clock	—	24	MHz
f_{LPTMR}	LPTMR clock	—	24	MHz

Table continues on the next page...

Table 19. Device clock specifications (continued)

Symbol	Description	Min.	Max.	Unit
	VLPR and VLPS modes[1]			
f_{SYS}	System and core clock	—	4	MHz
f_{BUS}	Bus clock	—	1	MHz
f_{FLASH}	Flash clock	—	1	MHz
f_{LPTMR}	LPTMR clock[2]	—	24	MHz
f_{ERCLK}	External reference clock	—	16	MHz
f_{LPTMR_ERCLK}	LPTMR external reference clock	—	16	MHz
f_{TPM}	TPM asynchronous clock	—	8	MHz
$f_{LPUART0}$	LPUART0 asynchronous clock	—	12	MHz

1. The frequency limitations in VLPR and VLPS modes here override any frequency specification listed in the timing specification for any other module. These same frequency limits apply to VLPS, whether VLPS was entered from RUN or from VLPR.
2. The LPTMR can be clocked at this speed in VLPR or VLPS only when the source is an external pin.

7.3.2 General switching specifications

These general-purpose specifications apply to all signals configured for GPIO, LPUART, CMT and I^2C signals.

Table 20. General switching specifications

Description	Min.	Max.	Unit	Notes
GPIO pin interrupt pulse width (digital glitch filter disabled) — Synchronous path	1.5	—	Bus clock cycles	1, 2
NMI_b pin interrupt pulse width (analog filter enabled) — Asynchronous path	200	—	ns	3
GPIO pin interrupt pulse width (digital glitch filter disabled, analog filter disabled) — Asynchronous path	20	—	ns	3
External RESET_b input pulse width (digital glitch filter disabled)	100	—	ns	
Port rise and fall time(high drive strength)				4, 5
• Slew enabled	—	25	ns	
• 1.71 ≤ VDD ≤ 2.7 V	—	16	ns	
• 2.7 ≤ VDD ≤ 3.6 V				
• Slew disabled	—	8	ns	
• 1.71 ≤ VDD ≤ 2.7 V	—	6	ns	
• 2.7 ≤ VDD ≤ 3.6 V				
Port rise and fall time(low drive strength)				6, 7
• Slew enabled	—	24	ns	

Table 20. General switching specifications

Description	Min.	Max.	Unit	Notes
• 1.71 ≤ VDD ≤ 2.7 V • 2.7 ≤ VDD ≤ 3.6 V	—	16 10	ns ns	
• Slew disabled • 1.71 ≤ VDD ≤ 2.7 V • 2.7 ≤ VDD ≤ 3.6 V	— —	6	ns	

1. This is the minimum pulse width that is guaranteed to pass through the pin synchronization circuitry in run modes.
2. The greater of synchronous and asynchronous timing must be met.
3. This is the minimum pulse width that is guaranteed to be recognized.
4. PTB0, PTB1, PTC0, PTC1, PTC2, PTC3, PTC6, PTC7, PTC17, PTC18.
5. 75 pF load.
6. Ports A, B, and C.
7. 25 pF load.

7.4 Thermal specifications

7.4.1 Thermal operating requirements

Table 21. Thermal operating requirements

Symbol	Description	Min.	Max.	Unit	Notes
T_J	Die junction temperature • For Laminate QFN package	–40	125	°C	
T_A	Ambient temperature • For Laminate QFN package	–40	105	°C	1

1. Maximum T_A can be exceeded only if the user ensures that T_J does not exceed the maximum. The simplest method to determine T_J is: $T_J = T_A + R_{\theta JA} \times$ chip power dissipation.

7.4.2 Thermal attributes

Table 22. Thermal attributes

Board type	Symbol	Description	48-pin Laminate QFN	Unit	Notes
Single-layer (1S)	$R_{\theta JA}$	Thermal resistance, junction to ambient (natural convection)	59.3	°C/W	2, 1
Four-layer (2s2p)	$R_{\theta JA}$	Thermal resistance, junction to ambient (natural convection)	42.9	°C/W	2, 1
Single-layer (1S)	$R_{\theta JMA}$	Thermal resistance, junction to ambient (200 ft./min. air speed)	51.6	°C/W	2, 1

Table continues on the next page...

Table 22. Thermal attributes (continued)

Board type	Symbol	Description	48-pin Laminate QFN	Unit	Notes
Four-layer (2s2p)	$R_{\theta JMA}$	Thermal resistance, junction to ambient (200 ft./min. air speed)	38.9	°C/W	2, 1
—	$R_{\theta JB}$	Thermal resistance, junction to board	37.7	°C/W	3
—	$R_{\theta JC}$	Thermal resistance, junction to case	0.48	°C/W	4
—	Ψ_{JT}	Thermal characterization parameter, junction to package top outside center (natural convection)	0.2	°C/W	5
—	$R_{\theta JB_CSB}$	Thermal characterization parameter, junction to package bottom outside center (natural convection)	—	°C/W	6

1. Determined according to JEDEC Standard JESD51-2, *Integrated Circuits Thermal Test Method Environmental Conditions—Natural Convection (Still Air)*, or EIA/JEDEC Standard JESD51-6, *Integrated Circuit Thermal Test Method Environmental Conditions—Forced Convection (Moving Air)*.
2. Per SEMI G38-87 and JEDEC JESD51-2 with the single layer board horizontal.
3. Determined according to JEDEC Standard JESD51-8, *Integrated Circuit Thermal Test Method Environmental Conditions—Junction-to-Board*. Board temperature is measured on the top surface of the board near the package.
4. Determined according to Method 1012.1 of MIL-STD 883, *Test Method Standard, Microcircuits*, with the cold plate temperature used for the case temperature. The value includes the thermal resistance of the interface material between the top of the package and the cold plate.
5. Determined according to JEDEC Standard JESD51-2, *Integrated Circuits Thermal Test Method Environmental Conditions—Natural Convection (Still Air)*.
6. Thermal resistance between the die and the central solder balls on the bottom of the package based on simulation.

7.5 Peripheral operating requirements and behaviors

7.5.1 Core modules

7.5.1.1 SWD electricals

Table 23. SWD full voltage range electricals

Symbol	Description	Min.	Max.	Unit
	Operating voltage	1.71	3.6	V
J1	SWD_CLK frequency of operation • Serial wire debug	0	25	MHz
J2	SWD_CLK cycle period	1/J1	—	ns
J3	SWD_CLK clock pulse width • Serial wire debug	20	—	ns

Table continues on the next page...

Table 23. SWD full voltage range electricals (continued)

Symbol	Description	Min.	Max.	Unit
J4	SWD_CLK rise and fall times	—	3	ns
J9	SWD_DIO input data setup time to SWD_CLK rise	10	—	ns
J10	SWD_DIO input data hold time after SWD_CLK rise	0	—	ns
J11	SWD_CLK high to SWD_DIO data valid	—	32	ns
J12	SWD_CLK high to SWD_DIO high-Z	5	—	ns

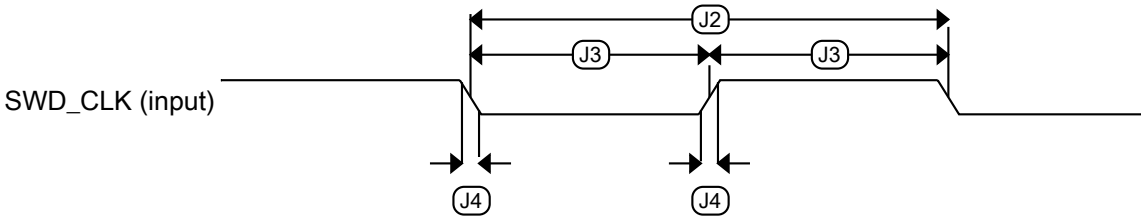

Figure 6. Serial wire clock input timing

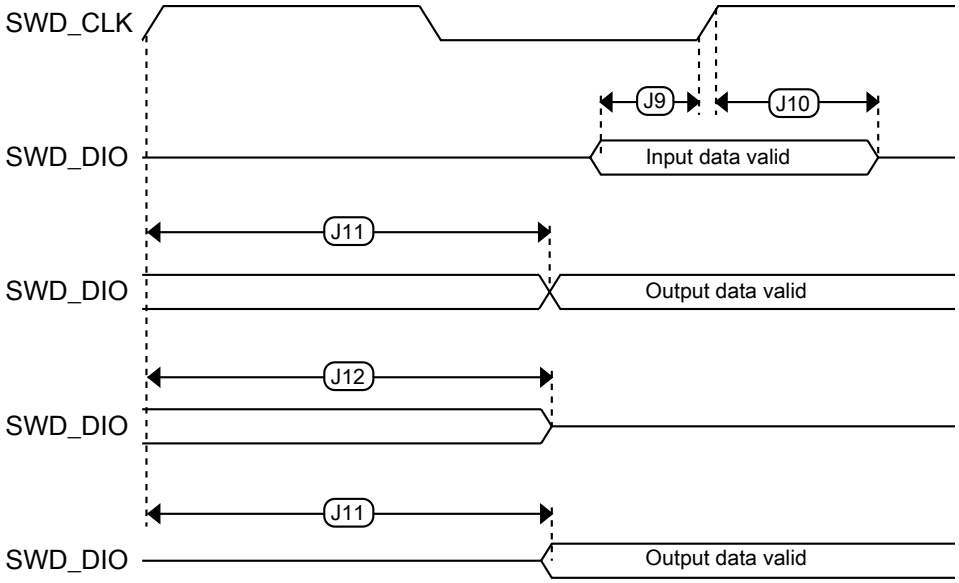

Figure 7. Serial wire data timing

7.5.2 System modules

There are no specifications necessary for the device's system modules.

7.5.3 Clock modules

7.5.3.1 MCG specifications

Table 24. MCG specifications

Symbol	Description		Min.	Typ.	Max.	Unit	Notes
f_{ints_ft}	Internal reference frequency (slow clock) — factory trimmed at nominal V_{DD} and 25 °C		—	32.768	—	kHz	
f_{ints_t}	Internal reference frequency (slow clock) — user trimmed		31.25	—	39.0625	kHz	
$\Delta_{fdco_res_t}$	Resolution of trimmed average DCO output frequency at fixed voltage and temperature — using C3[SCTRIM] and C4[SCFTRIM]		—	± 0.3	± 0.6	$\%f_{dco}$	1
Δf_{dco_t}	Total deviation of trimmed average DCO output frequency over voltage and temperature		—	+0.5/-0.7	± 3	$\%f_{dco}$	1, 2
Δf_{dco_t}	Total deviation of trimmed average DCO output frequency over fixed voltage and temperature range of 0–70 °C		—	± 0.4	± 1.5	$\%f_{dco}$	1, 2
f_{intf_ft}	Internal reference frequency (fast clock) — factory trimmed at nominal V_{DD} and 25 °C		—	4	—	MHz	
Δf_{intf_ft}	Frequency deviation of internal reference clock (fast clock) over temperature and voltage — factory trimmed at nominal V_{DD} and 25 °C		—	+1/-2	± 3	$\%f_{intf_ft}$	2
f_{intf_t}	Internal reference frequency (fast clock) — user trimmed at nominal V_{DD} and 25 °C		3	—	5	MHz	
f_{loc_low}	Loss of external clock minimum frequency — RANGE = 00		(3/5) x f_{ints_t}	—	—	kHz	
f_{loc_high}	Loss of external clock minimum frequency — RANGE = 01, 10, or 11		(16/5) x f_{ints_t}	—	—	kHz	
FLL							
f_{fll_ref}	FLL reference frequency range		31.25	—	39.0625	kHz	
f_{dco}	DCO output frequency range	Low range (DRS = 00) $640 \times f_{fll_ref}$	20	20.97	25	MHz	3, 4
		Mid range (DRS = 01) $1280 \times f_{fll_ref}$	40	41.94	48	MHz	
$f_{dco_t_DMX32}$	DCO output frequency	Low range (DRS = 00) $732 \times f_{fll_ref}$	—	23.99	—	MHz	5, 6
		Mid range (DRS = 01) $1464 \times f_{fll_ref}$	—	47.97	—	MHz	
J_{cyc_fll}	FLL period jitter • f_{VCO} = 48 MHz		—	180	—	ps	7
$t_{fll_acquire}$	FLL target frequency acquisition time		—	—	1	ms	8

1. This parameter is measured with the internal reference (slow clock) being used as a reference to the FLL (FEI clock mode).
2. The deviation is relative to the factory trimmed frequency at nominal V_{DD} and 25 °C, f_{ints_ft}.
3. These typical values listed are with the slow internal reference clock (FEI) using factory trim and DMX32 = 0.
4. The resulting system clock frequencies must not exceed their maximum specified values. The DCO frequency deviation (Δf_{dco_t}) over voltage and temperature must be considered.
5. These typical values listed are with the slow internal reference clock (FEI) using factory trim and DMX32 = 1.
6. The resulting clock frequency must not exceed the maximum specified clock frequency of the device.
7. This specification is based on standard deviation (RMS) of period or frequency.
8. This specification applies to any time the FLL reference source or reference divider is changed, trim value is changed, DMX32 bit is changed, DRS bits are changed, or changing from FLL disabled (BLPE, BLPI) to FLL enabled (FEI, FEE, FBE, FBI). If a crystal/resonator is being used as the reference, this specification assumes it is already running.

7.5.3.2 Reference Oscillator Specification

The MWPR1x24 has been designed to meet targeted specifications with a +/-20 ppm frequency error over the life of the part, which includes the temperature, mechanical and aging effects.

The table below lists the recommended crystal specifications. Note that these are recommendations only and deviation may be allowed. However, deviations may result in degraded RF performance or possibly a failure to meet RF protocol certification standards. Designers must ensure that the crystal(s) they use will meet the requirements of their application.

Table 25. Recommended Crystal Specification

Symbol	Description	Comment	32M			26M			Unit
			Min	Typ	Max	Min	Typ	Max	
	Operating Temperature		-40		105	-40		105	°C
Faging	Frequency accuracy over aging	1st year	-5		5	-5		5	ppm - 1st yr
iFacc	Initial Frequency accuracy	with respect to XO	-10		10	-10		10	ppm
Fstab	Frequency stability	across temperature, mechanical , load and voltage changes	-10		10	-10		10	ppm
CL	Values of CL supported(Integrated on die and programmable)		7	10	13	7	10	13	pF
Co	Shunt parasitic capacitance		0.469	0.67	0.871	0.42	0.6	0.78	pF

Table continues on the next page...

Table 25. Recommended Crystal Specification (continued)

Symbol	Description	Comment	32M			26M			Unit
			Min	Typ	Max	Min	Typ	Max	
Cm1	Motional capacitance Cm1		1.435	2.05	2.665	1.435	2.05	2.665	fF
Lm1	Motional inductance Lm1		8.47	12.1	15.73	12.81	18.3	23.79	mH
TS	Trim Sensitivity (TS) for the supported [Co,CL] values		6.30	9.00	11.70	6.39	9.12	11.86	ppm/pF
T_{OSC}	Oscillator Startup Time		—	680	—	—	680	—	µs
Rm1	ESR: Maximum value of Rm1			25	60		35	60	Ohms
	Maximum crystal drive level limit				200			200	µW

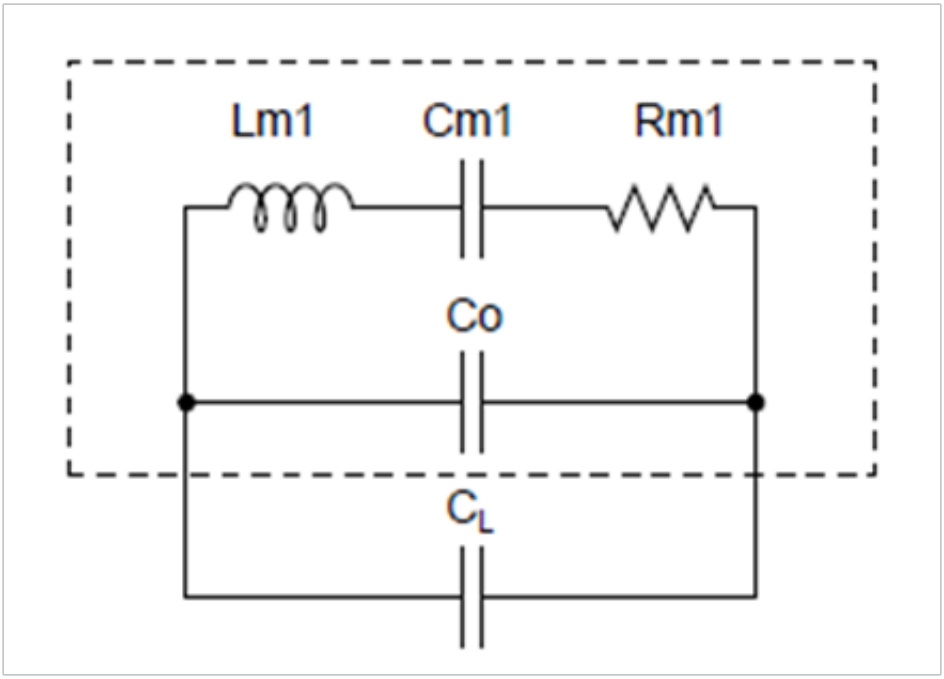

Figure 8. Crystal Electrical Model

7.5.3.3 32 kHz Oscillator Frequency Specifications

Table 26. 32 kHz oscillator frequency specifications

Symbol	Description	Min.	Typ.	Max.	Unit	Notes
f_{osc_lo}	Oscillator crystal	—	32.768	—	kHz	
t_{start}	Crystal start-up time	—	1000	—	ms	1
$f_{ec_extal32}$	Externally provided input clock frequency	—	32.678	—	kHz	2
$v_{ec_extal32}$	Externally provided input clock amplitude	700	—	V_{DD}	mV	2, 3

1. Proper PC board layout procedures must be followed to acheive specifications.
2. This specification is for an externally supplied clock driven to EXTAL32 and does not apply to any other clock input. The oscillator remains enabled and XTAL32 must be left unconnected.
3. The parameter specified is a peak-to-peak value and V_{IH} and V_{IL} specifications do not apply. The voltage of the applied clock must be within the range of V_{SS} to V_{DD}.

7.5.4 Memories and memory interfaces

7.5.4.1 Flash electrical specifications

This section describes the electrical characteristics of the flash memory module.

7.5.4.1.1 Flash timing specifications — program and erase

The following specifications represent the amount of time the internal charge pumps are active and do not include command overhead.

Table 27. NVM program/erase timing specifications

Symbol	Description	Min.	Typ.	Max.	Unit	Notes
t_{hvpgm4}	Longword Program high-voltage time	—	7.5	18	µs	—
$t_{hversscr}$	Sector Erase high-voltage time	—	13	113	ms	1
$t_{hversblk256k}$	Erase Block high-voltage time for 256 KB	—	104	904	ms	1

1. Maximum time based on expectations at cycling end-of-life.

7.5.4.1.2 Flash timing specifications — commands

Table 28. Flash command timing specifications

Symbol	Description	Min.	Typ.	Max.	Unit	Notes
$t_{rd1blk256k}$	Read 1s Block execution time • 256 KB program flash	—	—	1.7	ms	1
$t_{rd1sec2k}$	Read 1s Section execution time (flash sector)	—	—	60	μs	1
t_{pgmchk}	Program Check execution time	—	—	45	μs	1
t_{rdrsrc}	Read Resource execution time	—	—	30	μs	1
t_{pgm4}	Program Longword execution time	—	65	145	μs	—
$t_{ersblk256k}$	Erase Flash Block execution time • 256 KB program flash	—	250	1500	ms	2
t_{ersscr}	Erase Flash Sector execution time	—	14	114	ms	2
t_{rd1all}	Read 1s All Blocks execution time	—	—	1.8	ms	1
t_{rdonce}	Read Once execution time	—	—	30	μs	1
$t_{pgmonce}$	Program Once execution time	—	100	—	μs	—
t_{ersall}	Erase All Blocks execution time	—	500	3000	ms	2
t_{vfykey}	Verify Backdoor Access Key execution time	—	—	30	μs	1
$t_{ersallu}$	Erase All Blocks Unsecure execution time	—	500	3000	ms	2

1. Assumes 25 MHz flash clock frequency.
2. Maximum times for erase parameters based on expectations at cycling end-of-life.

7.5.4.1.3 Flash high voltage current behaviors

Table 29. Flash high voltage current behaviors

Symbol	Description	Min.	Typ.	Max.	Unit
I_{DD_PGM}	Average current adder during high voltage flash programming operation	—	2.5	6.0	mA
I_{DD_ERS}	Average current adder during high voltage flash erase operation	—	1.5	4.0	mA

7.5.4.1.4 Reliability specifications

Table 30. NVM reliability specifications

Symbol	Description	Min.	Typ.[1]	Max.	Unit	Notes
Program Flash						
$t_{nvmretp10k}$	Data retention after up to 10 K cycles	5	50	—	years	—
$t_{nvmretp1k}$	Data retention after up to 1 K cycles	20	100	—	years	—
$n_{nvmcycp}$	Cycling endurance	10 K	50 K	—	cycles	2

1. Typical data retention values are based on measured response accelerated at high temperature and derated to a constant 25 °C use profile. Engineering Bulletin EB618 does not apply to this technology. Typical endurance defined in Engineering Bulletin EB619.
2. Cycling endurance represents number of program/erase cycles at –40 °C ≤ T_j ≤ 125 °C.

7.5.5 Security and integrity modules

There are no specifications necessary for the device's security and integrity modules.

7.5.6 Analog

7.5.6.1 ADC electrical specifications

All other ADC channels meet the 13-bit differential/12-bit single-ended accuracy specifications. The following specification is defined with the DC-DC converter operating in Bypass mode.

7.5.6.1.1 16-bit ADC operating conditions

Table 31. 16-bit ADC operating conditions

Symbol	Description	Conditions	Min.	Typ.[1]	Max.	Unit	Notes
V_{DDA}	Supply voltage	Absolute	1.71	—	3.6	V	
ΔV_{DDA}	Supply voltage	Delta to V_{DD} ($V_{DD} – V_{DDA}$)	-100	0	+100	mV	2
ΔV_{SSA}	Ground voltage	Delta to V_{SS} ($V_{SS} – V_{SSA}$)	-100	0	+100	mV	2
V_{REFH}	ADC reference voltage high		1.13	V_{DDA}	V_{DDA}	V	3
V_{REFL}	ADC reference voltage low		V_{SSA}	V_{SSA}	V_{SSA}	V	3
V_{ADIN}	Input voltage	• 16-bit differential mode • All other modes	VSSA VSSA	— —	31/32 × VREFH VREFH	V	
C_{ADIN}	Input capacitance	• 16-bit mode • 8-bit / 10-bit / 12-bit modes	— —	8 4	10 5	pF	
R_{ADIN}	Input series resistance		—	2	5	kΩ	
R_{AS}	Analog source resistance (external)	13-bit / 12-bit modes f_{ADCK} < 4 MHz	—	—	5	kΩ	4
f_{ADCK}	ADC conversion clock frequency	≤ 13-bit mode	1.0	—	18.0	MHz	5

Table continues on the next page...

Table 31. 16-bit ADC operating conditions (continued)

Symbol	Description	Conditions	Min.	Typ.[1]	Max.	Unit	Notes
f_{ADCK}	ADC conversion clock frequency	16-bit mode	2.0	—	12.0	MHz	5
C_{rate}	ADC conversion rate	≤ 13-bit modes No ADC hardware averaging Continuous conversions enabled, subsequent conversion time	20.000	—	818.330	kS/s	6
C_{rate}	ADC conversion rate	16-bit mode No ADC hardware averaging Continuous conversions enabled, subsequent conversion time	37.037	—	461.467	kS/s	6

1. Typical values assume V_{DDA} = 3.0 V, Temp = 25 °C, f_{ADCK} = 1.0 MHz, unless otherwise stated. Typical values are for reference only, and are not tested in production.
2. DC potential difference.
3. For packages without dedicated VREFH and VREFL pins, V_{REFH} is internally tied to V_{DDA}, and V_{REFL} is internally tied to V_{SSA}.
4. This resistance is external to MCU. To achieve the best results, the analog source resistance must be kept as low as possible. The results in this data sheet were derived from a system that had < 8 Ω analog source resistance. The R_{AS}/C_{AS} time constant should be kept to < 1 ns.
5. To use the maximum ADC conversion clock frequency, CFG2[ADHSC] must be set and CFG1[ADLPC] must be clear.
6. For guidelines and examples of conversion rate calculation, download the ADC calculator tool.

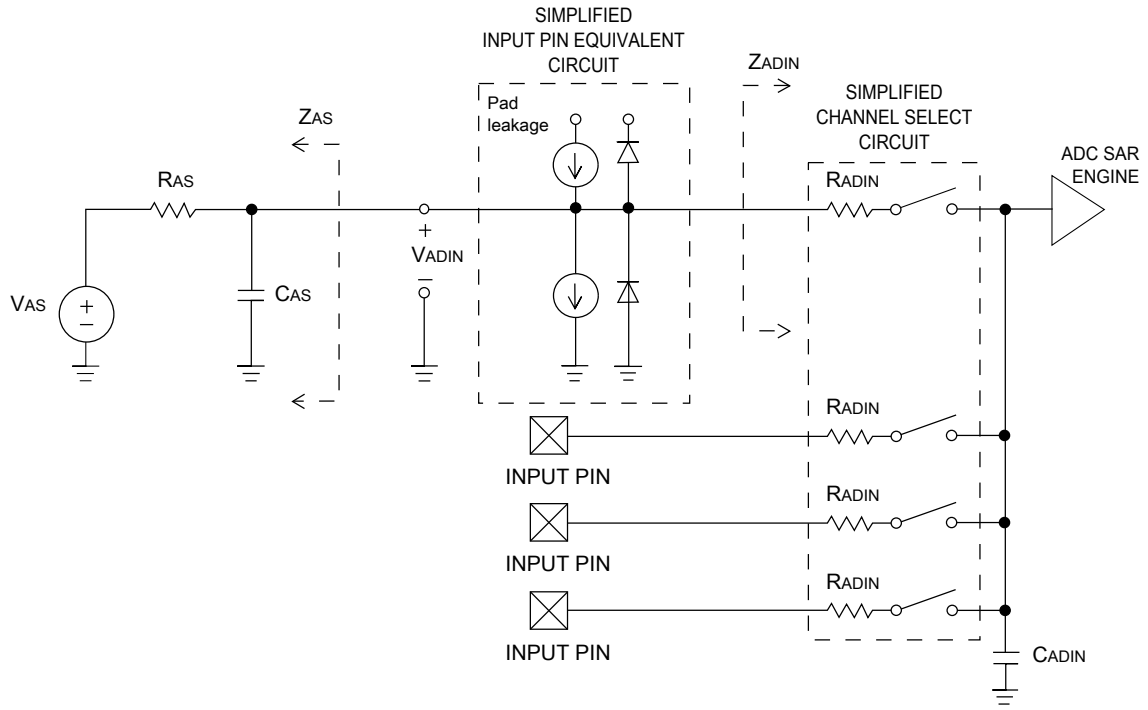

Figure 9. ADC input impedance equivalency diagram

7.5.6.1.2 16-bit ADC electrical characteristics

Table 32. 16-bit ADC characteristics ($V_{REFH} = V_{DDA}$, $V_{REFL} = V_{SSA}$)

Symbol	Description	Conditions[1]	Min.	Typ.[2]	Max.	Unit	Notes
I_{DDA_ADC}	Supply current		0.215	—	1.7	mA	3
f_{ADACK}	ADC asynchronous clock source	• ADLPC=1, ADHSC=0 • ADLPC=1, ADHSC=1 • ADLPC=0, ADHSC=0 • ADLPC=0, ADHSC=1	1.2 2.4 3.0 4.4	2.4 4.0 5.2 6.2	3.9 6.1 7.3 9.5	MHz	$t_{ADACK} = 1/f_{ADACK}$
	Sample Time	See Reference Manual chapter for sample times					
TUE	Total unadjusted error	• 12-bit modes • <12-bit modes	— —	±4 ±1.4	±6.8 ±2.1	LSB[4]	5
DNL	Differential non-linearity	• 12-bit mode; Buck Mode[6] • 12-bit mode; Boost Mode[6] • 12-bit mode; Bypass Mode	— — —	±0.7 ±0.5 ±0.5	–1.1 to +1.9 –1.1 to +1.9 –1.1 to +1.9	LSB[4]	5
INL	Integral non-linearity	• 12-bit mode; Buck Mode[6] • 12-bit mode; Boost Mode[6] • 12-bit mode; Bypass Mode	— — —	±1.0 ±0.7 ±0.6	–2.7 to +1.9 –2.7 to +1.9 –2.7 to +1.9	LSB[4]	5
E_{FS}	Full-scale error	• 12-bit modes • <12-bit modes	— —	–4 –1.4	–5.4 –1.8	LSB[4]	$V_{ADIN} = V_{DDA}$[5]
E_Q	Quantization error	• 16-bit modes • ≤13-bit modes	— —	–1 to 0 —	— ±0.5	LSB[4]	
ENOB	Effective number of bits	16-bit differential mode; Buck Mode[6] • Avg = 32 • Avg = 4 16-bit single-ended mode; Buck Mode[6] • Avg = 32 • Avg = 4 16-bit differential mode; Boost Mode[6] • Avg = 32 • Avg = 4	 12 11.25 11 9.5 11.5 9.75	 12.75 11.75 11.5 10.5 12 11	 — — — — — —	bits	7

Table continues on the next page...

Table 32. 16-bit ADC characteristics ($V_{REFH} = V_{DDA}$, $V_{REFL} = V_{SSA}$) (continued)

Symbol	Description	Conditions[1]	Min.	Typ.[2]	Max.	Unit	Notes
		16-bit single-ended mode; Boost Mode[6]					
		• Avg = 32	11	11.5	—		
		• Avg = 4	9.75	10.5	—		
		16-bit differential mode; Bypass Mode					
		• Avg = 32	12.5	13	—		
		• Avg = 4	11.25	12	—		
		16-bit single-ended mode; Bypass Mode					
		• Avg = 32	11	11.75	—		
		• Avg = 4	10	10.5	—		
SINAD	Signal-to-noise plus distortion	See ENOB	6.02 × ENOB + 1.76			dB	
THD	Total harmonic distortion	16-bit differential mode; Buck Mode[6]					8
		• Avg = 32	—	-90	—	dB	
		16-bit single-ended mode; Buck Mode[6]					
		• Avg = 32	—	-88	—		
		16-bit differential mode; Boost Mode[6]					
		• Avg = 32	—	-89	—		
		16-bit single-ended mode; Boost Mode[6]					
		• Avg = 32	—	-89	—		
		16-bit differential mode; Bypass Mode					
		• Avg = 32	—	-89	—		
		16-bit single-ended mode; Bypass Mode					
		• Avg = 32	—	-87	—		
SINAD	Signal-to-noise plus distortion	See ENOB	6.02 × ENOB + 1.76			dB	
SFDR	Spurious free dynamic range distortion	16-bit differential mode; Buck Mode[6]					8
		• Avg = 32	85	89	—	dB	
		16-bit single-ended mode; Buck Mode[6]					

Table continues on the next page...

Table 32. 16-bit ADC characteristics ($V_{REFH} = V_{DDA}$, $V_{REFL} = V_{SSA}$) (continued)

Symbol	Description	Conditions[1]	Min.	Typ.[2]	Max.	Unit	Notes
		• Avg = 32 16-bit differential mode; Boost Mode[6]	85	87	—		
		• Avg = 32 16-bit single-ended mode; Boost Mode[6]	78	86	—		
		• Avg = 32 16-bit differential mode; Bypass Mode	85	87	—		
		• Avg = 32 16-bit single-ended mode; Bypass Mode	87	94	—		
		• Avg = 32	85	88	—		
E_{IL}	Input leakage error		$I_{In} \times R_{AS}$			mV	I_{In} = leakage current (see Voltage and current operating ratings)
	Temp sensor slope	Across the full temperature range of the device	1.67	1.74	1.81	mV/°C	9
V_{TEMP25}	Temp sensor voltage	25 °C	706	716	726	mV	9

1. All accuracy numbers assume the ADC is calibrated with $V_{REFH} = V_{DDA}$.
2. Typical values assume V_{DDA} = 3.0 V, Temp = 25 °C, f_{ADCK} = 2.0 MHz unless otherwise stated. Typical values are for reference only and are not tested in production.
3. The ADC supply current depends on the ADC conversion clock speed, conversion rate and ADC_CFG1[ADLPC] (low power). For lowest power operation, ADC_CFG1[ADLPC] must be set, the ADC_CFG2[ADHSC] bit must be clear with 1 MHz ADC conversion clock speed.
4. 1 LSB = $(V_{REFH} - V_{REFL})/2^N$.
5. ADC conversion clock < 16 MHz, maximum hardware averaging (AVGE = %1, AVGS = %11).
6. VREFH = Output of Voltage Reference(VREF).
7. Input data is 100 Hz sine wave. ADC conversion clock < 12 MHz.
8. Input data is 1 kHz sine wave. ADC conversion clock < 12 MHz.
9. ADC conversion clock < 3 MHz.

7.5.6.2 Voltage reference electrical specifications

Table 33. VREF full-range operating requirements

Symbol	Description	Min.	Max.	Unit	Notes
V_{DDA}	Supply voltage	1.71	3.6	V	
T_A	Temperature	-40 to 105		°C	
C_L	Output load capacitance	100		nF	1, 2

1. C_L must be connected to VREF_OUT if the VREF_OUT functionality is being used for either an internal or external reference.
2. The load capacitance should not exceed +/-25% of the nominal specified C_L value over the operating temperature range of the device.

Table 34. VREF full-range operating behaviors

Symbol	Description	Min.	Typ.	Max.	Unit	Notes
V_{out}	Voltage reference output with factory trim at nominal V_{DDA} and temperature=25°C	1.190	1.1950	1.2	V	1
V_{out}	Voltage reference output with user trim at nominal V_{DDA} and temperature=25°C	1.1945	1.1950	1.1955	V	1
V_{step}	Voltage reference trim step	—	0.5	—	mV	1
V_{tdrift}	Temperature drift (V_{max} -V_{min} across the full temperature range)	—	—	20	mV	1
I_{bg}	Bandgap only current	—	—	80	μA	
I_{lp}	Low-power buffer current	—	—	360	uA	1
I_{hp}	High-power buffer current	—	—	1	mA	1
ΔV_{LOAD}	Load regulation • current = ± 1.0 mA	— —	 200	 —	μV	1, 2
T_{stup}	Buffer startup time	—	—	100	μs	
$T_{chop_osc_stup}$	Internal bandgap start-up delay with chop oscillator enabled	—	—	35	ms	
V_{vdrift}	Voltage drift (V_{max} -V_{min} across the full voltage range)	—	2	—	mV	1

1. See the chip's Reference Manual for the appropriate settings of the VREF Status and Control register.
2. Load regulation voltage is the difference between the VREF_OUT voltage with no load vs. voltage with defined load

Table 35. VREF limited-range operating requirements

Symbol	Description	Min.	Max.	Unit	Notes
T_A	Temperature	0	70	°C	

Table 36. VREF limited-range operating behaviors

Symbol	Description	Min.	Max.	Unit	Notes
V_{tdrift}	Temperature drift (V_{max} -V_{min} across the limited temperature range)	—	15	mV	

7.5.6.3 CMP and 6-bit DAC electrical specifications

Table 37. Comparator and 6-bit DAC electrical specifications

Symbol	Description	Min.	Typ.	Max.	Unit
V_{DD}	Supply voltage	1.71	—	3.6	V
I_{DDHS}	Supply current, High-speed mode (EN=1, PMODE=1)	—	—	200	μA
I_{DDLS}	Supply current, low-speed mode (EN=1, PMODE=0)	—	—	20	μA
V_{AIN}	Analog input voltage	V_{SS} – 0.3	—	V_{DD}	V
V_{AIO}	Analog input offset voltage	—	—	20	mV
V_H	Analog comparator hysteresis[1]				
	• CR0[HYSTCTR] = 00	—	5	—	mV
	• CR0[HYSTCTR] = 01	—	10	—	mV
	• CR0[HYSTCTR] = 10	—	20	—	mV
	• CR0[HYSTCTR] = 11	—	30	—	mV
V_{CMPOh}	Output high	V_{DD} – 0.5	—	—	V
V_{CMPOl}	Output low	—	—	0.5	V
t_{DHS}	Propagation delay, high-speed mode (EN=1, PMODE=1)	20	50	200	ns
t_{DLS}	Propagation delay, low-speed mode (EN=1, PMODE=0)	80	250	600	ns
	Analog comparator initialization delay[2]	—	—	40	μs
I_{DAC6b}	6-bit DAC current adder (enabled)	—	7	—	μA
INL	6-bit DAC integral non-linearity	–0.5	—	0.5	LSB[3]
DNL	6-bit DAC differential non-linearity	–0.3	—	0.3	LSB

1. Typical hysteresis is measured with input voltage range limited to 0.6 to V_{DD}–0.6 V.
2. Comparator initialization delay is defined as the time between software writes to change control inputs (Writes to CMP_DACCR[DACEN], CMP_DACCR[VRSEL], CMP_DACCR[VOSEL], CMP_MUXCR[PSEL], and CMP_MUXCR[MSEL]) and the comparator output settling to a stable level.
3. 1 LSB = $V_{reference}/64$

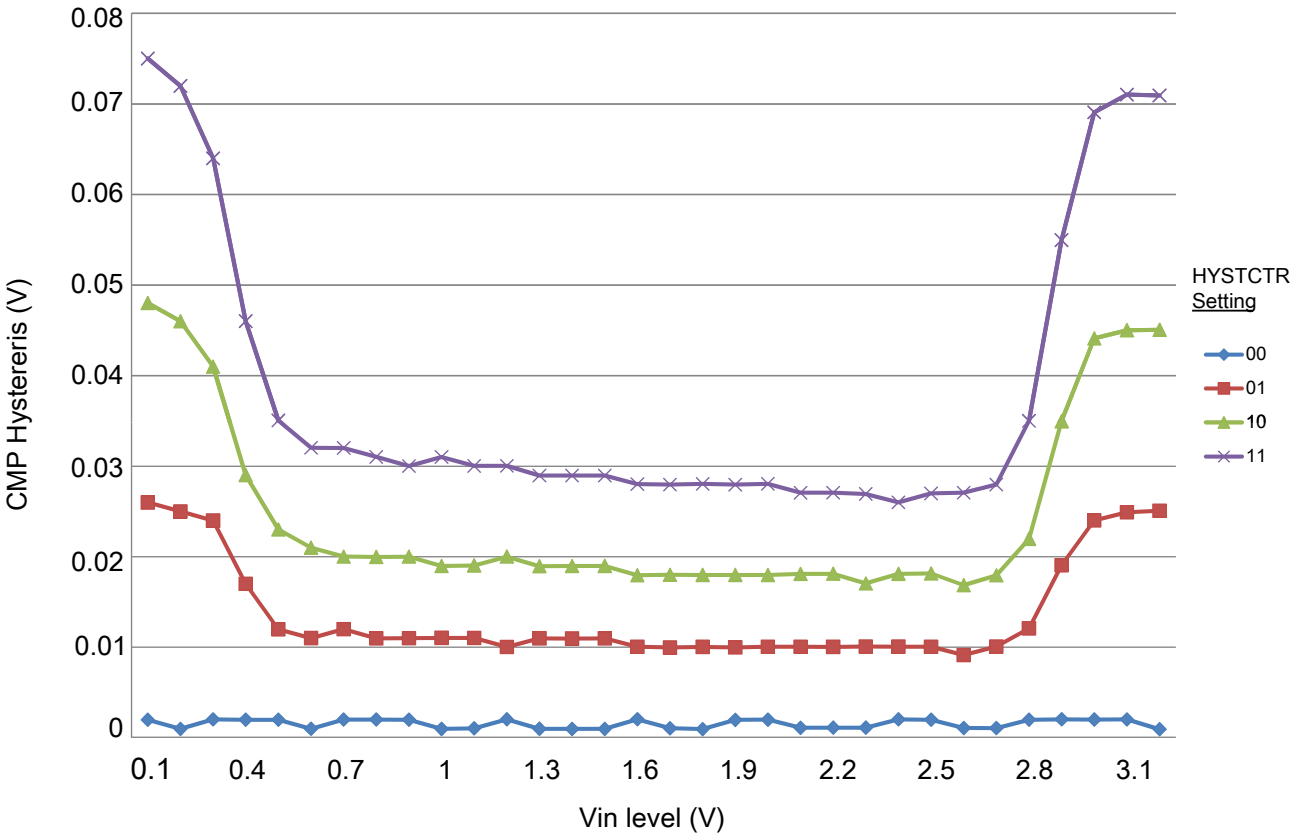

Figure 10. Typical hysteresis vs. Vin level (VDD = 3.3 V, PMODE = 0)

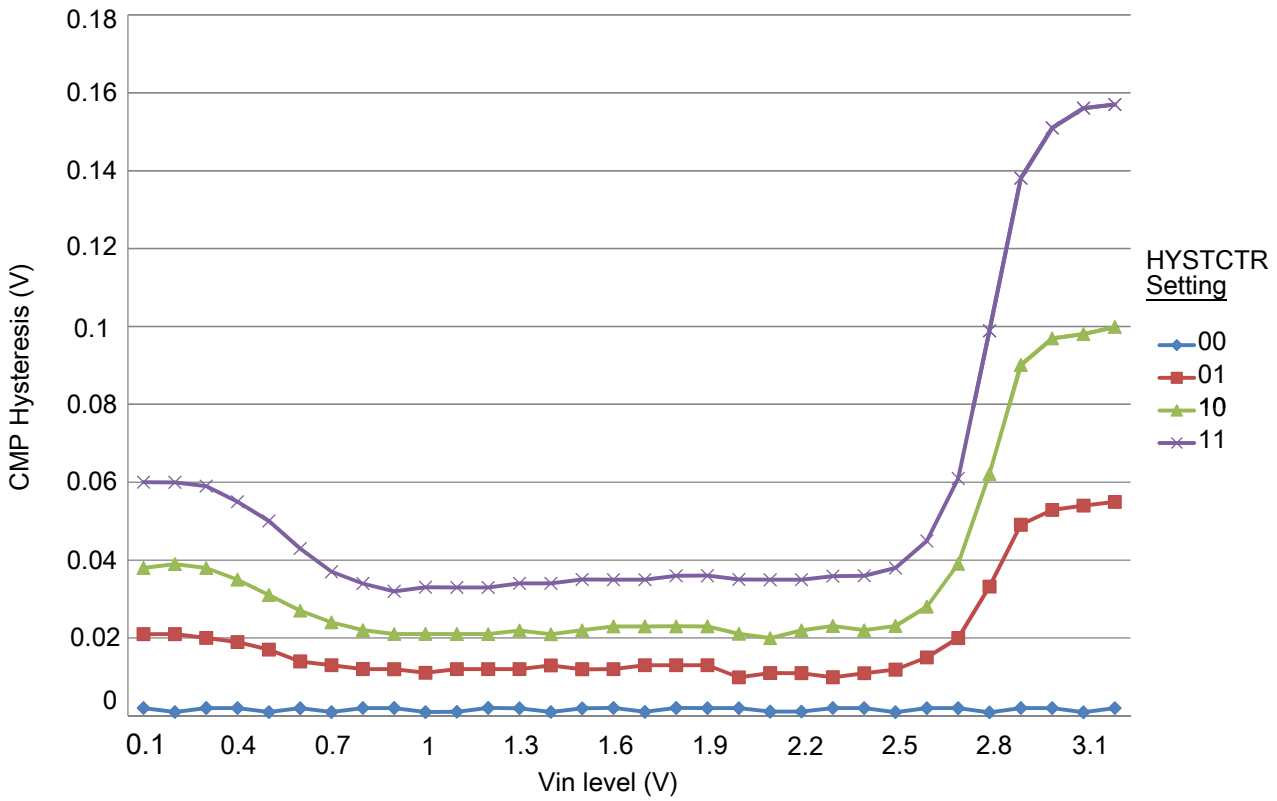

Figure 11. Typical hysteresis vs. Vin level (VDD = 3.3 V, PMODE = 1)

7.5.6.4 12-bit DAC electrical characteristics

7.5.6.4.1 12-bit DAC operating requirements

Table 38. 12-bit DAC operating requirements

Symbol	Desciption	Min.	Max.	Unit	Notes
V_{DDA}	Supply voltage	1.71	3.6	V	
V_{DACR}	Reference voltage	1.13	3.6	V	1
C_L	Output load capacitance	—	100	pF	2
I_L	Output load current	—	1	mA	

1. The DAC reference can be selected to be V_{DDA} or V_{REF_OUT}.
2. A small load capacitance (47 pF) can improve the bandwidth performance of the DAC.

7.5.6.4.2 12-bit DAC operating behaviors

Table 39. 12-bit DAC operating behaviors

Symbol	Description	Min.	Typ.	Max.	Unit	Notes
I_{DDA_DACLP}	Supply current — low-power mode	—	—	250	μA	
I_{DDA_DACHP}	Supply current — high-speed mode	—	—	900	μA	
t_{DACLP}	Full-scale settling time (0x080 to 0xF7F) — low-power mode	—	100	200	μs	1
t_{DACHP}	Full-scale settling time (0x080 to 0xF7F) — high-power mode	—	15	30	μs	1
$t_{CCDACLP}$	Code-to-code settling time (0xBF8 to 0xC08) — low-power mode and high-speed mode	—	0.7	1	μs	1
$V_{dacoutl}$	DAC output voltage range low — high-speed mode, no load, DAC set to 0x000	—	—	100	mV	
$V_{dacouth}$	DAC output voltage range high — high-speed mode, no load, DAC set to 0xFFF	V_{DACR} −100	—	V_{DACR}	mV	
INL	Integral non-linearity error — high speed mode	—	—	±8	LSB	2
DNL	Differential non-linearity error — V_{DACR} > 2 V	—	—	±1	LSB	3
DNL	Differential non-linearity error — V_{DACR} = VREF_OUT	—	—	±1	LSB	4
V_{OFFSET}	Offset error	—	±0.4	±0.8	%FSR	5
E_G	Gain error	—	±0.1	±0.6	%FSR	5
PSRR	Power supply rejection ratio, V_{DDA} ≥ 2.4 V	60	—	90	dB	
T_{CO}	Temperature coefficient offset voltage	—	3.7	—	μV/C	6
T_{GE}	Temperature coefficient gain error	—	0.000421	—	%FSR/C	
Rop	Output resistance (load = 3 kΩ)	—	—	250	Ω	
SR	Slew rate -80h→ F7Fh→ 80h				V/μs	
	• High power (SP_{HP})	1.2	1.7	—		
	• Low power (SP_{LP})	0.05	0.12	—		
BW	3dB bandwidth				kHz	
	• High power (SP_{HP})	550	—	—		
	• Low power (SP_{LP})	40	—	—		

1. Settling within ±1 LSB
2. The INL is measured for 0 + 100 mV to V_{DACR} −100 mV
3. The DNL is measured for 0 + 100 mV to V_{DACR} −100 mV
4. The DNL is measured for 0 + 100 mV to V_{DACR} −100 mV with V_{DDA} > 2.4 V
5. Calculated by a best fit curve from V_{SS} + 100 mV to V_{DACR} − 100 mV
6. V_{DDA} = 3.0 V, reference select set for V_{DDA} (DACx_CO:DACRFS = 1), high power mode (DACx_C0:LPEN = 0), DAC set to 0x800, temperature range is across the full range of the device

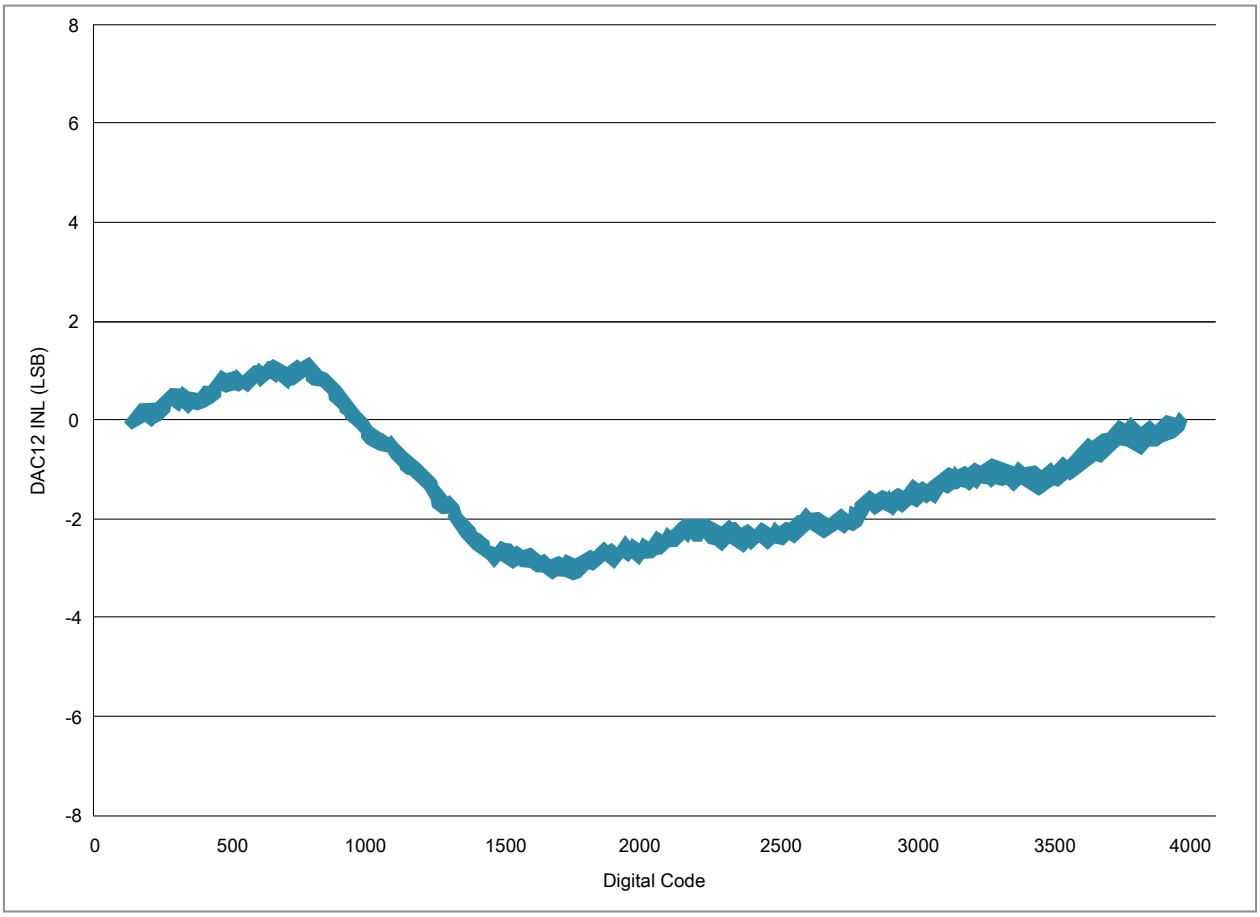

Figure 12. Typical INL error vs. digital code

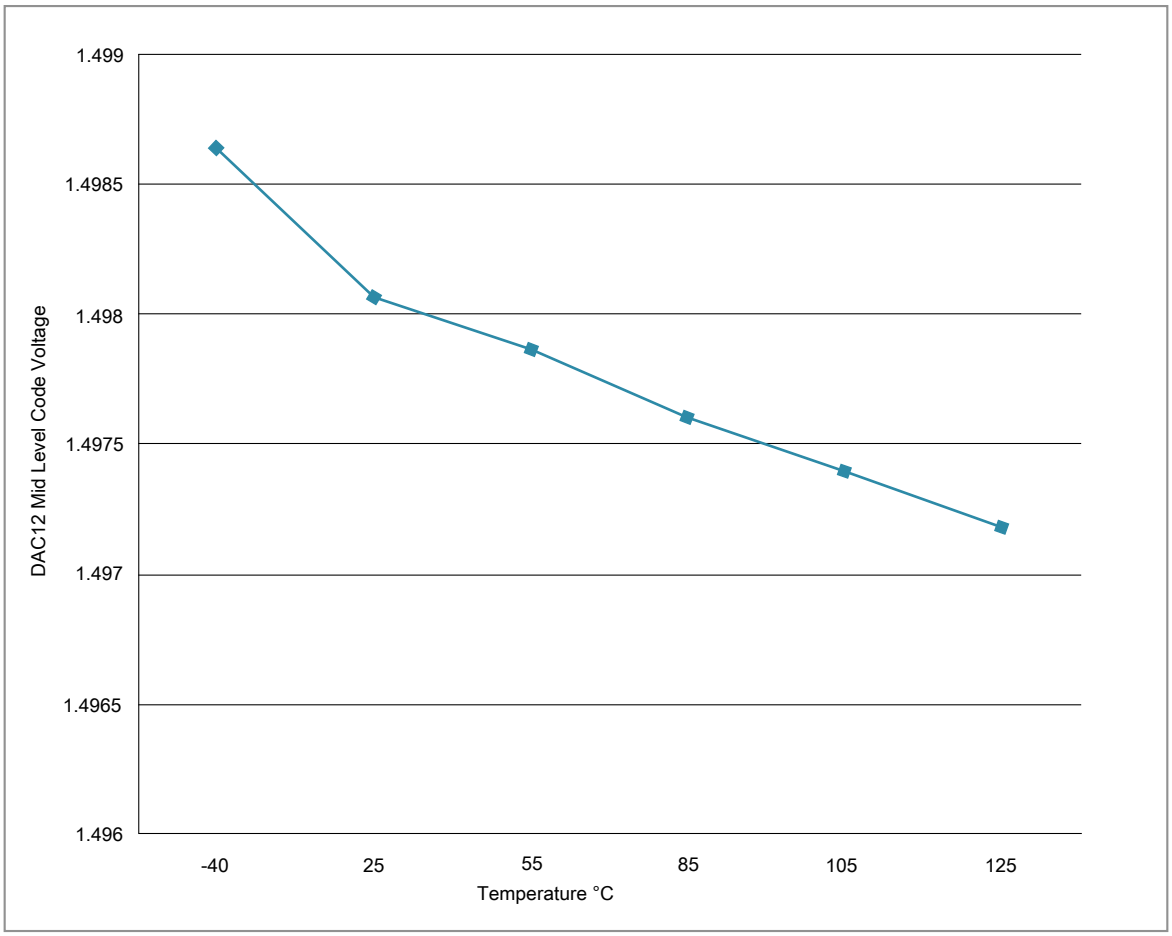

Figure 13. Offset at half scale vs. temperature

7.5.7 Timers

See General switching specifications.

7.5.8 Communication interfaces

7.5.8.1 DSPI switching specifications (limited voltage range)

The DMA Serial Peripheral Interface (DSPI) provides a synchronous serial bus with master and slave operations. Many of the transfer attributes are programmable. The tables below provide DSPI timing characteristics for classic SPI timing modes. See the DSPI chapter of the Reference Manual for information on the modified transfer formats used for communicating with slower peripheral devices.

Table 40. Master mode DSPI timing (limited voltage range)

Num	Description	Min.	Max.	Unit	Notes
	Operating voltage	2.7	3.6	V	
	Frequency of operation	—	12	MHz	
DS1	DSPI_SCK output cycle time	2 x t_{BUS}	—	ns	
DS2	DSPI_SCK output high/low time	(t_{SCK}/2) – 2	(t_{SCK}/2) + 2	ns	
DS3	DSPI_PCS*n* valid to DSPI_SCK delay	(t_{BUS} x 2) – 2	—	ns	1
DS4	DSPI_SCK to DSPI_PCS*n* invalid delay	(t_{BUS} x 2) – 2	—	ns	2
DS5	DSPI_SCK to DSPI_SOUT valid	—	8.5	ns	
DS6	DSPI_SCK to DSPI_SOUT invalid	-2	—	ns	
DS7	DSPI_SIN to DSPI_SCK input setup	16.2	—	ns	
DS8	DSPI_SCK to DSPI_SIN input hold	0	—	ns	

1. The delay is programmable in SPIx_CTARn[PCSSCK] and SPIx_CTARn[CSSCK].
2. The delay is programmable in SPIx_CTARn[PASC] and SPIx_CTARn[ASC].

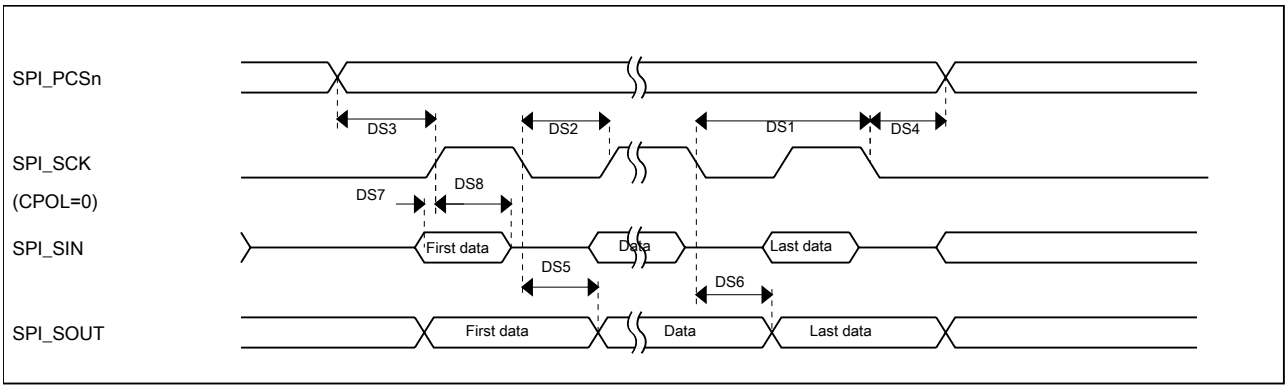

Figure 14. DSPI classic SPI timing — master mode

Table 41. Slave mode DSPI timing (limited voltage range)

Num	Description	Min.	Max.	Unit
	Operating voltage	2.7	3.6	V
	Frequency of operation		6	MHz

Table continues on the next page...

Table 41. Slave mode DSPI timing (limited voltage range) (continued)

Num	Description	Min.	Max.	Unit
DS9	DSPI_SCK input cycle time	4 x t_{BUS}	—	ns
DS10	DSPI_SCK input high/low time	(t_{SCK}/2) – 2	(t_{SCK}/2) + 2	ns
DS11	DSPI_SCK to DSPI_SOUT valid	—	21.4	ns
DS12	DSPI_SCK to DSPI_SOUT invalid	0	—	ns
DS13	DSPI_SIN to DSPI_SCK input setup	2.6	—	ns
DS14	DSPI_SCK to DSPI_SIN input hold	7.0	—	ns
DS15	$\overline{\text{DSPI_SS}}$ active to DSPI_SOUT driven	—	14	ns
DS16	$\overline{\text{DSPI_SS}}$ inactive to DSPI_SOUT not driven	—	14	ns

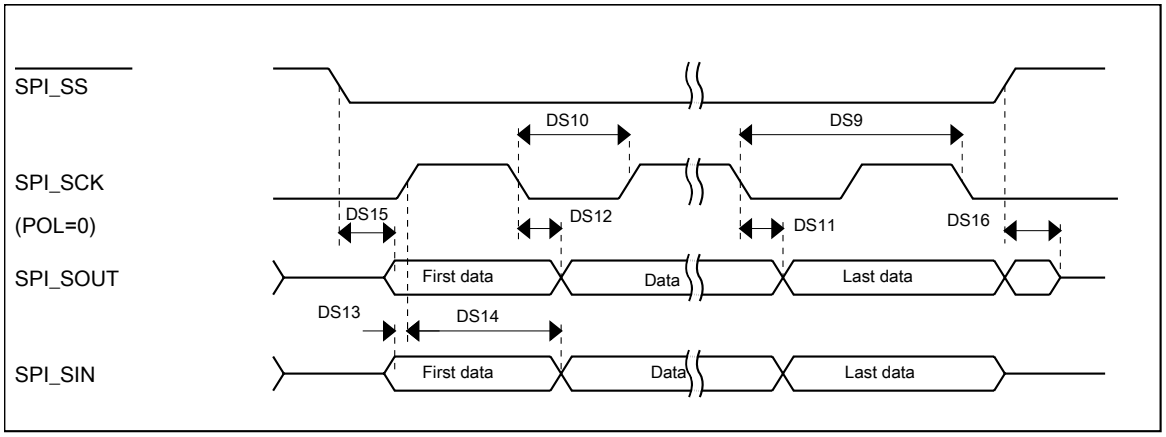

Figure 15. DSPI classic SPI timing — slave mode

7.5.8.2 DSPI switching specifications (full voltage range)

The DMA Serial Peripheral Interface (DSPI) provides a synchronous serial bus with master and slave operations. Many of the transfer attributes are programmable. The tables below provide DSPI timing characteristics for classic SPI timing modes. See the DSPI chapter of the Reference Manual for information on the modified transfer formats used for communicating with slower peripheral devices.

Table 42. Master mode DSPI timing (full voltage range)

Num	Description	Min.	Max.	Unit	Notes
	Operating voltage	1.71	3.6	V	1
	Frequency of operation	—	12	MHz	
DS1	DSPI_SCK output cycle time	2 x t_{BUS}	—	ns	
DS2	DSPI_SCK output high/low time	(t_{SCK}/2) - 4	($t_{SCK/2)}$ + 4	ns	

Table continues on the next page...

Table 42. Master mode DSPI timing (full voltage range) (continued)

Num	Description	Min.	Max.	Unit	Notes
DS3	DSPI_PCS*n* valid to DSPI_SCK delay	(t_{BUS} x 2) – 4	—	ns	2
DS4	DSPI_SCK to DSPI_PCS*n* invalid delay	(t_{BUS} x 2) – 4	—	ns	3
DS5	DSPI_SCK to DSPI_SOUT valid	—	10	ns	
DS6	DSPI_SCK to DSPI_SOUT invalid	-1.2	—	ns	
DS7	DSPI_SIN to DSPI_SCK input setup	23.3	—	ns	
DS8	DSPI_SCK to DSPI_SIN input hold	0	—	ns	

1. The DSPI module can operate across the entire operating voltage for the processor, but to run across the full voltage range the maximum frequency of operation is reduced.
2. The delay is programmable in SPIx_CTARn[PCSSCK] and SPIx_CTARn[CSSCK].
3. The delay is programmable in SPIx_CTARn[PASC] and SPIx_CTARn[ASC].

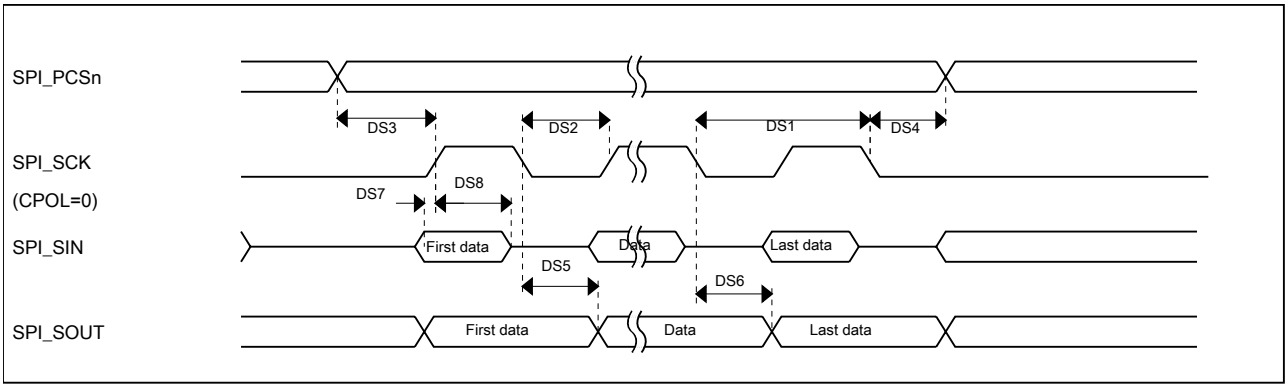

Figure 16. DSPI classic SPI timing — master mode

Table 43. Slave mode DSPI timing (full voltage range)

Num	Description	Min.	Max.	Unit
	Operating voltage	1.71	3.6	V
	Frequency of operation	—	6	MHz
DS9	DSPI_SCK input cycle time	4 x t_{BUS}	—	ns
DS10	DSPI_SCK input high/low time	(t_{SCK}/2) - 4	($t_{SCK/2)}$ + 4	ns
DS11	DSPI_SCK to DSPI_SOUT valid	—	29.1	ns
DS12	DSPI_SCK to DSPI_SOUT invalid	0	—	ns
DS13	DSPI_SIN to DSPI_SCK input setup	3.2	—	ns
DS14	DSPI_SCK to DSPI_SIN input hold	7.0	—	ns
DS15	$\overline{\text{DSPI_SS}}$ active to DSPI_SOUT driven	—	25	ns
DS16	$\overline{\text{DSPI_SS}}$ inactive to DSPI_SOUT not driven	—	25	ns

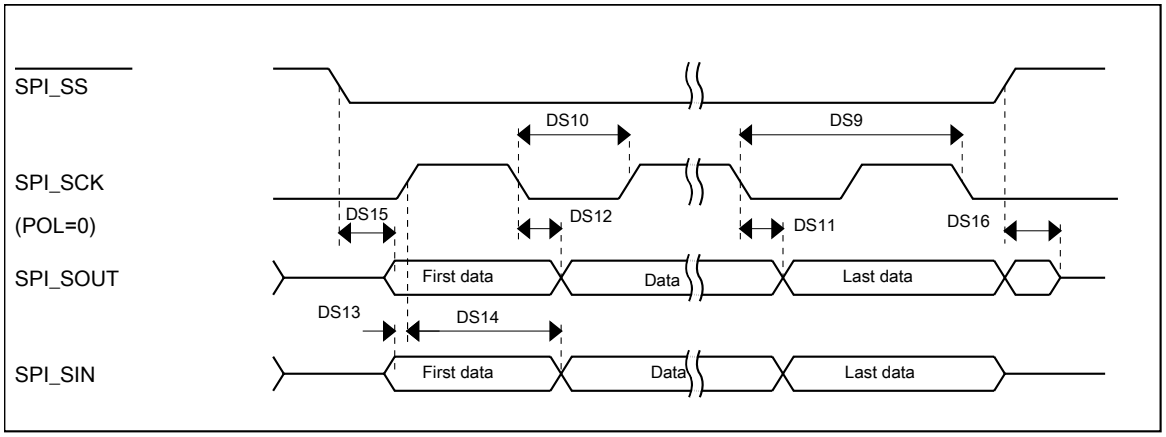

Figure 17. DSPI classic SPI timing — slave mode

7.5.8.3 Inter-Integrated Circuit Interface (I^2C) timing

Table 44. I^2C timing

Characteristic	Symbol	Standard Mode		Fast Mode		Unit
		Minimum	Maximum	Minimum	Maximum	
SCL Clock Frequency	f_{SCL}	0	100	0	400	kHz
Hold time (repeated) START condition. After this period, the first clock pulse is generated.	t_{HD}; STA	4	—	0.6	—	μs
LOW period of the SCL clock	t_{LOW}	4.7	—	1.3	—	μs
HIGH period of the SCL clock	t_{HIGH}	4	—	0.6	—	μs
Set-up time for a repeated START condition	t_{SU}; STA	4.7	—	0.6	—	μs
Data hold time for I^2C bus devices	t_{HD}; DAT	0[1]	3.45[2]	0[3]	0.9[1]	μs
Data set-up time	t_{SU}; DAT	250[4]	—	100[2, 5]	—	ns
Rise time of SDA and SCL signals	t_r	—	1000	20 +0.1C_b[6]	300	ns
Fall time of SDA and SCL signals	t_f	—	300	20 +0.1C_b[5]	300	ns
Set-up time for STOP condition	t_{SU}; STO	4	—	0.6	—	μs
Bus free time between STOP and START condition	t_{BUF}	4.7	—	1.3	—	μs
Pulse width of spikes that must be suppressed by the input filter	t_{SP}	N/A	N/A	0	50	ns

1. The master mode I^2C deasserts ACK of an address byte simultaneously with the falling edge of SCL. If no slaves acknowledge this address byte, then a negative hold time can result, depending on the edge rates of the SDA and SCL lines.
2. The maximum t_{HD}; DAT must be met only if the device does not stretch the LOW period (t_{LOW}) of the SCL signal.
3. Input signal Slew = 10 ns and Output Load = 50 pF.
4. Set-up time in slave-transmitter mode is 1 IP Bus clock period, if the TX FIFO is empty.
5. A Fast mode I^2C bus device can be used in a Standard mode I^2C bus system, but the requirement $t_{SU;\,DAT} \geq 250$ ns must then be met. This is automatically the case if the device does not stretch the LOW period of the SCL signal. If such

a device does stretch the LOW period of the SCL signal, then it must output the next data bit to the SDA line $t_{rmax} + t_{SU;DAT}$ = 1000 + 250 = 1250 ns (according to the Standard mode I²C bus specification) before the SCL line is released.

6. C_b = total capacitance of the one bus line in pF.

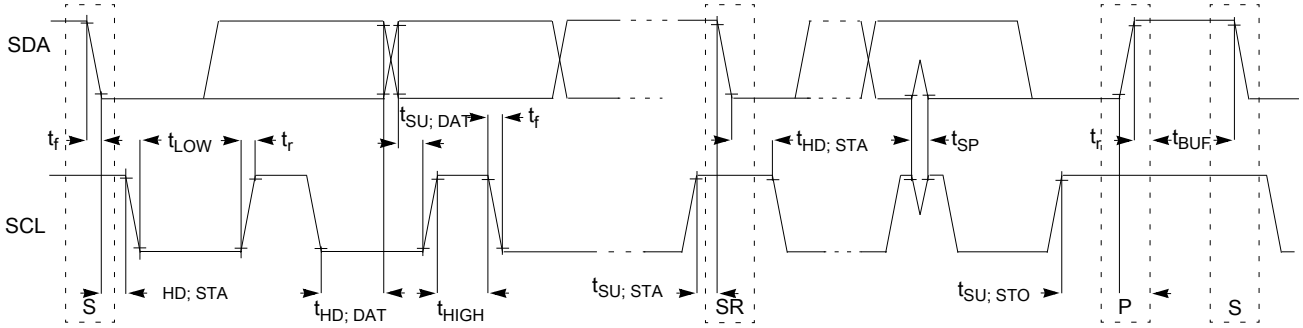

Figure 18. Timing definition for fast and standard mode devices on the I²C bus

7.5.8.4 LPUART

See General switching specifications.

7.5.9 Human-machine interfaces (HMI)

7.5.9.1 TSI electrical specifications

Table 45. TSI electrical specifications

Symbol	Description	Min.	Typ.	Max.	Unit
Ta	Temperature	-30	—	105	°C
TSI_RUNF	Fixed power consumption in run mode	—	100	—	μA
TSI_RUNV	Variable power consumption in run mode (depends on oscillator's current selection)	1.0	—	128	μA
TSI_EN	Power consumption in enable mode	—	100	—	μA
TSI_DIS	Power consumption in disable mode	—	1.2	—	μA
TSI_TEN	TSI analog enable time	—	66	—	μs
TSI_CREF	TSI reference capacitor	—	1.0	—	pF
TSI_DVOLT	Voltage variation of VP & VM around nominal values	0.19	—	1.03	V

7.5.9.2 GPIO

The maximum input voltage on PTC0/1/2/3 is VDD+0.3V. For rest of the GPIO specification, see General switching specifications.

7.6 DC-DC Converter Operating Requirements

Table 46. DC-DC Converter Recommended operating conditions

Characteristic	Symbol	Min	Typ	Max	Unit
Bypass Mode Supply Voltage (RF and Analog)	VDD_{RF1}, VDD_{RF2}, VDD_{RF3}	1.425	—	3.6	Vdc
Bypass Mode Supply Voltage (Digital)	VDD_X, V_{DCDC_IN}, VDD_A	1.71	—	3.6	Vdc
Boost Mode Supply Voltage [1]	VDD_{DCDC_IN}	1.1[2]	—	1.795	Vdc
Buck Mode Supply Voltage[3, 1, 4]	VDD_{DCDC_IN}	2.1	—	4.25	Vdc
External Inductor[5]	L_DCDC		10		uH
Inductor Resistance in Buck Mode	ESR	—	0.2	0.5	Ohms
Inductor Resistance in Boost Mode	ESR	—	—	0.2	Ohms

1. VDD_1P5 is 1.8 V by default in Boost mode. VDD_1P8OUT should supply to VDD_1, VDD_2 and VDD_A. VDD_1P5OUT_PMCIN should supply to VDD_RF_1 and VDD_RF_2. VDD_{XTAL} can be either supplied by 1.5 V or 1.8 V
2. In boost mode, DC-DC converter needs minimum 1.1 V to start, the supply can drop to 0.9 V after the DC-DC converter settles.
3. In Buck mode, DC-DC converter needs 2.1 V min to start, the supply can drop to 1.8 V after DC-DC converter settles
4. When 3.6 V < VDD_{DCDC_IN} / DCDC_CFG / PSWITCH <= 4.25 V, T_A and T_J are constrained to a maximum of +45 °C and +65 °C respectively (typical Li-ion maximum temperatures when charging). When VDD_{DCDC_IN} / DCDC_CFG / PSWITCH <= 3.6 V, T_A and T_J are constrained to a maximum of +105 °C and +125 °C respectively.
5. In both Buck and Boost modes, LN and LP are connected to external inductor. In boost mode, LP is also shorted to VDCDC_IN.

Table 47. DC-DC Converter Specifications

Characteristics	Conditions	Symbol	Min	Typ	Max	Unit
DC-DC Converter Output Power	Total power output of 1P8V and 1P5V	Pdcdc_out	—	—	125[1]	mW
Switching Frequency[2]		DCDC_FREQ	—	2	—	MHz
Half FET Threshold		I_half_FET	—	5	—	mA
Double FET Threshold		I_double_FET	—	40	—	mA
Boost Mode						
Enable Threshold		EN_THRESH_boost	-	50	-	mV
DC-DC Conversion Efficiency		DCDC_EFF_boost	-	90 %	-	
1.8 V Output Voltage		VDD_1P8_boost	1.71	1.8[3]	3.5	Vdc
1.8 V Output Current[4, 5]	VDD_1P8 = 1.8 V, VDCDC_IN = 1.7 V	IDD_1P8_boost1	—	—	45	mA

Table continues on the next page...

Table 47. DC-DC Converter Specifications (continued)

Characteristics	Conditions	Symbol	Min	Typ	Max	Unit
	VDD_1P8 = 3.0 V, VDCDC_IN = 1.7 V	IDD_1P8_boost2	—	—	27	mA
	VDD_1P8 = 1.8 V, VDCDC_IN = 0.9 V	IDD_1P8_boost3	—	—	20	mA
	VDD_1P8 = 3.0 V, VDCDC_IN = 0.9 V	IDD_1P8_boost4	—	—	10	mA
1.5V Output Voltage		VDD_1P5_boost	1.425[6, 7]	1.8[6, 7]	2.0	Vdc
1.5 V Output Current[4, 8]		VDD_1P5_boost	—	—	30	mA
DCDC Transition Operating Behavior	LSS➔Run	t_DCDCboost_LS S➔RUN	—	50	—	us
DCDC Turn on Time		$T_{DCDC_ON_boost}$	—	2.3[9]	—	ms
DCDC Settling Time for increasing voltage		$T_{DCDC_SETTLE_boost}$	—	0.271	—	ms
DCDC Settling Time for decreasing voltage	C = capacitance attached to the DCDC V1P8 output rail. V1 = the initial output voltage of the DCDC. V2 = the final output voltage of the DCDC. I2 = the load on the DCDC output expressed in Amperes.	$T_{DCDC_SETTLE_boost}$	—	(C*(V1-V2)/I2	—	s
Buck Mode						
DC-DC Conversion Efficiency		DCDC_EFF_buck	—	90 %	—	—
1.8 V Output Voltage		VDD_1P8_buck	1.71	—	min(VDCDC_IN_buck, 3.5)[10, 3]	Vdc
1.8 V Output Current[4, 5]	VDD_1P8 = 1.8 V, VDC_1P5 = 1.5 V	IDD_1P8_buck1	—	—	45	mA
	VDD_1P8 = 3.0 V, VDC_1P5 = 1.5 V	IDD_1P8_buck2	—	—	27	mA
1.5 V Output Voltage	Radio section requires 1.5 V	VDD_1P5_buck	1.425[11]	1.5[11]	1.65	Vdc
1.5 V Output Current[4, 8]		IDD_1P5_buck	—	—	30	mA

Table continues on the next page...

Table 47. DC-DC Converter Specifications (continued)

Characteristics	Conditions	Symbol	Min	Typ	Max	Unit
DCDC Transition Operating Behavior	LSS➔Run	t_DCDCbuck_LS S➔RUN	—	50	—	us
DCDC Turn on Time		$T_{DCDC_ON_buck}$	—	2.2[9]	—	ms
DCDC Settling Time for increasing voltage		$T_{DCDC_SETTLE_buck}$	—	0.371	—	ms
DCDC Settling Time for decreasing voltage	C = capacitance attached to the DCDC V1P8 output rail. V1 = the initial output voltage of the DCDC V2 = the final output voltage of the DCDC I2 = the load on the DCDC output expressed in Amperes.	$T_{DCDC_SETTLE_buck}$	—	(C*(V1-V2)/I2	—	s

1. This is the steady state DC output power. It requires VDCDC_IN >= 1.7V in boost mode. Excessive transient current load from external device will cause 1p8V and 1P5 output voltage unregulated temporary.
2. This is the frequency that will be observed at LN and LP pins.
3. The voltage output level can be controlled by programming DCDC_VDD1P8CTRL_TRG field in DCDC_REG3.
4. The output current specification in both buck and boost modes represents the maximum current the DC-DC converter can deliver. The MWPR1x24 radio and MCU blocks current consumption is not excluded. Note that the maxium output power of the DC-DC converter is 125mW. The available supply current for external device depends on the energy consumed by the internal peripherals in MWPR1x24.
5. When using DC-DC in low power mode(pulsed mode), current load must be less than 0.5 mA.
6. The minimum VDD_1P5_boost is the maximum of either what is programmed using DCDC_VDD1P5CTRL_TRG_BOOST field in DCDC_REG3 or VDCDC_IN_boost + 0.05V. For example, if VDCDC_IN = 0.9V, minimum VDD_1P5 is as programmed in DCDC_VDD1P5CTRL_ TRG_BOOST. If VDCDC_IN = 1.5V, minimum VDD_1P5 = 1.5 + 0.05V is 1.55V.
7. 1.8 V is the default value of the DC-DC 1.5 V output voltage in boost mode. The user can program DCDC_VDD1P5CTRL_TRG_BOOST field in register DCDC_REG3 to control 1.5 V output voltage level. For reliable radio operation, a voltage level of 1.425 V is required. VDD_1P5 must not be programmed higher than VDD_1P8.
8. 1.5 V is intended to supply power to MWPR1x24 only. It is not designed to supply power to an external device.
9. Turn on time is measured from the application of power (to DCDC_IN) to when the DCDC_REG0[DCDC_STS_DC_OK] bit is set. Code execution may begin before the DCDC_REG0[DCDC_STS_DC_OK] bit is set. Full device specification is not guaranteed until the bit sets.
10. In Buck mode, the maximum VDD_1P8 output is the minimum of either VDCDC_IN_BUCK minus 50 mV or 3.5 V. For example, if VDCDC_IN = 1.85V, maximum VDD_1P8 is 1.8V. If VDCDC_IN = 4.2V, maximum VDD_1P8 is 3V.
11. 1.5 V is the default value of DCDC VDD_1P5 in buck mode. The user can program DCDC_VDD1P5CTRL_TRG_BUCK field in register DCDC_REG3 to control 1P5 output voltage level. For Radio operation, minimum 1.425 V is required. VDD_1P5 must not be programmed higher than VDD_1P8.

7.7 Ratings

7.7.1 Thermal handling ratings

Table 48. Thermal handling ratings

Symbol	Description	Min.	Max.	Unit	Notes
T_{STG}	Storage temperature	–55	150	°C	1
T_{SDR}	Solder temperature, lead-free	—	260	°C	2

1. Determined according to JEDEC Standard JESD22-A103, *High Temperature Storage Life*.
2. Determined according to IPC/JEDEC Standard J-STD-020, *Moisture/Reflow Sensitivity Classification for Nonhermetic Solid State Surface Mount Devices*.

7.7.2 Moisture handling ratings

Table 49. Moisture handling ratings

Symbol	Description	Min.	Max.	Unit	Notes
MSL	Moisture sensitivity level	—	3	—	1

1. Determined according to IPC/JEDEC Standard J-STD-020, *Moisture/Reflow Sensitivity Classification for Nonhermetic Solid State Surface Mount Devices*.

7.7.3 ESD handling ratings

Table 50. ESD handling ratings

Symbol	Description	Min.	Max.	Unit	Notes
V_{HBM}	Electrostatic discharge voltage, human body model	–2000	+2000	V	1
V_{CDM}	Electrostatic discharge voltage, charged-device model	–500	+500	V	2
I_{LAT}	Latch-up current at ambient temperature of 105 °C	–100	+100	mA	3

1. Determined according to JEDEC Standard JESD22-A114, *Electrostatic Discharge (ESD) Sensitivity Testing Human Body Model (HBM)*.
2. Determined according to JEDEC Standard JESD22-C101, *Field-Induced Charged-Device Model Test Method for Electrostatic-Discharge-Withstand Thresholds of Microelectronic Components*.
3. Determined according to JEDEC Standard JESD78, *IC Latch-Up Test*.

7.7.4 Voltage and current operating ratings

Table 51. Voltage and current operating ratings

Symbol	Description	Min.	Max.	Unit
V_{DD}	Digital supply voltage	–0.3	3.8	V
I_{DD}	Digital supply current	—	120	mA
V_{IO}	IO pin input voltage	–0.3	V_{DD} + 0.3	V
I_D	Instantaneous maximum current single pin limit (applies to all port pins)	–25	25	mA
V_{DDA}	Analog supply voltage	V_{DD} – 0.3	V_{DD} + 0.3	V
V_{IO_DCDC}	IO pins in the DCDC voltage domain (DCDC_CFG and PSWITCH)	GND	VDCDC	V

8 Pin Diagrams and Pin Assignments

8.1 Pinouts

Device pinout are shown in figures below.

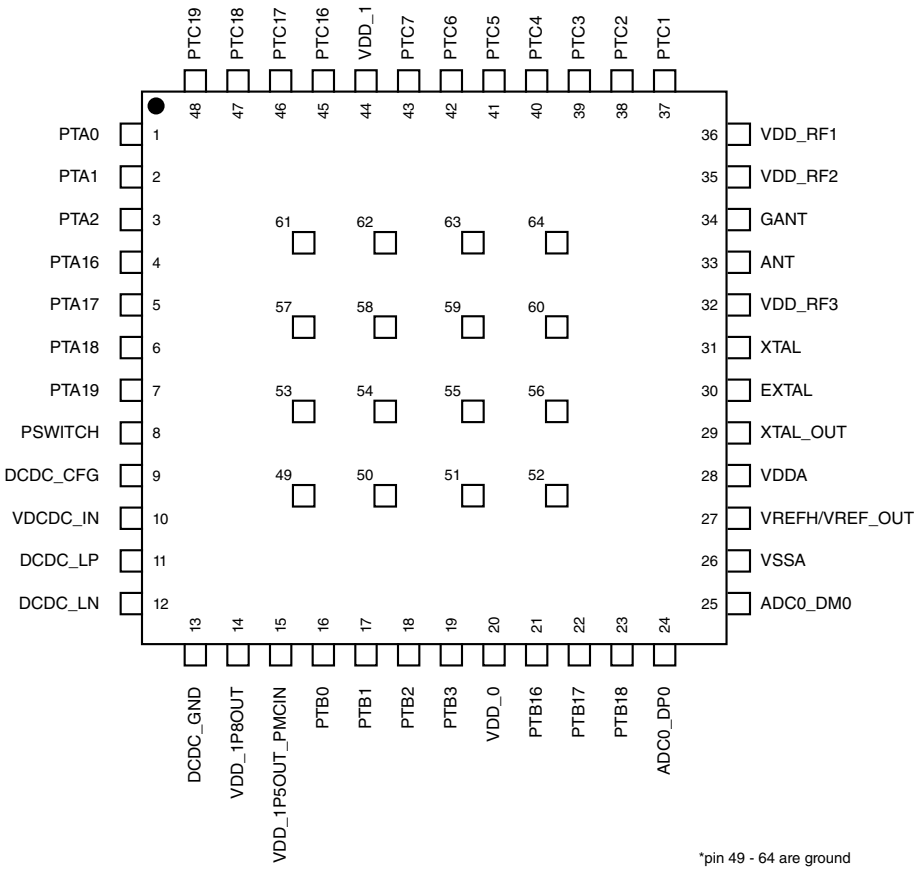

Figure 19. 48-pin Laminate QFN pinout diagram

8.2 Signal Multiplexing and Pin Assignments

The following table shows the signals available on each pin and locations of these pins on the packages supported by this device. The Port Control Module is responsible for selecting which ALT functional is available on each PTxy pin.

Table 52. MWPR1x24 Pin Assignments

MWPR1x24	Pin Name	DEFAULT	ALT0	ALT1	ALT2	ALT3	ALT4	ALT5	ALT6	ALT7
1	PTA0	SWD_DIO	TSIO_CH8	PTA0	SPI0_PCS1			TPM1_CH0		SWD_DIO
2	PTA1	SWD_CLK	TSI0_CH9	PTA1	SPI1_PCS0			TPM1_CH1		SWD_CLK
3	PTA2	RESET_b		PTA2				TPM0_CH3		RESET_b

Table continues on the next page...

Table 52. MWPR1x24 Pin Assignments (continued)

MWPR1x24	Pin Name	DEFAULT	ALT0	ALT1	ALT2	ALT3	ALT4	ALT5	ALT6	ALT7	
4	PTA16	DISABLED	TSI0_CH10	PTA16/LLWU_P4	SPI1_SOUT			TPM0_CH0			
5	PTA17	DISABLED	TSI0_CH11	PTA17/LLWU_P5/RF_RESET	SPI1_SIN			TPM_CLKIN1			
6	PTA18	DISABLED	TSI0_CH12	PTA18/LLWU_P6	SPI1_SCK			TPM2_CH0			
7	PTA19	DISABLED	TSI0_CH13/ADC0_SE5	PTA19/LLWU_P7	SPI1_PCS0			TPM2_CH1			
8	PSWITCH	PSWITCH	PSWITCH								
9	DCDC_CFG	DCDC_CFG	DCDC_CFG								
10	VDCDC_IN	VDCDC_IN	VDCDC_IN								
11	DCDC_LP	DCDC_LP	DCDC_LP								
12	DCDC_LN	DCDC_LN	DCDC_LN								
13	DCDC_GND	DCDC_GND	DCDC_GND								
14	VDD_1P8OUT	VDD_1P8OUT	VDD_1P8OUT								
15	VDD_1P5OUT_PMCIN	VDD_1P5OUT_PMCIN	VDD_1P5OUT_PMCIN								
16	PTB0	DISABLED		PTB0/LLWU_P8/XTAL_OUT_EN		I2C0_SCL	CMP0_OUT		TPM0_CH1		CLKOUT
17	PTB1	DISABLED	ADC0_SE1/CMP0_IN5	PTB1	DTM_RX	I2C0_SDA	LPTMR0_ALT1	TPM0_CH2		CMT_IRO	
18	PTB2	DISABLED	ADC0_SE3/CMP0_IN3	PTB2	RF_NOT_ALLOWED	DTM_TX		TPM1_CH0			

Table continues on the next page...

Table 52. MWPR1x24 Pin Assignments (continued)

MWPR1x24	Pin Name	DEFAULT	ALT0	ALT1	ALT2	ALT3	ALT4	ALT5	ALT6	ALT7
19	PTB3	DISABLED	ADC0_SE2/ CMP0_IN4	PTB3			CLKOUT	TPM1_CH1		RTC_CLKOUT
20	VDD_0	VDD_0	VDD_0							
21	PTB16	EXTAL32K	EXTAL32K	PTB16		I2C1_SCL		TPM2_CH0		
22	PTB17	XTAL32K	XTAL32K	PTB17		I2C1_SDA		TPM2_CH1		BSM_CLK
23	PTB18	NMI_b	DAC0_OUT/ ADC0_SE4/ CMP0_IN2	PTB18		I2C1_SCL	TPM_CLKIN0	TPM0_CH0		NMI_b
24	ADC0_DP0	ADC0_DP0/ CMP0_IN0	ADC0_DP0/ CMP0_IN0							
25	ADC0_DM0	ADC0_DM0/ CMP0_IN1	ADC0_DM0/ CMP0_IN1							
26	VSSA	VSSA	VSSA							
27	VREFH/ VREF_OUT	VREFH/ VREF_OUT	VREFH/ VREF_OUT							
28	VDDA	VDDA	VDDA							
29	XTAL_OUT	XTAL_OUT	XTAL_OUT							
30	EXTAL	EXTAL	EXTAL							
31	XTAL	XTAL	XTAL							
32	VDD_RF3	VDD_RF3	VDD_RF3							
33	ANT	ANT	ANT							
34	GANT	GANT	GANT							
35	VDD_RF2	VDD_RF2	VDD_RF2							
36	VDD_RF1	VDD_RF1	VDD_RF1							
37	PTC1	DISABLED		PTC1	ANT_B	I2C0_SDA	LPUART0_RTS_b	TPM0_CH2		Bluetooth LE_RF_ACTIVE

Table continues on the next page...

Table 52. MWPR1x24 Pin Assignments (continued)

MWPR1x24	Pin Name	DEFAULT	ALT0	ALT1	ALT2	ALT3	ALT4	ALT5	ALT6	ALT7
38	PTC2	DISABLED	TSI0_CH14/DIAG1	PTC2/LLWU_P10	TX_SWITCH	I2C1_SCL	LPUART0_RX	CMT_IRO		DTM_RX
39	PTC3	DISABLED	TSI0_CH15/DIAG2	PTC3/LLWU_P11	RX_SWITCH	I2C1_SDA	LPUART0_TX	TPM0_CH1		DTM_TX
40	PTC4	DISABLED	TSI0_CH0/DIAG3	PTC4/LLWU_P12	ANT_A	EXTRG_IN	LPUART0_CTS_b	TPM1_CH0		BSM_DATA
41	PTC5	DISABLED	TSI0_CH1/DIAG4	PTC5/LLWU_P13	RF_NOT_ALLOWED	LPTMR0_ALT2	LPUART0_RTS_b	TPM1_CH1		BSM_CLK
42	PTC6	DISABLED	TSI0_CH2	PTC6/LLWU_P14/XTAL_OUT_EN		I2C1_SCL	LPUART0_RX	TPM2_CH0		BSM_FRAME
43	PTC7	DISABLED	TSI0_CH3	PTC7/LLWU_P15	SPI0_PCS2	I2C1_SDA	LPUART0_TX	TPM2_CH1		BSM_DATA
44	VDD_1	VDD_1	VDD_1							
45	PTC16	DISABLED	TSI0_CH4	PTC16/LLWU_P0	SPI0_SCK	I2C0_SDA	LPUART0_RTS_b	TPM0_CH3		
46	PTC17	DISABLED	TSI0_CH5	PTC17/LLWU_P1	SPI0_SOUT	I2C1_SCL	LPUART0_RX	BSM_FRAME		DTM_RX
47	PTC18	DISABLED	TSI0_CH6	PTC18/LLWU_P2	SPI0_SIN	I2C1_SDA	LPUART0_TX	BSM_DATA		DTM_TX
48	PTC19	DISABLED	TSI0_CH7	PTC19/LLWU_P3	SPI0_PCS0	I2C0_SCL	LPUART0_CTS_b	BSM_CLK		Bluetooth LE_RF_ACTIVE
49-64	Ground	NA								

8.3 Module Signal Description Tables

The following sections correlate the chip-level signal name with the signal name used in the module's chapter. They also briefly describe the signal function and direction.

8.3.1 Core Modules

This section contains tables describing the core module signal descriptions.

Table 53. SWD Module Signal Descriptions

SoC Signal Name	Module Signal Name	Description	I/O
SWD_DIO	SWD_DIO	Serial Wire Debug Data Input/Output[1]	I/O
SWD_CLK	SWD_CLK	Serial Wire Clock[2]	I

1. Pulled up internally by default
2. Pulled down internally by default

8.3.2 Radio Modules

This section contains tables describing the radio signals.

Table 54. Radio Module Signal Descriptions

SoC Signal Name	Module Signal Name	Description	I/O
ANT	ANT	Antenna	O
GANT	GANT	Antenna ground	I
Bluetooth LE_RF_ACTIVE	Bluetooth LE_RF_ACTIVE	Signal to indicate future Bluetooth LE activity. Refer Bluetooth LE Link Layer for more details.	O
RF_NOT_ALLOWED	RF_NOT_ALLOWED	Radio off signal, intended for WiFi coexistence control	I
RF_RESET	RF_RESET	Radio reset signal	I
DTM_RX	DTM_RX	Direct Test Mode Receive	I
DTM_TX	DTM_TX	Direct Test Mode Transmit	O
BSM_CLK	BSM_CLK	Bit Streaming Mode (BSM) Clock signal	O
BSM_FRAME	BSM_FRAME	Bit Streaming Mode Frame signal	O
BSM_DATA	BSM_DATA	Bit Streaming Mode Data signal	I/O
ANT_A	ANT_A	Antenna selection A for Front End Module support	O
ANT_B	ANT_B	Antenna selection B for Front End Module support	O
TX_SWITCH	TX_SWITCH	Front End Module Transmit mode signal	O
RX_SWITCH	RX_SWITCH	Front End Module Receive mode signal	O

8.3.3 System Modules

This section contains tables describing the system signals.

Table 55. System Module Signal Descriptions

SoC Signal Name	Module Signal Name	Description	I/O
NMI_b	—	Non-maskable interrupt	I
RESET_b	—	Reset bidirectional signal	I/O
VDD_[1:0]	VDD	Power supply	I
Ground	VSS	Ground	I
VDD_RF[3:1]	VDD_RF	Radio power supply	I
VDCDC_IN	VDCDC_IN	VDCDC_IN	I
VDD_1P8OUT	VDD_1P8	DCDC 1.8 V Regulated Output / Input in bypass	I/O
VDD_1P5OUT_PMCIN	VDD_1P5/VDD_PMC	DCDC 1.5 V Regulated Output / PMC Input in bypass	I/O
PSWITCH	PSWITCH	DCDC enable switch	I
DCDC_CFG	DCDC_CFG	DCDC switch mode select	I
DCDC_LP	DCDC_LP	DCDC inductor input positive	I/O
DCDC_LN	DCDC_LN	DCDC inductor input negative	I/O
DCDC_GND	DCDC_GND	DCDC ground	I

Table 56. LLWU Module Signal Descriptions

SoC Signal Name	Module Signal Name	Description	I/O
LLWU_P[15:0]	LLWU_P[15:0]	Wakeup inputs	I

8.3.4 Clock Modules

This section contains tables for Clock signal descriptions.

Table 57. Clock Module Signal Descriptions

SoC Signal Name	Module Signal Name	Description	I/O
EXTAL	EXTAL	26 MHz/32 MHz External clock/Oscillator input	I
XTAL	XTAL	26 MHz/32 MHz Oscillator input	I
XTAL_OUT	XTAL_OUT	26 MHz/32 MHz Clock output	O

Table continues on the next page...

Table 57. Clock Module Signal Descriptions (continued)

SoC Signal Name	Module Signal Name	Description	I/O
XTAL_OUT_EN	XTAL_OUT_ENABLE	26 MHz/32 MHz Clock output enable for XTAL_OUT	I
EXTAL32K	EXTAL32K	32 kHz External clock/ Oscillator input	I
XTAL32K	XTAL32K	32 kHz Oscillator input	I
CLKOUT	CLKOUT	Internal clocks monitor	O

8.3.5 Analog Modules

This section contains tables for Analog signal descriptions.

Table 58. ADC0 Signal Descriptions

SoC Signal Name	Module Signal Name	Description	I/O
ADC0_DM0	DADM0	ADC Channel 0 Differential Input Negative	I
ADC0_DP0	DADP0	ADC Channel 0 Differential Input Positive	I
ADC0_SE[5:1]	AD[5:1]	ADC Channel 0 Single-ended Input n	I
VREFH	V_{REFSH}	Voltage Reference Select High	I
VDDA	V_{DDA}	Analog Power Supply	I
VSSA	V_{SSA}	Analog Ground	I

Table 59. CMP0 Signal Descriptions

SoC Signal Name	Module Signal Name	Description	I/O
CMP0_IN[5:0]	IN[5:0]	Analog voltage inputs	I
CMP0_OUT	CMP0	Comparator output	O

Table 60. DAC0 Signal Descriptions

SoC Signal Name	Module Signal Name	Description	I/O
DAC0_OUT	V_{OUT}	DAC output	O

Table 61. VREF Signal Descriptions

SoC Signal Name	Module Signal Name	Description	I/O
VREF_OUT	VREF_OUT	Internally generated voltage reference output	O

8.3.6 Timer Modules

This section contains tables describing timer module signals.

Table 62. TPM0 Module Signal Descriptions

SoC Signal Name	Module Signal Name	Description	I/O
TPM_CLKIN[1:0]	TPM_EXTCLK	External clock	I
TPM0_CH[3:0]	TPM_CH[3:0]	TPM channel	I/O

Table 63. TPM1 Module Signal Descriptions

SoC Signal Name	Module Signal Name	Description	I/O
TPM_CLKIN[1:0]	TPM_EXTCLK	External clock	I
TPM1_CH[1:0]	TPM_CH[1:0]	TPM channel	I/O

Table 64. TPM2 Module Signal Descriptions

SoC Signal Name	Module Signal Name	Description	I/O
TPM_CLKIN[1:0]	TPM_EXTCLK	External clock	I
TPM2_CH[1:0]	TPM_CH[1:0]	TPM channel	I/O

Table 65. LPTMR0 Module Signal Descriptions

SoC Signal Name	Module Signal Name	Description	I/O
LPTMR0_ALT[2:1]	LPTMR0_ALT[2:1]	Pulse counter input pin	I

Table 66. RTC Module Signal Descriptions

SoC Signal Name	Module Signal Name	Description	I/O
RTC_CLKOUT	RTC_CLKOUT	1 Hz square-wave output	O

8.3.7 Communication Interfaces

This section contains tables for the signal descriptions for the communication modules.

Table 67. SPI0 Module Signal Descriptions

SoC Signal Name	Module Signal Name	Description	I/O
SPI0_PCS0	PCS0/SS	Chip Select/Slave Select	I/O
SPI0_PCS[2:1]	PCS[2:1]	Chip Select	O
SPI0_SCK	SCK	Serial Clock	I/O
SPI0_SIN	SIN	Data In	I
SPI0_SOUT	SOUT	Data Out	O

Table 68. SPI1 Module Signal Descriptions

SoC Signal Name	Module Signal Name	Description	I/O
SPI1_PCS0	SPI1_PCS0	Chip Select/Slave Select	I/O
SPI1_SCK	SCK	Serial Clock	I/O
SPI1_SIN	SIN	Data In	I
SPI1_SOUT	SOUT	Data Out	O

Table 69. I2C0 Module Signal Descriptions

SoC Signal Name	Module Signal Name	Description	I/O
I2C0_SCL	SCL	I2C serial clock line	I/O
I2C0_SDA	SDA	I2C serial data line	I/O

Table 70. I2C1 Module Signal Descriptions

SoC Signal Name	Module Signal Name	Description	I/O
I2C1_SCL	SCL	I2C serial clock line	I/O
I2C1_SDA	SDA	I2C serial data line	I/O

Table 71. LPUART0 Module Signal Descriptions

SoC Signal Name	Module Signal Name	Description	I/O
LPUART0_CTS_b	LPUART CTS	Clear To Send	I
LPUART0_RTS_b	LPUART RTS	Request To Send	O
LPUART0_RX	LPUART RxD	Receive Data	I
LPUART0_TX	LPUART TxD	Transmit Data[1]	I/O

1. This pin is normally an output, but is an input (tristated) in single wire mode whenever the transmitter is disabled or transmit direction is configured for receive data

8.3.8 Human-Machine Interfaces(HMI)

This section contains tables describing the HMI signals.

Table 72. GPIO Module Signal Descriptions

SoC Signal Name	Module Signal Name	Description	I/O
PTA[19:16][2:0]	PORTA19-16, 2-0	General Purpose Input/ Output	I/O
PTB[18:16][3:0]	PORTB18-16, 3-0	General Purpose Input/ Output	I/O
PTC[19:16][7:1]	PORTC19-16, 7-1	General Purpose Input/ Output	I/O

Table 73. TSI0 Module Signal Descriptions

SoC Signal Name	Module Signal Name	Description	I/O
TSI0_CH[15:0]	TSI[15:0]	Touch Sensing Input capacitive pins	I/O

9 Package Information

9.1 Obtaining package dimensions

Package dimensions are provided in package drawings.

To find a package drawing, go to **nxp.com** and perform a keyword search for the drawing's document number:

Table 74. Packaging Dimensions

If you want the drawing for this package	Then use this document number
48-pin Laminate QFN (7x7)	98ASA00694D

10 Revision History

Table 75. MWPR1x24ZVHT Revision History

Rev. No.	Date	Substantial Changes
0	04/2019	Initial Release

How to Reach Us:

Home Page:
nxp.com

Web Support:
nxp.com/support

Information in this document is provided solely to enable system and software implementers to use NXP products. There are no express or implied copyright licenses granted hereunder to design or fabricate any integrated circuits based on the information in this document. NXP reserves the right to make changes without further notice to any products herein.

NXP makes no warranty, representation, or guarantee regarding the suitability of its products for any particular purpose, nor does NXP assume any liability arising out of the application or use of any product or circuit, and specifically disclaims any and all liability, including without limitation consequential or incidental damages. “Typical” parameters that may be provided in NXP data sheets and/or specifications can and do vary in different applications, and actual performance may vary over time. All operating parameters, including “typicals,” must be validated for each customer application by customer’s technical experts. NXP does not convey any license under its patent rights nor the rights of others. NXP sells products pursuant to standard terms and conditions of sale, which can be found at the following address: nxp.com/SalesTermsandConditions.

While NXP has implemented advanced security features, all products may be subject to unidentified vulnerabilities. Customers are responsible for the design and operation of their applications and products to reduce the effect of these vulnerabilities on customer's applications and products, and NXP accepts no liability for any vulnerability that is discovered. Customers should implement appropriate design and operating safeguards to minimize the risks associated with their applications and products.

NXP, the NXP logo, NXP SECURE CONNECTIONS FOR A SMARTER WORLD, COOLFLUX, EMBRACE, GREENCHIP, HITAG, I2C BUS, ICODE, JCOP, LIFE VIBES, MIFARE, MIFARE CLASSIC, MIFARE DESFire, MIFARE PLUS, MIFARE FLEX, MANTIS, MIFARE ULTRALIGHT, MIFARE4MOBILE, MIGLO, NTAG, ROADLINK, SMARTLX, SMARTMX, STARPLUG, TOPFET, TRENCHMOS, UCODE, Freescale, the Freescale logo, AltiVec, C-5, CodeTEST, CodeWarrior, ColdFire, ColdFire+, C-Ware, the Energy Efficient Solutions logo, Kinetis, Layerscape, MagniV, mobileGT, PEG, PowerQUICC, Processor Expert, QorIQ, QorIQ Qonverge, Ready Play, SafeAssure, the SafeAssure logo, StarCore, Symphony, VortiQa, Vybrid, Airfast, BeeKit, BeeStack, CoreNet, Flexis, MXC, Platform in a Package, QUICC Engine, SMARTMOS, Tower, TurboLink, and UMEMS are trademarks of NXP B.V. All other product or service names are the property of their respective owners. AMBA, Arm, Arm7, Arm7TDMI, Arm9, Arm11, Artisan, big.LITTLE, Cordio, CoreLink, CoreSight, Cortex, DesignStart, DynamIQ, Jazelle, Keil, Mali, Mbed, Mbed Enabled, NEON, POP, RealView, SecurCore, Socrates, Thumb, TrustZone, ULINK, ULINK2, ULINK-ME, ULINK-PLUS, ULINKpro, µVision, Versatile are trademarks or registered trademarks of Arm Limited (or its subsidiaries) in the US and/or elsewhere. The related technology may be protected by any or all of patents, copyrights, designs and trade secrets. All rights reserved. Oracle and Java are registered trademarks of Oracle and/or its affiliates. The Power Architecture and Power.org word marks and the Power and Power.org logos and related marks are trademarks and service marks licensed by Power.org.

© 2019 NXP B.V.

Document Number MWPR1124ZVHT
Revision 0, 04/2018