Single-Ended Cordsets

BCC M425-0000-1A-040-PX0534-100
Order Code: BCC08HT

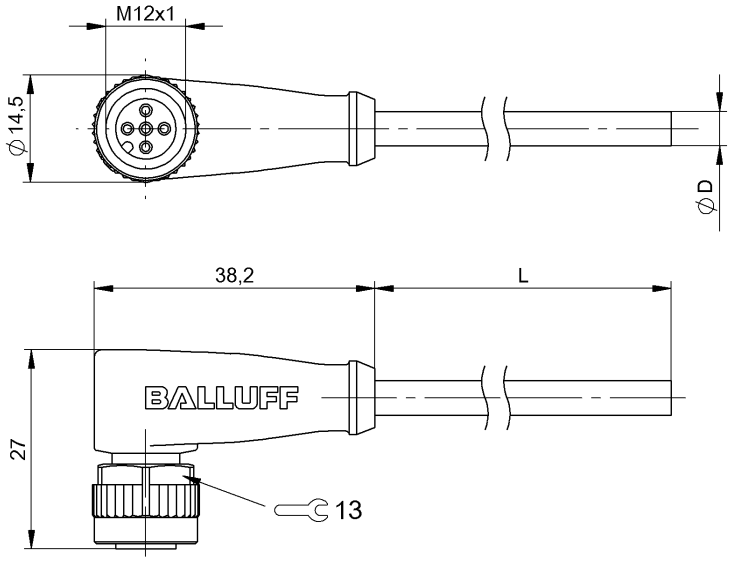

Basic features

Approval/Conformity	CE cULus EAC WEEE

Display/Operation

Function indicator (Pin 2)	LED white
Function indicator (Pin 4)	LED yellow
Power indicator	Green LED

Electrical connection

Bending radius min., fixed cable	5 x D
Bending radius min., flexible cable	10 x D
Cable	PUR black, 10 m, drag chain compatible
Cable diameter D	5.00 mm ±0.20 mm
Cable, bending cycles min.	2 mil.
Conductor cross-section	0.34 mm²
Connection	M12x1-Female, angled, 5-pin, A-coded
Connector configuration	right-angle
Number of conductors	5
Number of pins	5
System	Molded

Electrical data

Operating voltage Ub	30 VDC
Rated current (40 °C)	4.0 A

Environmental conditions

Cable temperature UL max., fixed routing	80 °C
Cable temperature UL max., flexible routing	80 °C
Cable temperature, drag chain	-25...60 °C
Cable temperature, fixed routing	-50...90 °C
Cable temperature, flexible routing	-25...90 °C
IP rating	IP67, IP68, IP69K

Interface

Switching output	PNP NO/NC antivalent

Material

Cable jacket, material	PUR
Material contact carrier	PUR
Material contacts	Bronze
Material cover nut	Die-cast zinc
Material grip	PUR

Mechanical data

Acceleration max., drag chain	5 m/s²
Cable jacket, color	black
Cable length L	10.00 m
Cable properties	drag chain compatible
Horizontal travel permitted, drag chain	5 m
Tightening torque pigtail	0.6 Nm
Traverse speed max., drag chain	200 m/min
Vertical travel permitted, drag chain	5 m

BCC M425-0000-1A-040-PX0534-100
Order Code: BCC08HT

Remarks

Cable construction acc. to UL-AWM Style 20549
Halogen-free per DIN VDE 0472 Part 815
Silicone-free
Flame-retarding acc. to IEC 60332-2
Enclosure rating per IEC 60529 or 20653, only in screwed state with the associated mating piece.

Connector Drawings

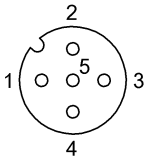

PIN 1: brown
PIN 2: white
PIN 3: blue
PIN 4: black
PIN 5: green/yellow

Wiring Diagrams

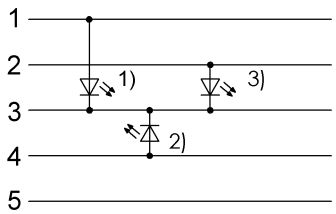

1) Green LED = Power
2) Yellow LED = Function
3) LED white = Function