FAIRCHILD SEMICONDUCTOR®

KSD1020

Audio Frequency Amplifier

- Complement to KSB810

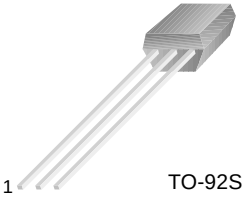

TO-92S

1.Emitter 2. Collector 3. Base

NPN Epitaxial Silicon Transistor

Absolute Maximum Ratings T_a=25°C unless otherwise noted

Symbol	Parameter	Ratings	Units
V_{CBO}	Collector-Base Voltage	30	V
V_{CEO}	Collector-Emitter Voltage	25	V
V_{EBO}	Emitter-Base Voltage	5.0	V
I_C	Collector Current (DC)	700	mA
I_{CP}	* Collector Current (Pulse)	1.0	A
P_C	Collector Power Dissipation	350	mW
T_J	Junction Temperature	150	°C
T_{STG}	Storage Temperature	-55 ~ 150	°C

* PW≤10ms, Duty Cycle≤50%

Electrical Characteristics T_a=25°C unless otherwise noted

Symbol	Parameter	Test Condition	Min.	Typ.	Max.	Units
I_{CBO}	Collector Cut-off Current	V_{CB}=30V, I_E=0			100	nA
I_{EBO}	Emitter Cut-off Current	V_{EB}=5V, I_C=0			100	nA
h_{FE1} h_{FE2}	* DC Current Gain	V_{CE}=1V, I_C=100mA V_{CE}=1V, I_C=700mA	120 35	200 140	400	
V_{BE} (on)	Base-Emitter On Voltage	V_{CE}=6V, I_C=10mA	600	640	700	mV
V_{CE}(sat)	Collector-Emitter Saturation Voltage	I_C=700mA, I_B=70mA		0.2	0.4	V
V_{BE}(sat)	Base-Emitter Saturation Voltage	I_C=700mA, I_B=70mA		0.95	1.2	V
C_{ob}	Output Capacitance	V_{CB}=6V, I_E=0, f=1MHz		13	25	pF
f_T	Current Gain Bandwidth Product	V_{CE}=6V, I_C=10mA	50	170		MHz

* Pulse Test: PW≤350µs, Duty Cycle≤ 2%

h_{FE1} Classification

Classification	Y	G
h_{FE1}	120 ~ 240	200 ~ 400

©2004 Fairchild Semiconductor Corporation

Typical Characteristics

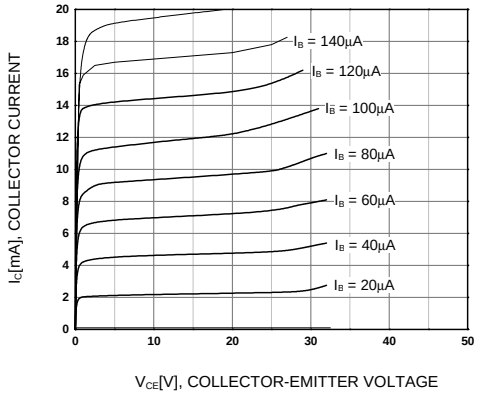

Figure 1. Static Characteristic

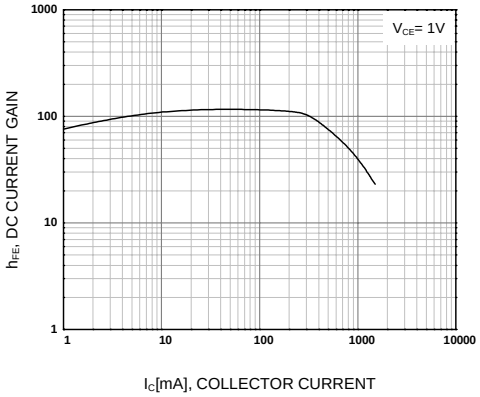

Figure 2. DC current Gain

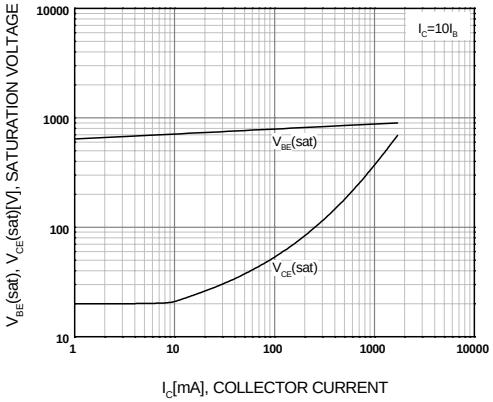

Figure 3. Base-Emitter Saturation Voltage Collector-Emitter Saturation Voltage

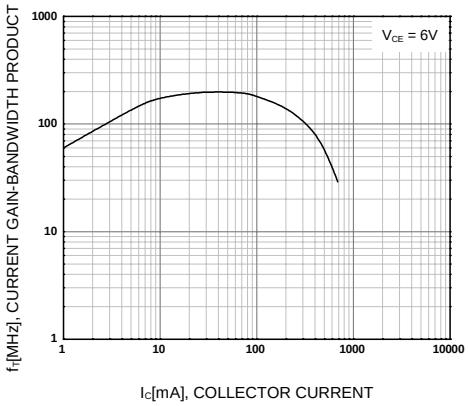

Figure 4. Current Gain-Bandwidth Product

©2004 Fairchild Semiconductor Corporation

Package Dimensions

TO-92S

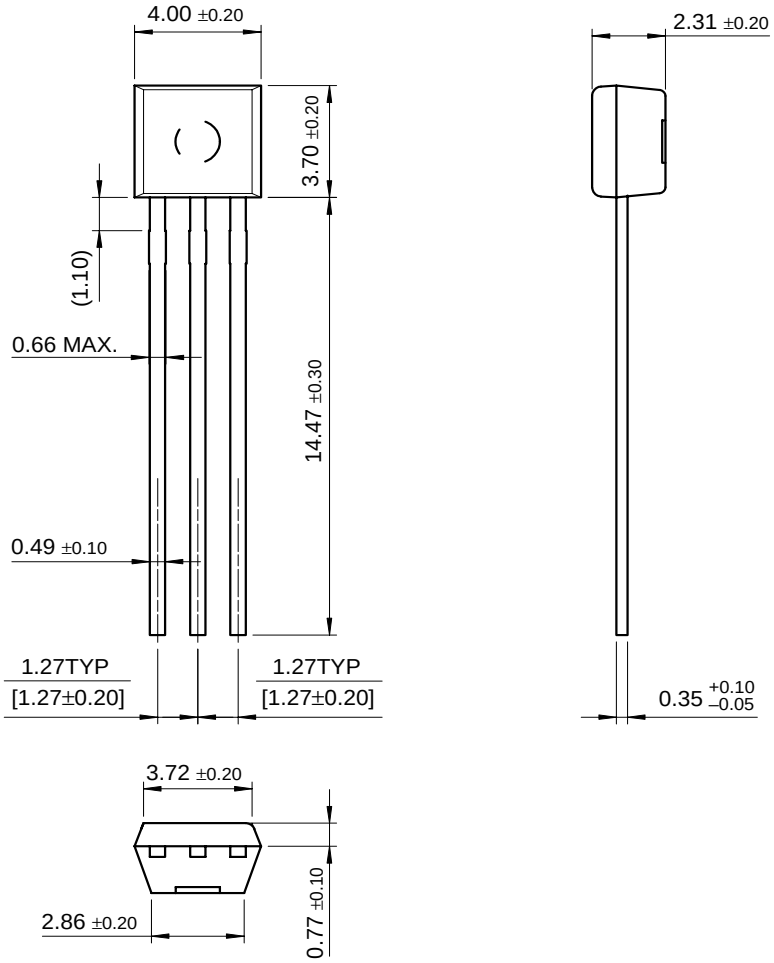

Dimensions in Millimeters

©2004 Fairchild Semiconductor Corporation

TRADEMARKS

The following are registered and unregistered trademarks Fairchild Semiconductor owns or is authorized to use and is not intended to be an exhaustive list of all such trademarks.

ACEx™	FACT Quiet Series™	ImpliedDisconnect™	PACMAN™	SPM™
ActiveArray™	FAST®	ISOPLANAR™	POP™	Stealth™
Bottomless™	FASTr™	LittleFET™	Power247™	SuperFET™
CoolFET™	FPS™	MICROCOUPLER™	PowerSaver™	SuperSOT™-3
CROSSVOLT™	FRFET™	MicroFET™	PowerTrench®	SuperSOT™-6
DOME™	GlobalOptoisolator™	MicroPak™	QFET®	SuperSOT™-8
EcoSPARK™	GTO™	MICROWIRE™	QS™	SyncFET™
E^2CMOS™	HiSeC™	MSX™	QT Optoelectronics™	TinyLogic®
EnSigna™	I^2C™	MSXPro™	Quiet Series™	TINYOPTO™
FACT™	*i-Lo*™	OCX™	RapidConfigure™	TruTranslation™
Across the board. Around the world.™		OCXPro™	RapidConnect™	UHC™
The Power Franchise®		OPTOLOGIC®	SILENT SWITCHER®	UltraFET®
Programmable Active Droop™		OPTOPLANAR™	SMART START™	VCX™

DISCLAIMER

FAIRCHILD SEMICONDUCTOR RESERVES THE RIGHT TO MAKE CHANGES WITHOUT FURTHER NOTICE TO ANY PRODUCTS HEREIN TO IMPROVE RELIABILITY, FUNCTION OR DESIGN. FAIRCHILD DOES NOT ASSUME ANY LIABILITY ARISING OUT OF THE APPLICATION OR USE OF ANY PRODUCT OR CIRCUIT DESCRIBED HEREIN; NEITHER DOES IT CONVEY ANY LICENSE UNDER ITS PATENT RIGHTS, NOR THE RIGHTS OF OTHERS.

LIFE SUPPORT POLICY

FAIRCHILD'S PRODUCTS ARE NOT AUTHORIZED FOR USE AS CRITICAL COMPONENTS IN LIFE SUPPORT DEVICES OR SYSTEMS WITHOUT THE EXPRESS WRITTEN APPROVAL OF FAIRCHILD SEMICONDUCTOR CORPORATION.

As used herein:

1. Life support devices or systems are devices or systems which, (a) are intended for surgical implant into the body, or (b) support or sustain life, or (c) whose failure to perform when properly used in accordance with instructions for use provided in the labeling, can be reasonably expected to result in significant injury to the user.

2. A critical component is any component of a life support device or system whose failure to perform can be reasonably expected to cause the failure of the life support device or system, or to affect its safety or effectiveness.

PRODUCT STATUS DEFINITIONS

Definition of Terms

Datasheet Identification	Product Status	Definition
Advance Information	Formative or In Design	This datasheet contains the design specifications for product development. Specifications may change in any manner without notice.
Preliminary	First Production	This datasheet contains preliminary data, and supplementary data will be published at a later date. Fairchild Semiconductor reserves the right to make changes at any time without notice in order to improve design.
No Identification Needed	Full Production	This datasheet contains final specifications. Fairchild Semiconductor reserves the right to make changes at any time without notice in order to improve design.
Obsolete	Not In Production	This datasheet contains specifications on a product that has been discontinued by Fairchild semiconductor. The datasheet is printed for reference information only.

©2004 Fairchild Semiconductor Corporation