Model WS17KT
with analog or SSI output

Compact sensor for medium ranges

- **Protection class IP64**
- **Measurement ranges:**
  0 ... 1500 mm to 0 ... 15000 mm
- **Analog output 0 … 10 V, 4 … 20 mA, potentiometer or A/D converted synchronous serial output (SSI)**

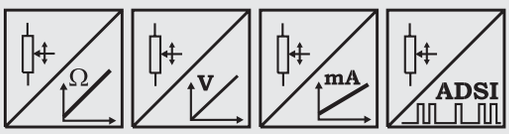

Specifications	Outputs	Potentiometer: 1 kΩ
		Voltage: 0...10 V
		Current: 4...20 mA, 2 or 3 wire
		Voltage and current output, adjustable
		A/D converted synchronous serial max. 16 bit (SSI)
	Resolution	Essentially inifinite / ADSI16: max. 16 bit full scale
	Material	Aluminium and stainless steel Cable: stainless steel
	Sensing Device	Precision potentiometer
	Connector	Male socket 8 pin (M12 or DIN 45326)
	Linearity	Up to ±0.05 % full scale
	Protection class	IP64
	Weight	See table next page
	Environmental	
	EMC	Refer to output specification
	Temperature	Refer to output specification

Order Code WS17KT Analog or SSI

WS17KT – ☐ – ☐ – ☐ – ☐ – ☐

Model Name

Measurement Range (in mm)
1500 / 2000 / 2500 / 3000 / 4000 / 5000 / 6250 / 10000 / 12500 / 15000

Outputs (see pages 57 ff.)
R1K = Potentiometer 1 kΩ (other values on request)
10V = with 0 ... 10 V signal conditioner
420A = with 4 ... 20 mA signal conditioner (2 wire)
420T = with 4 ... 20 mA signal conditioner (3 wire)
PMU = with 0...10 V/4 … 20 mA signal conditioner, adjustable
ADSI = with A/D converted synchronous serial output 16 bit (option: 12, 14 bit)

Linearity
L10 = ±0.10 % option: L05 = ±0,05 % L25 = ±0.25 %

Cable fixing
M4 = M4 cable fixing
SB0 = Cable clip

Connection
M12 = 8 pin socket M12
D8 = 8 pin socket DIN 45326

Order Code Mating Connector (see accessories p. 82) **D8:** **CONN-DIN-8F-W** **M12:** **CONN-M12-8F-G**

Order Example: WS17KT - 2500 - 10V - L10 - M4 - M12

Model WS17KT
with analog or SSI output

Cable Forces and Weights typical at 20 °C	**Range** [mm]	**Weight** (approx.) [kg]	**Maximum pull-out force** [N]	**Minimum pull-in force** [N]
	1500	1.4	11.0	6.2
	2000	1.4	8.5	4.8
	2500	1.5	5.5	3.5
	3000	2.9	14.5	10.3
	4000	2.9	12.7	9.1
	5000	5.3	13.0	9.3
	6250	5.5	10.2	7.3
	10000	6.0	16.5	9.1
	12500	6.0	16.5	9.1
	15000	6.0	16.5	9.1

Outline drawing
WS17KT-1500 / 2000 / 2500

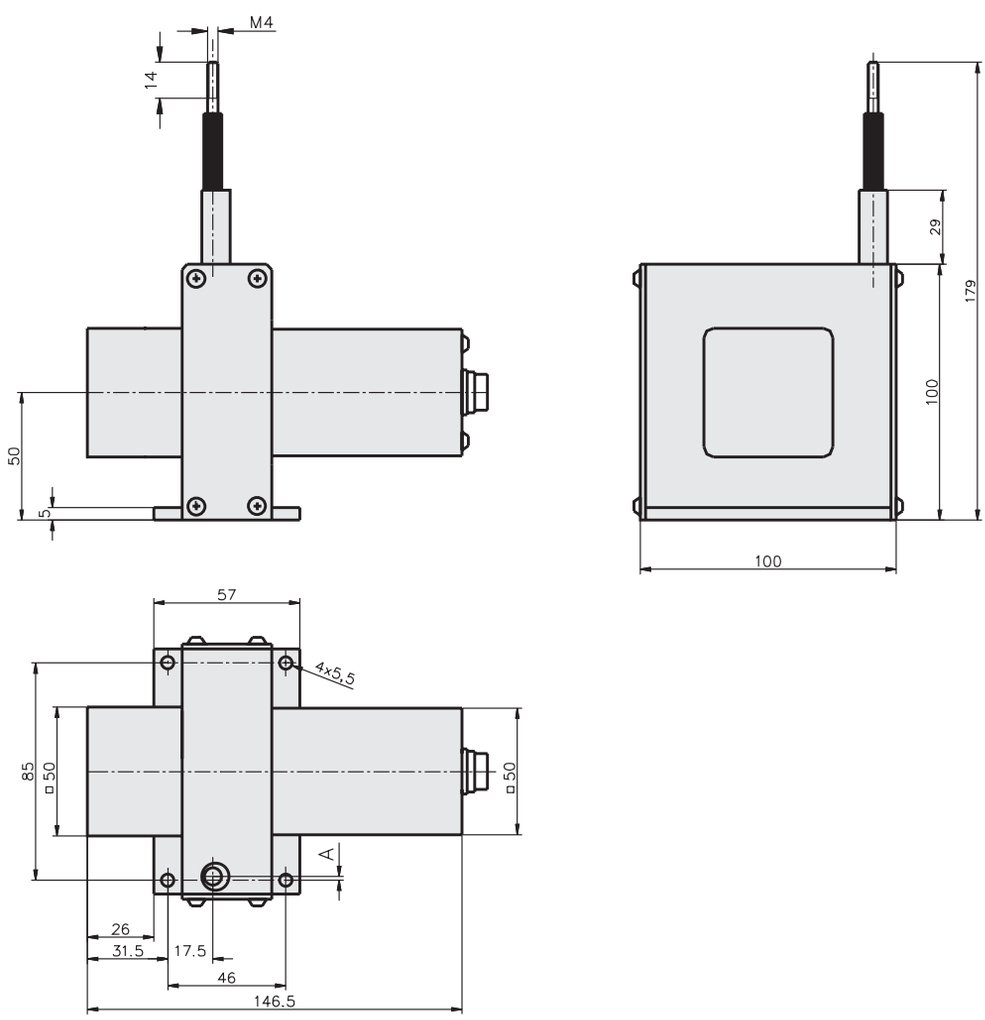

Dimensions informative only.
For guaranteed dimensions consult factory

Dimensions (mm)	**Range**	**A**
	1500	17.5
	2000	9.5
	2500	2.5

Model WS17KT
with analog or SSI output

Outline drawing
WS17KT-3000 / 4000

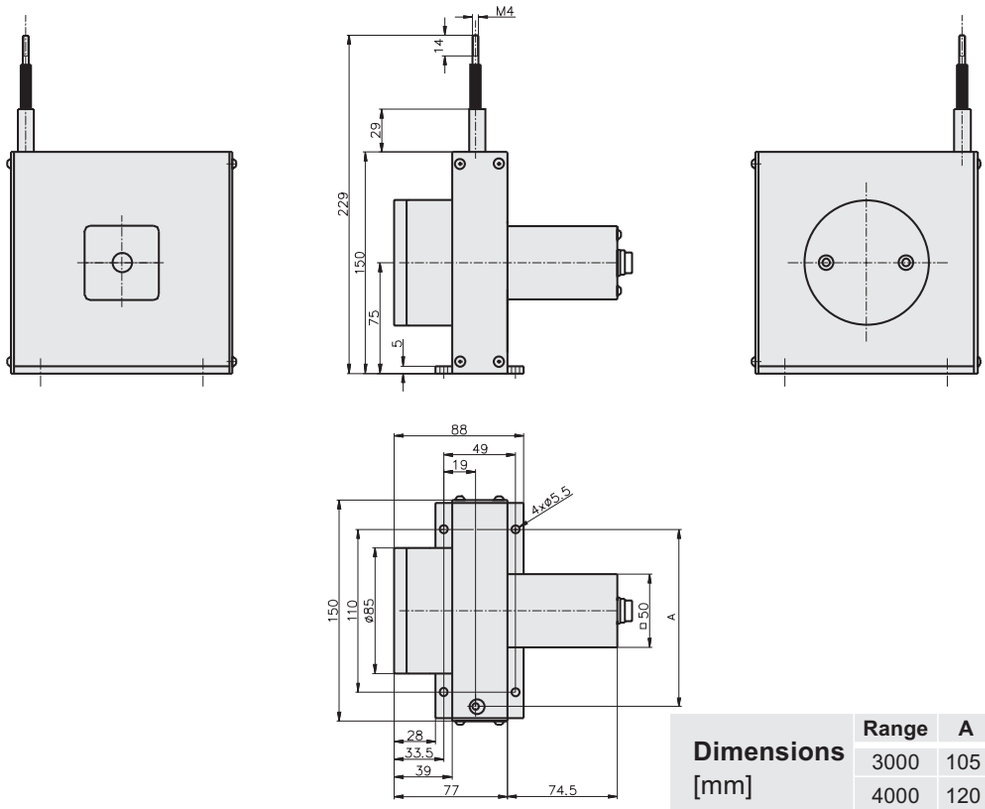

Dimensions [mm]	Range	A
	3000	105
	4000	120

Dimensions informative only.
For guaranteed dimensions consult factory

Outline drawing
WS17KT-5000 / 6250

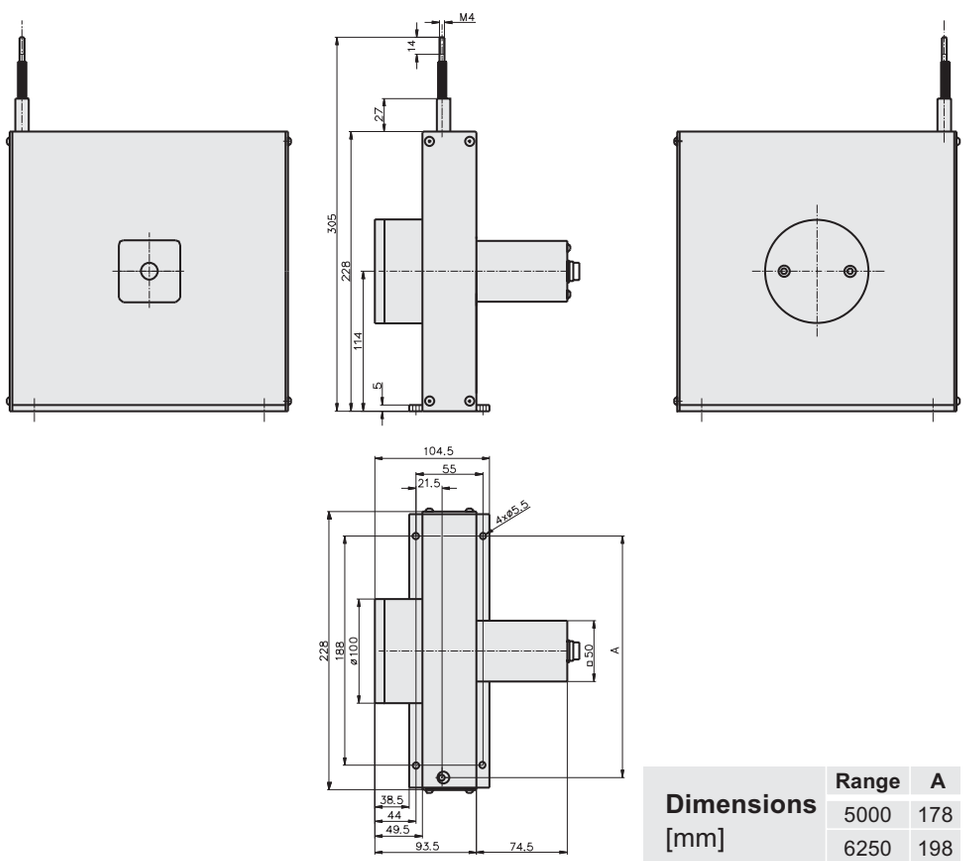

Dimensions [mm]	Range	A
	5000	178
	6250	198

Model WS17KT
with analog or SSI output

Outline drawing
WS17KT-10000 /
12500 / 15000

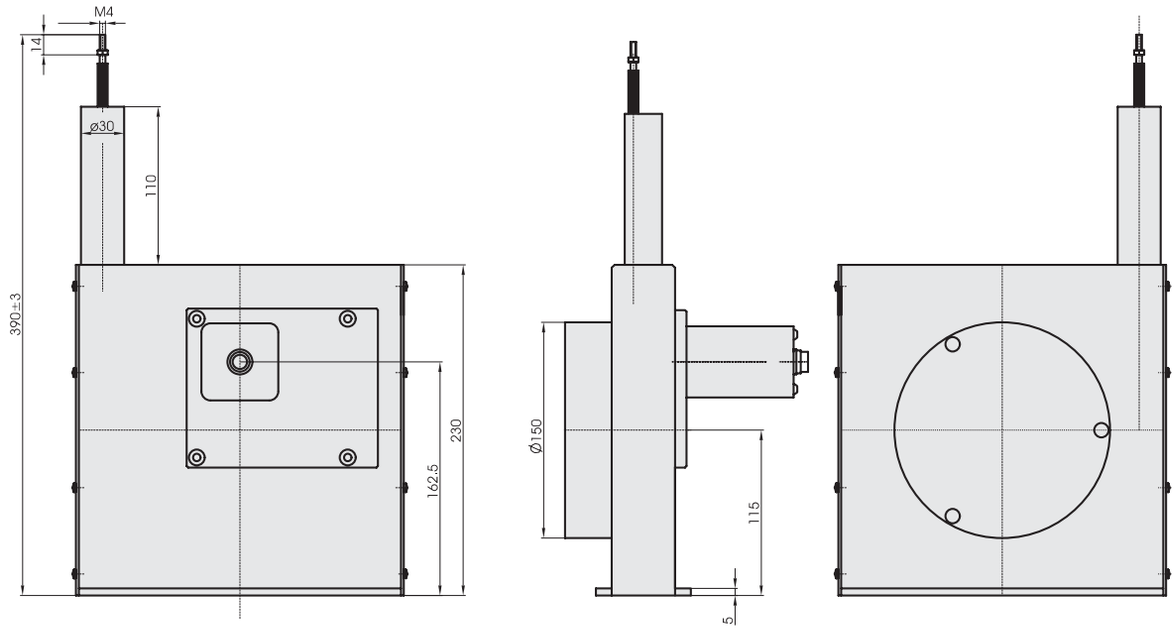

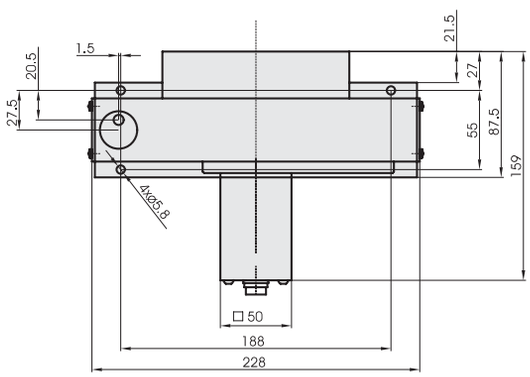

Dimensions informative only.
For guaranteed dimensions consult factory

Output Specifications
R1K and 10V for WS position sensors

Voltage divider R1K Potentiometer	Excitation Voltage	32 VDC max. at 1 kΩ (input power 1 W max.)
	Potentiometer Impedance	1 kΩ ±10%
	Thermal coefficient	±25 x 10^{-6}/ °C full scale
	Sensitivity	Depends on measurement range, individual sensitivity of sensor specified on label
	Voltage Divider Utilization Range	Approx. 3% ... 97% of full range
	Operating Temperature	-20 ... +85 °C

Signal diagram

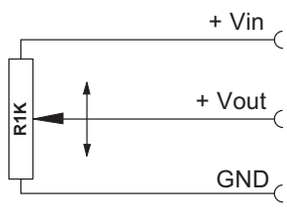

Note: The potentiometer must be connected as a voltage divider. The input impedance of the following processing circuit should be 10 MΩ min.

Signal conditioner 10V Voltage output	Excitation Voltage	+18 ... +27 V DC non stabilized
	Excitation Current	20 mA max.
	Output Voltage	0 ... +10 V DC
	Output Current	2 mA max.
	Output Load	> 5 kΩ
	Stability (Temperature)	±50 x 10^{-6} / °C full scale
	Protection	Reverse polarity, short circuit
	Output Noise	0,5 mV_{RMS}
	Operating Temperature	-20 ... +85 °C
	EMC	According to EN 61326:2004

Signal diagram

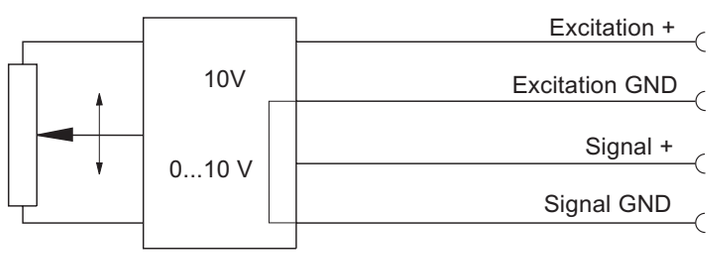

Signal Wiring	**Output signals R1K**	**10V**	**Cable color**	**Connector pin no.**
	+ Vin	Excitation +	White	1
	GND	Excitation GND	Brown	2
	+ Vout	Signal +	Green	3
		Signal GND	Yellow	4

Connection
Mating Connector

View to solder terminals

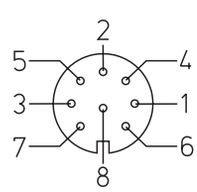

CONN-DIN-8F-W

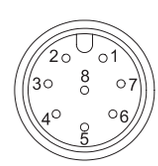

CONN-M12-8F-G

Output Specifications
420A and 420T for WS position sensors

Signal conditioner 420A Current output (2 wire) 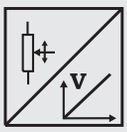	Excitation Voltage	+12 ... 27 VDC non stabilized, measured at the sensor terminals
	Excitation Current	35 mA max.
	Output Current	4 ... 20 mA equivalent to 0 ... 100% range
	Stability (Temperature)	±100 x 10^{-6} / °C full scale
	Protection	Reverse polarity, short circuit
	Output Noise	0.5 mV_{RMS}
	Operating Temperature	-20 ... +85 °C
	EMC	According to EN 61326:2004

Signal Diagram

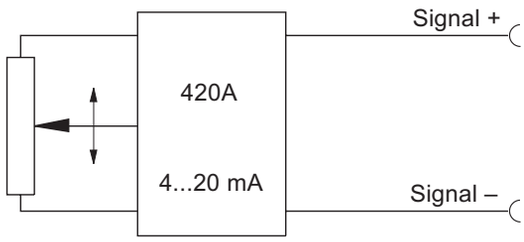

Signal Conditioner 420T Current output (3 wire) 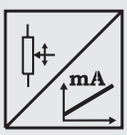	Excitation Voltage	+18...+27 V DC non stabilized
	Excitation Current	40 mA max.
	Load Resistor	350 Ω max.
	Output Current	4 ... 20 mA equivalent to 0 ... 100% range
	Stability (Temperature)	±50 x 10^{-6} / °C full scale
	Protection	Reverse polarity, short circuit
	Output Noise	0.5 mV_{RMS}
	Operating Temperature	-20 ... +85 °C
	EMC	According to EN 61326:2004

Signal diagram

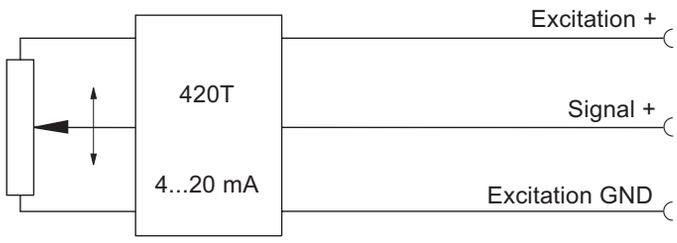

Signal Wiring

Output signals 420A	420T	Cable color	Connector pin no.
Signal +	Excitation +	White	1
Signal –	Excitation GND	Brown	2
	Signal +	Green	3

Connection
Mating Connector

View to solder terminals

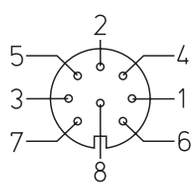

CONN-DIN-8F-W

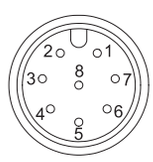

CONN-M12-8F-G

Output Specification
PMU for WS position sensors

Signal Conditioner PMU, adjustable Voltage output and current output (3 wire) 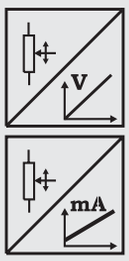	Excitation voltage	+18 ... 27 V DC
	Excitation current	50 mA max.
	Voltage output Output current Output load	0 ... 10 V 10 mA max. 1 kΩ min.
	Current output Load resistor	4 ... 20 mA (3 wire) 500 Ω max.
	Adjustment Activation of offset and gain adjust Scalable range	 Connect with excitation GND (0 V) 90 % max. full scale
	Stability (Temperature)	±50 x 10^{-6} / °C full scale
	Protection	Reverse polarity, short circuit
	Output noise	1 mV_{eff}
	Operating temperature	-20 ... +85 °C
	EMC	According to EN 61326:2004

Signal diagram

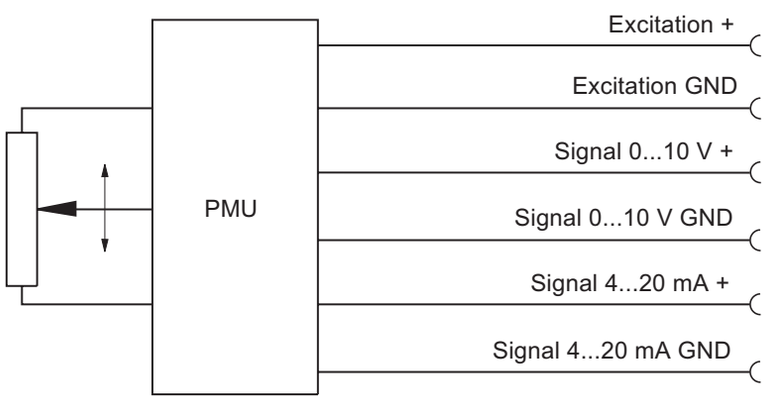

Signal wiring

Output signals	Connector pin no.
Excitation +	1
Excitation GND	2
Signal 0...10 V +	3
Signal 0...10 V GND	4
Signal 4...20 mA +	5
Signal 4...20 mA GND	6
Offset	7
Gain	8

Connection
Mating Connector

View to solder terminals

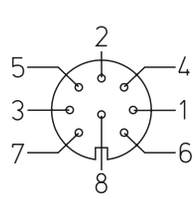

CONN-DIN-8F-W

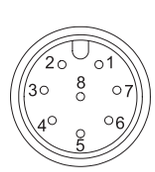

CONN-M12-8F-G

Output Specification
ADSI16 for WS position sensors

- **Resolution 16 bit, data transmission synchronous serial/SSI**
- **Optional available with 12 bit (ADSI) or 14 bit (ADSI14) resolution**
- **No loss of data at power-down**
- **Easy to connect to PLC's with SSI input circuit**

Description

The sensing device of the ADSI is a precision potentiometer. The position information is given by an analog/digital converter output serialized as a data word. Data transmission takes place by means of the signals CLOCK and DATA. The processing unit (PLC, Micro-computer) sends pulse sequences which clock the data transmission with the required transfer rate. With the first falling edge of a pulse sequence the position of the sensor is recorded and stored. The following rising edges control the bit-by-bit A/D conversion, encoding and output of the data word. After a delay time the next new position information will be transmitted.

Data Format
(Train of 26 Pulses)

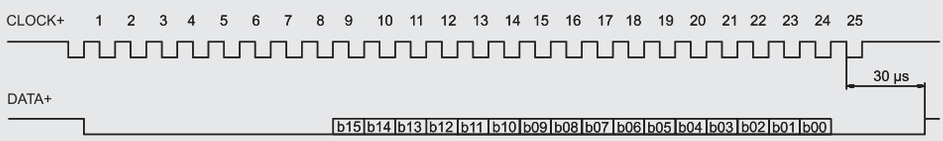

Signal Conditioner ADSI
A/D converted synchronous serial

Output	EIA RS-422, RS-485, short-circuit proof
Excitation voltage	11 ... 27 VDC
Excitation current	200 mA max.
Clock frequency	70 ... 500 kHz
Code	Gray code, continuous progression
Delay between pulse trains	T=30 µs min.
Resolution	16 bit (65536 counts) full scale; optional 12 bit or 14 bit
Stability (temperature)	±50 x 10^{-6} / °C full scale
Operation temperature	-20 ... +85 °C
EMC	According to EN 61326:2004

Recommended Processing Input Circuit

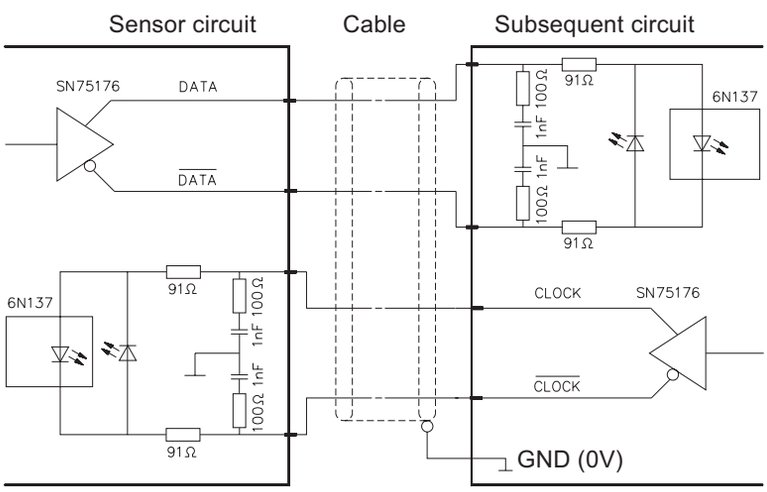

Transmission rate

Cable length	Baud rate
< 50 m	< 300 kHz
< 100 m	< 100 kHz

Note:
Extension of the cable length will reduce the maximum transmission rate. The signals CLOCK/CLOCK and DATA/DATA must be connected in a twisted pair cable, shielded per pair and common.

Signal Wiring

Signal names	Connector pin no.
Excitation +	1
Excitation GND (0V)	2
CLOCK	3
CLOCK	4
DATA	5
DATA	6
Screen	not connected

Mating connector: view to solder terminals

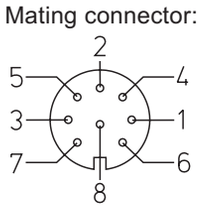

CONN-DIN-8F-W

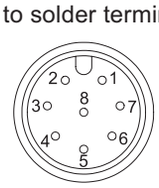

CONN-M12-8F-G