THIS DRAWING IS UNPUBLISHED. RELEASED FOR PUBLICATION DEC ,2005.
© COPYRIGHT 2005 By – ALL RIGHTS RESERVED.

LOC	DIST
E	B

REVISIONS

P	LTR	DESCRIPTION	DATE	DWN	APVD
	C1	ECR–12–005726	27MAR12	RK	MY

NOTES:

1. PACK IN ACCORDANCE WITH TE SPEC 107–3275
2. 100 TRAY PACK IN ACCORDANCE WITH TE SPEC 107–3275
3. Ag PLATING

4 ELECTRICAL CHARACTERISTICS

FREQUENCY RANGE:	DC – 11 GHz
NOMINAL IMPEDANCE:	50 Ohm
INSULATION RESISTANCE:	5000 MOhm
WORKING VOLTAGE:	500 Volts RMS at Sea Level
DIELECTRIC WITHSTAND VOLTAGE:	1500 Volts RMS Max
CONTACT RESISTANCE:	
CENTRE CONTACT:	1.50 mOhm Max
OUTER CONTACT:	1.00 mOhm Max
INSERTION LOSS db:	0.20 Max

5 MECHANICAL CHARATERISTICS

MOUNT NUT RECOMMENDED TORQUE:	2.5N
DURABILITY:	500 Cycles Min

6 ENVIRONMENTAL CHARACTERISTICS

OPERATING TEMPERATURE:	–65 to +165 DegC

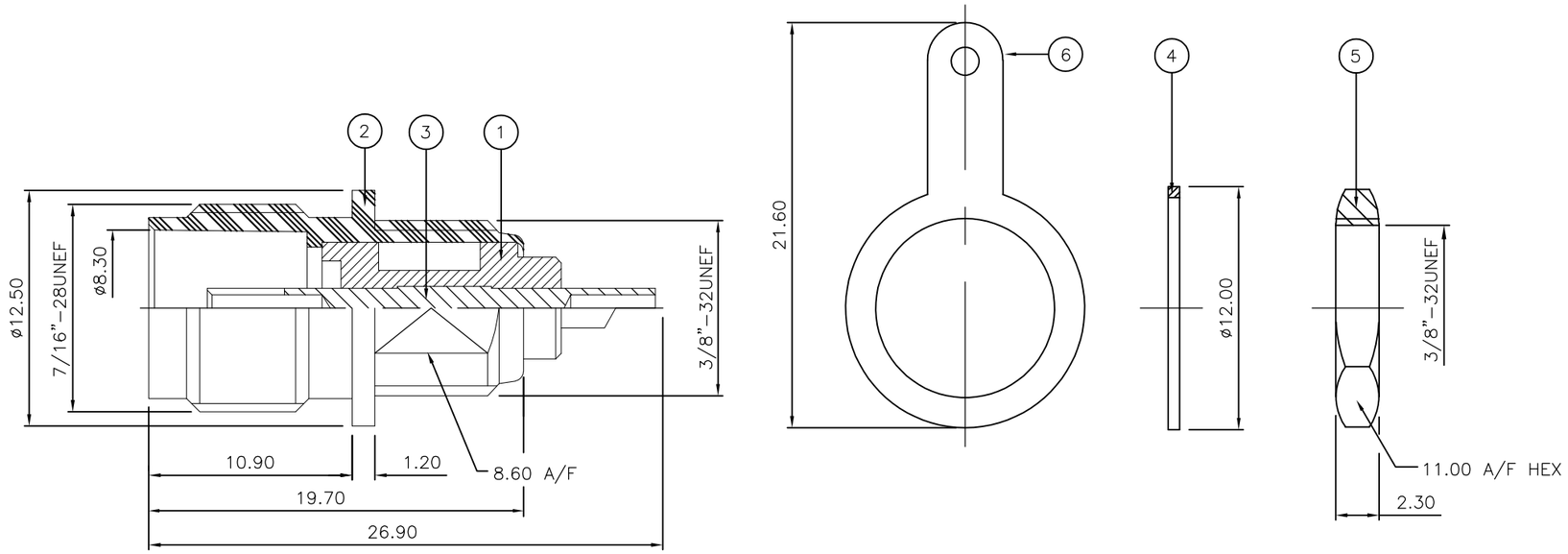

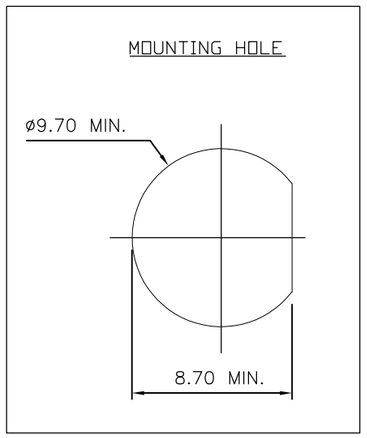

QUANTITY PER ASSY				PARTS LIST		
		1	1	BRASS (3)	SOLDER TAG	6
		1	1	BRASS (3)	HEX NUT	5
		1	1	BRASS (3)	WASHER	4
		1	1	BRASS (3)	CONTACT	3
		1	1	BRASS (3)	BODY	2
		1	1	PTFE	INSULATION	1
		6--0	1--0	MATERIAL	DESCRIPTION	ITEM
		(2)	(1)			

THIS DRAWING IS A CONTROLLED DOCUMENT.

DIMENSIONS: mm

TOLERANCES UNLESS OTHERWISE SPECIFIED:

0 PLC	± –
1 PLC	± –
2 PLC	± –
3 PLC	± –
4 PLC	± –
ANGLES	± –

MATERIAL: SEE TABLE

FINISH: –

DWN	J.SANDWELL	15DEC05
CHK	S.PARLOW	15DEC05
APVD	F.WHEELER–KING	15DEC05
PRODUCT SPEC	–	
APPLICATION SPEC	–	
WEIGHT	–	

CUSTOMER DRAWING

TE Connectivity

NAME: TNC BULKHEAD SOCKET FRONT MOUNT 50 & 75 OHM + TAG –

SIZE	CAGE CODE	DRAWING NO	RESTRICTED TO
A3	00779	C–1337469	–

SCALE	SHEET	REV
NTS	1 OF 1	C1