ST631K

LOW VOLTAGE PNP POWER TRANSISTOR

PRELIMINARY DATA

Features

- LOW SATURATION VOLTAGE

Applications

- SCANNING VELOCITY MODULATION IN CRT DISPLAYS
- MEDIUM POWER LINEAR AND SWITCHING APPLICATIONS

Description

The ST631K is manufactured by low voltage Epitaxial Base technology and it is housed in SOT-32 plastic package. The complementary PNP type is ST600K.

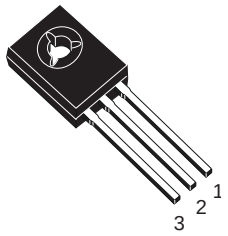

SOT-32
(TO-216)

Internal Schematic Diagram

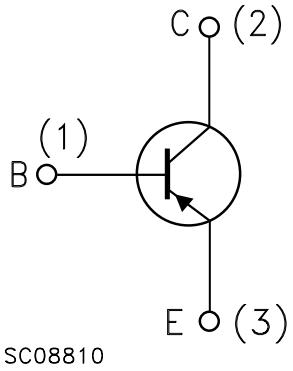

Order Codes

Part Number	Marking	Package	Packing
ST600K	631K	SOT-32	TUBE

This is preliminary information on a new product now in development or undergoing evaluation. Details are subject to change without notice.

www.st.com

1 Absolute Maximum Ratings

Table 1. Absolute Maximum Rating

Symbol	Parameter	Value	Unit
V_{CBO}	Collector-Base Voltage (I_E = 0)	-120	V
V_{CEO}	Collector-Emitter Voltage (I_B = 0)	-120	V
V_{EBO}	Collector-Base Voltage (I_C = 0)	-5	V
I_C	Collector Current	-1	A
I_{CM}	Collector Peak Current (t_P < 5ms)	-2	A
I_B	Base Current	-0.5	A
I_{BM}	Base Peak Current (t_P < 5ms)	-1	A
P_{TOT}	Total dissipation at T_c = 25°C	12.5	W
T_{STG}	Storage Temperature	-65 to 150	°C
T_J	Max. Operating Junction Temperature	150	°C

Table 2. Thermal Data

Symbol	Parameter		Value	Unit
$R_{thJ\text{-}case}$	Thermal Resistance Junction-Case	Max	10	°C/W
$R_{thJ\text{-}amb}$	Thermal Resistance Junction-Case	Max	100	°C/W

2 Electrical Characteristics

Table 3. Electrical Characteristics (T_{CASE} = 25°C; unless otherwise specified)

Symbol	Parameter	Test Conditions	Min.	Typ.	Max.	Unit
I_{CBO}	Collector Cut-off Current (I_E = 0)	V_{CB} = -50V			-1	µA
I_{EBO}	Emitter Cut-off Current (I_C = 0)	V_{EB} =- 4V			-1	µA
$V_{(BR)CBO}$ *Note: 1*	Collector-Base Breakdown Voltage (I_E = 0)	I_C = -10µA	-120			V
$V_{(BR)CEO}$ *Note: 1*	Collector-Emitter Breakdown Voltage (I_C = 0)	I_E = -1 mA	-120		1	V
$V_{(BR)EBO}$ *Note: 1*	Collector-Emitter Breakdown Voltage (I_B = 0)	I_C = -10 mA	-120		1	V
$V_{CE(sat)}$ *Note: 1*	Collector-Emitter Saturation Voltage	I_C = -500 mA I_B = -50 mA			-0.5	V
$V_{BE(sat)}$ *Note: 1*	Base-Emitter Saturation Voltage	I_C = -500 mA I_B = -50 mA			-1.2	V
h_{FE} *Note: 1*	DC Current Gain	I_C = -100 mA V_{CE} = -5 V I_C = -500 mA V_{CE} = -5 V	120 50		280	
C_{CBO}	Collector-Base Capacitance (I_B = 0)	V_{CB} = -10 V f=1MHz		40		pF
 t_{on} t_{off} t_s	INDUCTIVE LOAD Turn-On Time Turn-Off Time Storage Time	I_C = -500 mA V_{CC} = -12V I_{B1} = - I_{B2} = -50 mA t_p = 20µs		 100 500 800		 ns ns ns

Note: 1 Pulsed duration = 300 µs, duty cycle ≤1.5%.

3 Package Mechanical Data

In order to meet environmental requirements, ST offers these devices in ECOPACK® packages. These packages have a Lead-free second level interconnect . The category of second level interconnect is marked on the package and on the inner box label, in compliance with JEDEC Standard JESD97. The maximum ratings related to soldering conditions are also marked on the inner box label. ECOPACK is an ST trademark. ECOPACK specifications are available at: www.st.com

SOT-32 (TO-126) MECHANICAL DATA

DIM.	mm			inch		
	MIN.	TYP.	MAX.	MIN.	TYP.	MAX.
A	7.4		7.8	0.291		0.307
B	10.5		10.8	0.413		0.445
b	0.7		0.9	0.028		0.035
b1	0.49		0.75	0.019		0.030
C	2.4		2.7	0.040		0.106
c1	1.0		1.3	0.039		0.050
D	15.4		16.0	0.606		0.629
e		2.2			0.087	
e3	4.15		4.65	0.163		0.183
F		3.8			0.150	
G	3		3.2	0.118		0.126
H			2.54			0.100
H2		2.15			0.084	

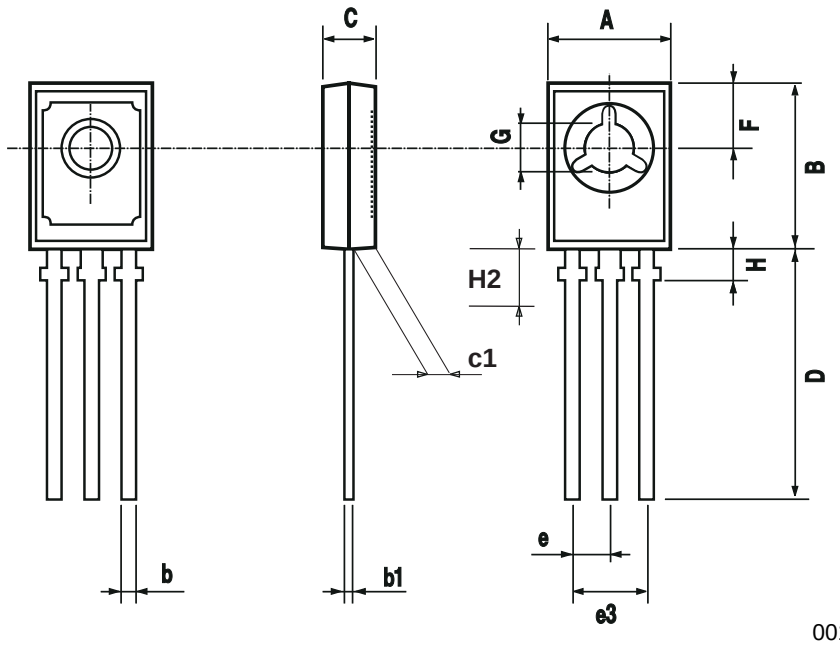

4 Revision History

Date	Revision	Changes
26-Jul-2005	1	Initial release.

Information furnished is believed to be accurate and reliable. However, STMicroelectronics assumes no responsibility for the consequences of use of such information nor for any infringement of patents or other rights of third parties which may result from its use. No license is granted by implication or otherwise under any patent or patent rights of STMicroelectronics. Specifications mentioned in this publication are subject to change without notice. This publication supersedes and replaces all information previously supplied. STMicroelectronics products are not authorized for use as critical components in life support devices or systems without express written approval of STMicroelectronics.

The ST logo is a registered trademark of STMicroelectronics.
All other names are the property of their respective owners

© 2005 STMicroelectronics - All rights reserved

STMicroelectronics group of companies

Australia - Belgium - Brazil - Canada - China - Czech Republic - Finland - France - Germany - Hong Kong - India - Israel - Italy - Japan - Malaysia - Malta - Morocco - Singapore - Spain - Sweden - Switzerland - United Kingdom - United States of America

www.st.com