HF42F SUBMINIATURE INTERMEDIATE POWER RELAY

File No.:E133481

File No.:R50278397

File No.:CQC09002034521

Features

- 5A switching capability
- TV-3 125VAC approved by UL standard
- 2 Form A slim configuration
- Environmental friendly product (RoHS compliant)
- Outline Dimensions: (24.4 x 12.8 x 24.8) mm

CONTACT DATA

Contact arrangement	2A
Contact resistance	100mΩ max. (at 1A 6VDC)
Contact material	$AgSnO_2$, AgCdO
Contact rating (Res. load)	5A 250VAC/30VDC
Max. switching voltage	250VAC / 30VDC
Max. switching current	5A
Max. switching power	1250VA / 150W
Mechanical endurance	1×10^7OPS
Electrical endurance	5×10^4OPS (5A 250VAC, Resistive load, Room temp., 1s on 9s off)

CHARACTERISTICS

Insulation resistance		1000MΩ (at 500VDC)
Dielectric strength	Between coil & contacts	4000VAC 1min
	Between open contacts	1000VAC 1min
	Between contact sets	2000VAC 1min
Operate time (at nomi. volt.)		15ms max.
Release time (at nomi. volt.)		10ms max.
Humidity		5% to 85% RH
Ambient temperature		-40˚C to 70˚C
Shock resistance	Functional	$98m/s^2$
	Destructive	$980m/s^2$
Vibration resistance		10Hz to 55Hz 1.5mm DA
Termination		PCB
Unit weight		Approx. 14.5g
Construction		Plastic sealed

Notes: 1) The data shown above are initial values.
2) Please find coil temperature curve in the characteristic curves below.
3) UL insulation system: Class A

COIL

Coil power	Approx. 530mW

COIL DATA

at 23˚C

Nominal Voltage VDC	Pick-up Voltage VDC max.	Drop-out Voltage VDC min.	Max. Voltage VDC *	Coil Resistance Ω
5	3.75	0.25	6.5	47 x (1±10%)
6	4.50	0.30	7.8	68 x (1±10%)
9	6.75	0.45	11.7	155 x (1±10%)
12	9.00	0.60	15.6	270 x (1±10%)
18	13.5	0.90	23.4	620 x (1±10%)
24	18.0	1.20	31.2	1080 x (1±10%)
48	36.0	2.40	62.4	4400 x (1±10%)

Notes: *Maximum voltage refers to the maximum voltage which relay coil could endure in a short period of time.

SAFETY APPROVAL RATINGS

UL/CUL	5A 250VAC 5A 30VDC TV-3 125VAC
TÜV	5A 250VAC 5A 30VDC

Notes: 1) All values unspecified are at room temperature.
2) Only typical loads are listed above. Other load specifications can be available upon request.

ORDERING INFORMATION

	HF42F /	012	-2H	S	T	(XXX)
Type						
Coil voltage	5, 6, 9, 12, 18, 24, 48VDC					
Contact arrangement	**2H:** 2 Form A					
Construction 1)	**S:** Plastic sealed					
Contact material	**T:** $AgSnO_2$ **Nil:** AgCdO					
Special code2)	**XXX:** Customer special requirement **Nil:** Standard					

Notes: 1) Contact is recommended for suitable condition and specifications if water cleaning or surface process is involved in assembling relays on PCB.
2) The customer special requirement express as special code after evaluating by Hongfa.

OUTLINE DIMENSIONS, WIRING DIAGRAM AND PC BOARD LAYOUT

Unit: mm

Outline Dimensions

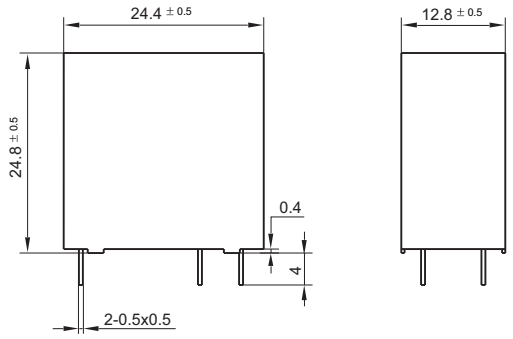

Wiring Diagram

(Bottom view)

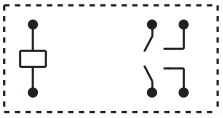

PCB Layout

(Bottom view)

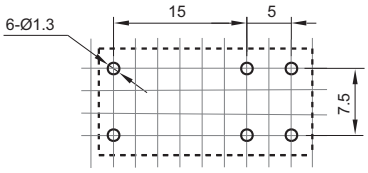

Remark: 1) In case of no tolerance shown in outline dimension: outline dimension ≤1mm, tolerance should be ±0.2mm; outline dimension >1mm and ≤5mm, tolerance should be ±0.3mm; outline dimension >5mm, tolerance should be ±0.4mm.
2) The tolerance without indicating for PCB layout is always ±0.1mm.
3) The width of the gridding is 2.5mm.

CHARACTERISTIC CURVES

MAXIMUM SWITCHING POWER

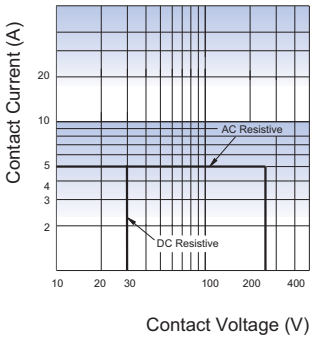

ENDURANCE CURVE

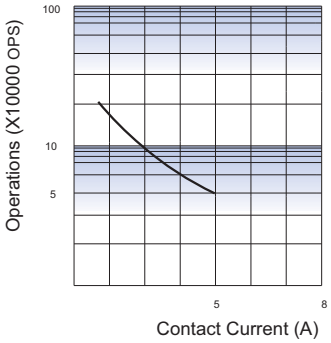

COIL TEMPERATURE RISE

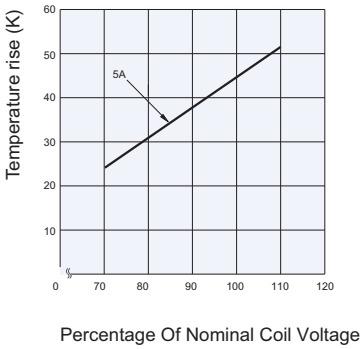

Test conditions:
5A 250VAC, Resistive load,
Room temp., 1s on 9s off

Disclaimer

The specification is for reference only. See to "Terminology and Guidelines" for more information. Specifications subject to change without notice. We could not evaluate all the performance and all the parameters for every possible application. Thus the user should be in a right position to choose the suitable product for their own application. If there is any query, please contact Hongfa for the technical service. However, it is the user's responsibility to determine which product should be used only.