RESET

LUMINIS®

# W767
## ECLIPSE - HID

TYPE: QUANTITY: PROJECT:

| CATALOG NUMBER: | W767 | | | | ELECTRICAL | ELECTRICAL | MOUNTING | ACCESSORIE |
|---|---|---|---|---|---|---|---|---|
| | FIXTURE | WATTAGE | VOLTAGE | FINISH | OPTION | OPTION | OPTION | OPTION |

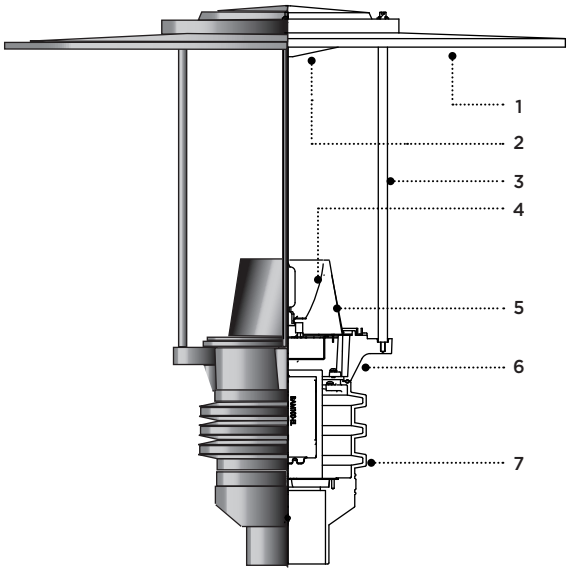


1- One piece .090" thick hard aluminum top shade. Underside surface is painted white enamel to optimize light performance.
2- Inner white enamel reflector.
3- Set of 4 X 1/2" solid aluminum struts.
4- Multi-faceted specular anodized aluminum up light reflector.
5- Sealed reflector housing same color as luminaire.
6- Cast aluminum upper hinged optical chamber housing.
7- Cast aluminum lower electrical chamber housing.

W767

## MATERIALS
Eclipse is made of corrosion resistant 356 aluminum alloy with a copper (CU) content of less than 0.1%.
Set of (4) 1/2" diameter solid aluminum struts.
The upper cast aluminum housing is designed with a tool-less hinged mechanism allowing a quick access for maintenance.
The lower cast aluminum housing fits on a 4" (102) or 5" (127) pole and contains all electrical controls on a removable tray.

## ELECTRICAL
### HIGH INTENSITY DISCHARGE (H.I.D)

**BALLAST** Electronic universal voltage 120V-277V (347V on request) and a power factor greater than 90%. End of life protection with a minimum starting temperature of -4°F/-20°C.

**SOCKET** Medium base pulse rated 4kV porcelain body with a nickel plated screw shell and center contact rated 600V and 200°C leads.

## FINISH
Five-stage preparation process including preheating of cast aluminum parts for air extraction, and an environmentally friendly alloy sealant. Polyester powder coating is applied through an electrostatic process and oven cured for long term finish.

## MOUNTING
Maximum weight: 33lbs (15kg)
Eclipse is designed for ease of access and installation.
Standard luminaire fits on a 4" (102) or 5" (127) pole.
Alternate poles or wall attachments are proposed with high quality components to meet multiple installation conditions.

## CERTIFICATION
Tested to UL1598 and CSA 22.2 #250. ETL listed wet location.
CE certification on request.
Rated IP65.

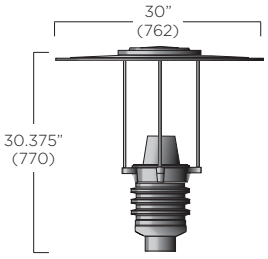


**W767**
EPA: 0.7

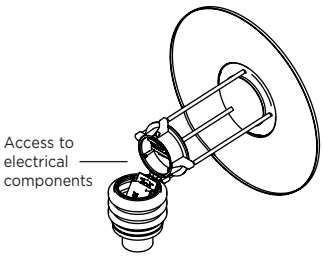


Eclipse features a unique tool-less swing out shade assembly, allowing a quick access to luminaire maintenance, leaving a clean optical chamber to ensure a high lumen performance.

July 2013 Rev 0

**LUMINIS** | Toll free: 866.586.4647 Fax: 514.683.8872
260 Labrosse, Pointe-Claire (QC) Canada H9R 5L5

**LUMINIS.COM**

Luminaires may be altered for design improvement or discontinued without prior notice.
Unless specified, lamps are not included with luminaires.

## TYPICAL PHOTOMETRY SUMMARY

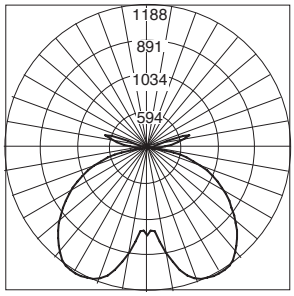


Outdoor report Polar graph
Maximum Candela = 1188 CP

**Descriptive Information**
Total Lms: 4957 Lumens
Total Input Watts: 128 W
Lamps: ED17/Clear Metal Halide
Total efficiency: 55%
BUG Rating: B2-U3-G1
Cutoff classification: Semi-Cutoff
Distribution: Type V

**W767-M100**

Please visit our web site www.luminis.com for complete I.E.S. formatted download data.

## LUMINAIRE SELECTION

**MODEL#**

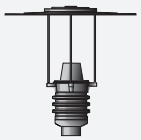

☐ W767

**LAMP SELECTION [1]**

METAL HALIDE
T LAMP TYPE
☐ M39T
☐ M70T
☐ M100T
☐ M150T
(T6/G12 base)

**VOLTAGE [2]**

☐ 120V
☐ 277V
☐ 347V

**FINISH**

STANDARD COLORS

☐ WHT Snow white
☐ BKT Jet black
☐ BZT Bronze
☐ MST Matte silver
☐ GRT Titanium gray
☐ DGT Gun metal
☐ CHT Champagne

OPTIONAL COLORS

☐ CS Custom color
☐ RAL RAL# color

(Refer to color chart)

## OPTIONS

**ELECTRICAL**

☐ **FS** Fuse [3]
☐ **PH** Photocell [3]

**MOUNTING**

☐ **ACA** Pole mounted attachment with 45º support
☐ **ACW** Wall mounted attachment with 45º support
☐ **EC3P** Pole mounted twin arm attachment
☐ **EC3W** Wall mounted twin arm attachment
☐ **TN3** 3" Tenon pole adaptor
☐ **PR7** Pedestal mount adaptor

**NOTES**
**1-** Unless otherwise noted, lamps are by others.
**2-** Luminaires are factory prewired for 120V (if no voltage is specified.) For other voltages, please specify with catalog number, or consult factory.
**3-** Fuse and photo cell options are normally installed with poles when specified with Luminis luminaires. (Except for other types of mounting.)


July 2013 Rev 0



LUMINIS®

**LUMINIS** | Toll free: 866.586.4647 Fax: 514.683.8872
260 Labrosse, Pointe-Claire (QC) Canada H9R 5L5

**LUMINIS.COM**



Luminaires may be altered for design improvement or discontinued without prior notice.
Unless specified, lamps are not included with luminaires.

## POLE MOUNT

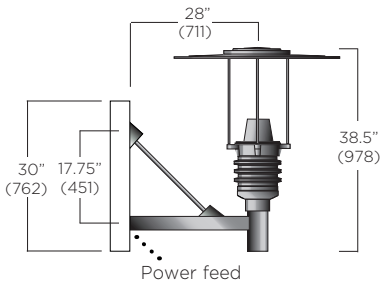


**ACA** [1]
1" X 3" extruded aluminum extended arm pole mounting adaptor designed to fit with 4 to 5" dia. poles. 1/2" dia. X 45º standard natural stainless steel rod support. (EPA: 0.7)

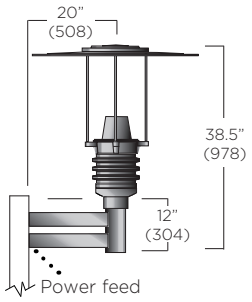


**EC3P** [1]
Set of (2) 1" X 3" extruded aluminum side pole straight mounting. Designed for luminaires with or less shades. Pole mounting adaptor fits with 4 to 5" dia. poles. (EPA: 0.97)

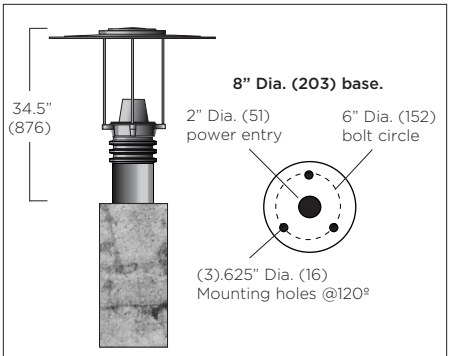


**PR7**
8" Dia.(203) X 8 3/4" (222)H.
extruded aluminum stand designed for short walls or pier mount.

**NOTE 1:** PCA Pole with ACA attachment requires a 30" (762) tenon extension over pole nominal height. EC3P and EC3PS require an 18" tenon extension. Factory installed.

**PSB**
Pole series

**PST**
Pole series

**PAA**
Pole series

## MATCHING POLE SELECTION

| Ø 4" | Ø 5" | Ø 4" | Tapered Pole | Ø 4" | Height |
|---|---|---|---|---|---|
| PAA410 | PAA510 | PST10 | ------- | PSB10 | 10 Ft. (3 M) |
| PAA412 | PAA512 | PST12 | ------- | PSB12 | 12 Ft. (3,6 M) |
| PAA414 | PAA514 | PST14 | ------- | PSB14 | 14 Ft. (4,2 M) |
| PAA416 | PAA516 | PST16 | PTA16 | PSB16 | 16 Ft. (4,8 M) |
| PAA418 | PAA518 | ------- | PTA18 | PSB18 | 18 Ft. (5,5 M) |
| PAA420 | PAA520 | ------- | PTA20 | PSB20 | 20 Ft. (6,0 M) |
| ------- | ------- | ------- | PTA25 | ------- | 25 Ft. (7,6 M) |

For additional pole details, please refer to separate pole specification sheet.
Ø 4"= 100mm Ø5"= 127mm

LUMINIS®

July 2013 Rev 0

**LUMINIS** | Toll free: 866.586.4647 Fax: 514.683.8872
260 Labrosse, Pointe-Claire (QC) H9R 5L5

**LUMINIS.COM**

Luminaires may be altered for design improvement or discontinued without prior notice.
Unless specified, lamps are not included with luminaires.

## WALL MOUNT

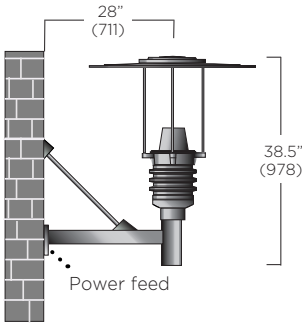


**ACW**
1" X 3" (25X76) extruded aluminum extended arm wall mounting adaptor with cast aluminum covers and galvanized steel mounting plates. 1/2" dia. X 45º standard natural stainless steel rod support.

**Mounting**

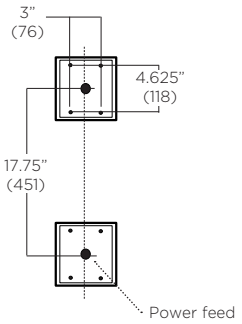


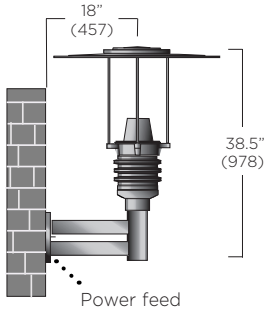


**EC3W**
Set of (2) 1" X 3" (25X76) extruded aluminum wall mount arms with cast aluminum wall plate. Designed for luminaires with or less shades.

**Mounting**

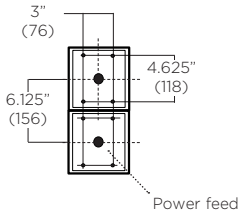





**LUMINIS** | Toll free: 866.586.4647 Fax: 514.683.8872
260 Labrosse, Pointe-Claire (QC) Canada H9R 5L5

**LUMINIS.COM**



Luminaires may be altered for design improvement or discontinued without prior notice.
Unless specified, lamps are not included with luminaires.